MACROFUNCTION LIBRARY

DATABOOK

1st EDITION

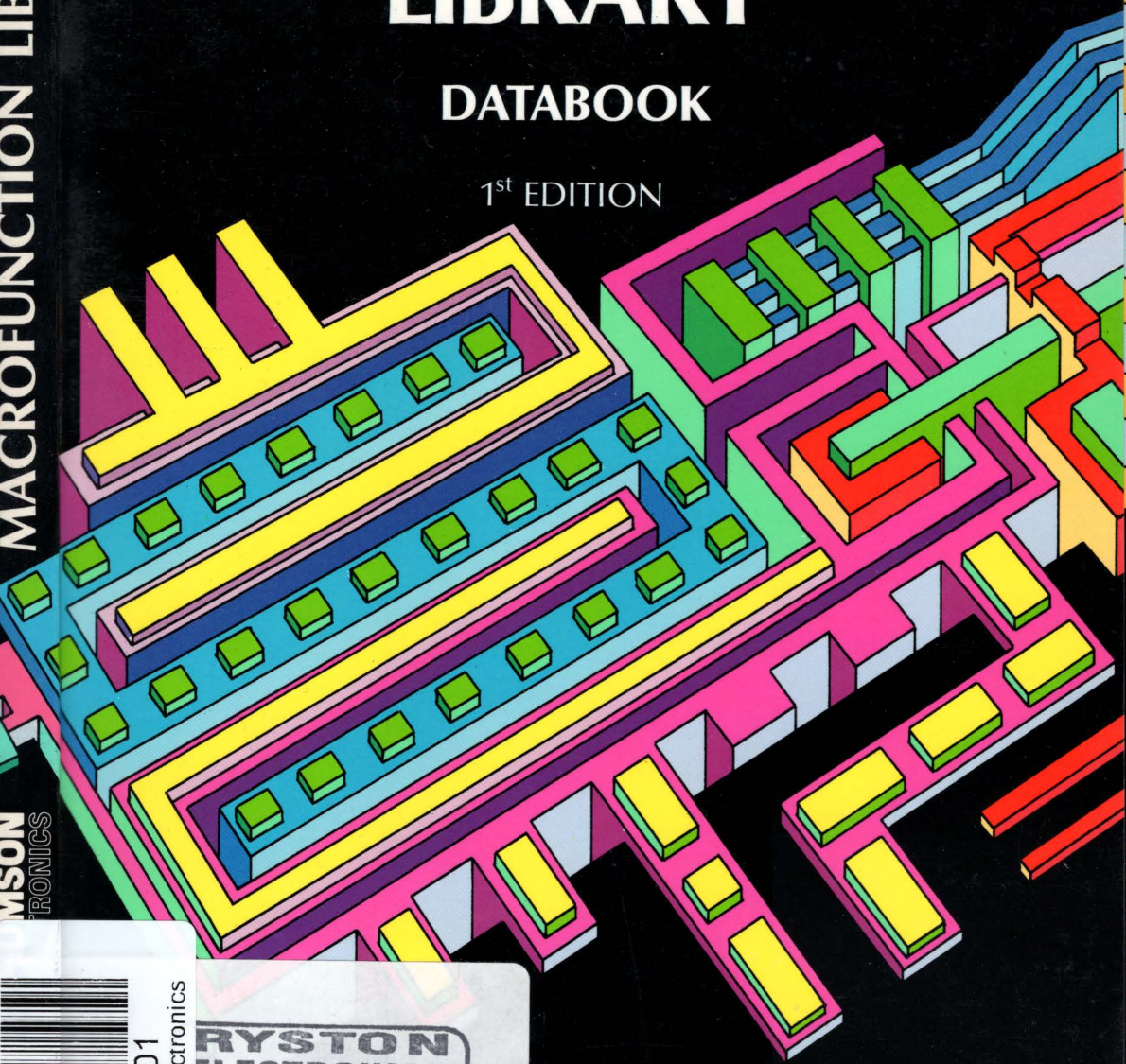

SGS-THOMSON
MICROELECTRONICS

MACROFUNCTION LIBRARY
SGS-THOMSON MICROELECTRONICS

RYSTON
ELECTRONICS
spol. s r.o.
Na hřebenech II 1062
147 00 Praha 4

000501
RYSTON Electronics

MACROFUNCTION LIBRARY

DATABOOK

1st EDITION

MARCH 1991

FOR HCMOS DIGITAL SEMICUSTOM STANDARD CELLS, CONTINUOUS ARRAYS & CHANNELLESS ARRAYS.

USE IN LIFE SUPPORT DEVICES OR SYSTEMS MUST BE EXPRESSLY AUTHORIZED

SGS-THOMSON PRODUCTS ARE NOT AUTHORIZED FOR USE AS CRITICAL COMPONENTS IN LIFE SUPPORT DEVICES OR SYSTEMS WITHOUT THE EXPRESS WRITTEN APPROVAL OF SGS-THOMSON Microelectronics. As used herein:

1. Life support devices or systems are those which (a) are intended for surgical implant into the body, or (b) support or sustain life, and whose failure to perform, when properly used in accordance with instructions for use provided with the product, can be reasonably expected to result in significant injury to the user.
2. A critical component is any component of a life support device or system whose failure to perform can reasonably be expected to cause the failure of the life support device or system, or to affect its safety or effectiveness.

TABLE OF CONTENTS

INTRODUCTION	Page	4
ALPHANUMERICAL INDEX		5
SELECTOR GUIDE		9
MACROFUNCTIONS LIBRARY		17
APPENDIX		205

SGS-THOMSON Microelectronics Semicustom Product Portfolio - 1991

Family	Product	Process	Complexity/ Density	Features
Sea Of Gates	ISB9000	CMOS 1.5µm, DLM	300 to 14,000 Gates	Cost Effective
Sea Of Gates	ISB12000	CMOS 1.2µm, DLM	1,000 to 50,000 Gates	Performance and Density
Sea Of Gates	ISB18000	CMOS 0.8µm, DLM	2,000 to 21,000 Gates	Bus Optimized Array
Standard Cells	CB200	CMOS 1.5µm, DLM	250 Gates/mm^2	
Standard Cells	CB12000	CMOS 1.2µm, DLM	500 Gates/mm^2	Compilers
Analog Arrays	Polyuse K	Bipolar 3µm, SLM	906 Components	3GHz NPN
Mixed A/D Arrays	Polyuse J	Bipolar 3µm, DLM	400-23000 Components	3GHz NPN
Filter Arrays	TSGF	CMOS 3µm, SLM	4 to 12th Order	DC-30KHz
Mixed A/D Standard Cells	TSGSM	CMOS 3.5µm, SLM	1Kgates + Analog	
Mixed A/D Standard Cells	STKM2000	BiCMOS 2µm, DP, DLM	10Kgates + Analog	6GHz NPN

THE COMPANY

SGS-THOMSON Microelectronics is a broad-range supplier of advanced semiconductor products. With extensive manufacturing capability in Europe, North-America and the Far-East, the company is dedicated to meeting customer needs with cost effective, world-class technologies and products.
The company is ranked 12th worldwide in semiconductor suppliers with total 1990 revenues of 1.5 billion dollars (Source: Dataquest 1/91) and over 18000 employees world-wide.
With 17 production locations, 24 design centers and 8 advanced research and development sites, the company continues to demonstrate its commitment to excellence in technology and products. Additionally, with 50 direct sales offices, and over 600 distributors and sales representatives, customers are never far from the service and support needed to be successful in utilizing these products.
With Research and Development expenditure as well as capital investment well above the industry average, SGS-THOMSON Microelectronics is dedicated to bringing an increasing portfolio of innovative and advanced new products with the service level needed to succeed in today's and tomorrow's electronics.
The Digital Semicustom Business Unit offers families of Continuous Arrays including the industry's most advanced bus optimized ISB18000 Series, Channelless Array and Standard Cell. The complete semicustom portfolio includes linear and mixed analog-digital arrays and standard cells.

THE PRODUCTS

Sea Of Gates

The Sea of Gates families include the Continuous Arrays ISB18000 and ISB12000 Series and Channelless Array ISB9000 Series. The ISB18000 Series is the bus optimized array, manufactured in a 0.8 micron, double level metal process featuring true TTL buffers with up to 24 mA current drive capability and interfaces directly to ISA, EISA MCA and SCSI bus architectures. The gate complexity is from 2,500 to 21,000 usable gates and typical 2-input NAND gate delay is 0.45 ns. The ISB18000 will migrate to a 0.7 micron, triple level metal process. The ISB12000 Series is a high performance product manufactured in a 1.2 micron, double level metal process and features a 2-input NAND gate delay of 0.6 ns with total gate count up to 50,000 usable gates. The ISB9000 Series is a general purpose product manufactured in a 1.5 micron, double level metal process and is used for random logic applications up to 14,000 gate complexity.

Standard Cells

The CB12000 Series is a high performance product intended for telecommunications, computer and military applications. Manufactured with a proven 1.2 micron double level metal HCMOS process, the library contains more than 200 SSI elements and module generators for RAM (single and dual port), ROM, multiplier, adder, counter, multiplexer, latch, D-type flip-flop and shift register arrays.
This is a high density standard cell with an equivalent gate complexity of 70,000 gates and built in shrink capability to the next generation 0.7 micron feature size. The internal propagation delay for a 2-input NAND gate with a fanout of 2 is 0.7 ns and internal power consumption is 6 µW/gate/MHz.

ALPHANUMERICAL INDEX

MACROFUNCTIONS

Name	Function	Page
CB4C	4 Bit Binary Counter, Fast, Sync Clear	21
CB4F	4 Bit Binary Counter, Fast, Indiv. Clear Direct, Set Direct	22
CB5C	5 Bit Binary Up Counter, Sync Clear	23
CB5F	5 Bit Binary Up Counter, Fast, Indiv. Clear Direct, Set Direct	24
CB6C	6 Bit Mod 64 Fast Binary Counter, Sync Clear	25
CB6F	6 Bit Mod 64 Fast Binary Counter, Individual Clear Direct, Set Direct	26
CB7C	7 Bit Mod 128 Fast Binary Counter, Sync Clear	27
CB7F	7 Bit Mod 128 Fast Binary Counter, Indiv. Clear Direct, Set Direct	28
CB8C	8 Bit Mod 256 Fast Binary Counter, Sync Clear	29
CB8F	8 Bit Mod 256 Fast Binary Counter, Indiv. Clear Direct, Set Direct	30
CB9C	9 Bit Mod 512 Fast Binary Counter, Sync Clear	31
CB9F	9 Bit Mod 512 Fast Binary Counter, Indiv. Clear Direct, Set Direct	32
CB10C	10 Bit Mod 1024 Fast Binary Counter, Sync Clear	33
CB10F	10 Bit Mod 1024 Fast Binary Counter, Indiv. Clear Direct, Set Direct	34
CB41	4 Bit Binary Counter, Expandable Enable, Clear Direct	35
CB42	4 Bit Binary Counter, Expandable Enable, Sync Clear, Clear Direct	36
CLA1	4 Bit Carry Look Ahead	37
CLA2	4 Bit Carry Look Ahead	38
CMP4	4 Bit Equality Comparator	39
CMP8	8 Bit Equality Comparator	40
CM3B	2 Bit Binary Counter, Clear Direct	41
CM4B	2 Bit Binary Counter, Clear Direct	42
CM4J	2 Bit Johnson Counter, Clear Direct	43
CM5B	3 Bit Binary Counter, Clear Direct	44
CM5SR	3 Bit Shift Counter, Clear Direct	45
CM6B	3 Bit Binary Counter, Clear Direct	46
CM6J	3 Bit Johnson Counter, Clear Direct	47
CM7B	3 Bit Binary Counter, Clear Direct	48
CM8B	3 Bit Binary Counter, Clear Direct	49
CM8J	4 Bit Johnson Counter, Clear Direct	50
CM8SR	3 Bit Shift Counter, Clear Direct	51
CM9B	4 Bit Binary Counter, Clear Direct	52
CM9SR	4 Bit Shift Counter, Clear Direct	53
CM10B	4 Bit Binary Counter, Clear Direct	54
CM10J	5 Bit Johnson Counter, Clear Direct	55
CM10SR	4 Bit Shift Counter, Clear Direct	56
CM11B	4 Bit Binary Counter, Clear Direct	57
CM12B	4 Bit Binary Counter, Clear Direct	58
CM12J	6 Bit Johnson Counter, Clear Direct	59
CM12SR	4 Bit Shift Counter, Clear Direct	60
CM13B	4 Bit Binary Counter, Clear Direct	61
CM14B	4 Bit Binary Counter, Clear Direct	62
CM14J	7 Bit Johnson Counter, Clear Direct	63
CM15B	4 Bit Binary Counter, Clear Direct	64
CM16B	4 Bit Binary Counter, Clear Direct	65
CM16J	8 Bit Johnson Counter, Clear Direct	66
CM17B	5 Bit Binary Counter, Clear Direct	67
CUD41	4 Bit U/D Counter, Expandable	68

ALPHANUMERICAL INDEX

MACROFUNCTIONS (Cont'd)

Name	Function	Page
CUD42	4 Bit U/D Counter, Expandable, Async Load and Clear	69
C2G	2 Bit Gray Counter, Clear Direct	70
C3G	3 Bit Gray Counter, Clear Direct	71
C4G	4 Bit Gray Counter, Prescaled Clear Direct	72
C5G	5 Bit Gray Counter, Prescaled Clear Direct	73
C6G	6 Bit Mod 64 Gray Counter, Prescaled Clear Direct	74
C7G	7 Bit Mod 128 Gray Counter, Prescaled Clear Direct	75
C8G	8 Bit Mod 256 Gray Counter, Prescaled Clear Direct	76/77
C3LSR	3 Bit Linear Feedback Shift Register	78
C4LSR	4 Bit Linear Feedback Shift Register	79
C5LSR	5 Bit Linear Feedback Shift Register	80
C6LSR	6 Bit Mod 63 Linear Feedback Shift Register	81
C7LSR	7 Bit Mod 127 Linear Feedback Shift Register	82
C8LSR	8 Bit Mod 255 Linear Feedback Shift Register	83
C9LSR	9 Bit Mod 511 Linear Feedback Shift Register	84
C10LSR	10 Bit Mod 1023 Linear Feedback Shift Register	85
C11LSR	11 Bit Mod 2047 Linear Feedback Shift Register	86
C12LSR	12 Bit Mod 4095 Linear Feedback Shift Register	87
C13LSR	13 Bit Mod 8191 Linear Feedback Shift Register	88
C14LSR	14 Bit Mod 16383 Linear Feedback Shift Register	89
C15LSR	15 Bit Mod 32767 Linear Feedback Shift Register	90
C16LSR	16 Bit Mod 65535 Linear Feedback Shift Register	91
C17LSR	17 Bit Mod 131071 Linear Feedback Shift Register	92
C18LSR	18 Bit Mod 262143 Linear Feedback Shift Register	93
C19LSR	19 Bit Mod 524287 Linear Feedback Shift Register	94
C20LSR	20 Bit Mod 1048575 Linear Feedback Shift Register	95
DM6JH	Spike Free Decoder For Mod 6 Johnson Counter, Active High	96
DM6JL	Spike Free Decoder For Mod 6 Johnson Counter, Active Low	97
DM8JH	Spike Free Decoder For Mod 8 Johnson Counter, Active High	98
DM8JL	Spike Free Decoder For Mod 8 Johnson Counter, Active Low	99
DM10JH	Spike Free Decoder For Mod 10 Johnson Counter, Active High	100
DM10JL	Spike Free Decoder For Mod 10 Johnson Counter, Active Low	101
DM12JH	Spike Free Decoder For Mod 12 Johnson Counter, Active High	102
DM12JL	Spike Free Decoder For Mod 12 Johnson Counter, Active Low	103
DM14JH	Spike Free Decoder For Mod 14 Johnson Counter, Active High	104
DM14JL	Spike Free Decoder For Mod 14 Johnson Counter, Active Low	105
DM16JH	Spike Free Decoder For Mod 16 Johnson Counter, Active High	106
DM16JL	Spike Free Decoder For Mod 16 Johnson Counter, Active Low	107
D24GH	2 to 4 Decoder, Gated Outputs Active High	108
D24GL	2 to 4 Decoder, Gated Outputs Active Low	109
D24H	2 to 4 Decoder, Outputs Active High	110
D24L	2 to 4 Decoder, Outputs Active Low	111
D38GH	3 to 8 Decoder, Gated Outputs Active High	112
D38GL	3 to 8 Decoder, Gated Outputs Active Low	113
D38H	3 to 8 Decoder Outputs Active High	114
D38L	3 to 8 Decoder Outputs Active Low	115
D410H	4 to 10 Decoder, Outputs Active High	116
D410L	4 to 10 Decoder, Outputs Active Low	117

ALPHANUMERICAL INDEX

MACROFUNCTIONS (Cont'd)

Name	Function	Page
FAS2	2 Bit Binary Adder Subtracter, A + B, A − B	118
FA1	Full Adder	119
FA2	2 Bit Binary Adder (7482)	120
FA4	4 Bit Binary Adder	121
FA16	16 Bit Fast Binary Adder (Using CLA1, CLA2, FA4)	122
HA1	Half Adder	123
L4	4 Bit Data Latch	124
L8	8 Bit Data Latch	125
MAG2	2 Bit Magnitude Comparator Expandable (1/2 7485)	126
MAG2H	2 Bit Magnitude Comparator	127
MAG4	4 Bit Magnitude Comparator Expandable (7485)	128
MR41	4 Bit Register with 2 Bit Muxed Inputs	129
MR42	4 Bit Register with 2 Bit Muxed Inputs, Clear Direct	130
MR43	4 Bit Register with 2 Bit Muxed Inputs, Sync Clear	131
MR44	4 Bit Register with 2 Bit Muxed Inputs, Sync Clear, Clear Direct	132
MR81	8 Bit Register with 2 Bit Muxed Inputs	133
MR82	8 Bit Register with 2 Bit Muxed Inputs, Clear Direct	134
MUX22H	Dual 2 Bit Non Inverting Mux	135
MUX24H	Quad 2 Bit Non Inverting Mux	136
MUX24L	Quad 2 Bit Inverting Mux	137
MUX31H	3 Bit Non Inverting Mux	138
MUX31L	3 Bit Inverting Mux	139
MUX32H	Dual 3 Bit Non Inverting Mux	140
MUX34H	Quad 3 Bit Non Inverting Mux	141
MUX41GH	4 Bit Non Inverting Mux, Gated	142
MUX41H	4 Bit Non Inverting Mux	143
MUX41L	4 Bit Inverting Mux	144
MUX42H	Dual 4 Bit Non Inverting Mux	145
MUX44H	Quad 4 Bit Non Inverting Mux	146
MUX51H	5 Bit Non Inverting Mux	147
MUX51L	5 Bit Inverting Mux	148
MUX52H	Dual 5 Bit Non Inverting Mux	149
MUX54H	Quad 5 Bit Non Inverting Mux	150
MUX61H	6 Bit Non Inverting Mux	151
MUX61L	6 Bit Inverting Mux	152
MUX62H	Dual 6 Bit Non Inverting Mux	153
MUX64H	Quad 6 Bit Non Inverting Mux	154
MUX71H	7 Bit Non Inverting Mux	155
MUX71L	7 Bit Inverting Mux	156
MUX72H	Dual 7 Bit Non Inverting Mux	157
MUX74H	Quad 7 Bit Non Inverting Mux	158
MUX81H	8 Bit Non Inverting Mux Cell	159
MUX82H	Dual 8 Bit Non Inverting Mux	160
MUX84H	Quad 8 Bit Non Inverting Mux	161
M42C	BCD to Decimal Decoder (7442)	162
M82C	2 Bit Binary Full Adder (7482)	163
M85C	4 Bit Magnitude Comparator (7485)	164
M138C	Gated 3 to 8 Binary Decoder (74138)	165

ALPHANUMERICAL INDEX

MACROFUNCTIONS (Cont'd)

Name	Function	Page
M138D	3 to 8 Decoder, Gated Outputs, Active Low (74138)	166
M150C	Gated 16 Input Mux	167
M151C	Gated 8 Input Mux	168
M152C	8 Input Mux	169
M153C	Gated Dual 4 Input Mux	170
M157C	4×2 Mux	171
M158C	4×2 Mux, Outputs Active Low	172
M160C	4 Bit BCD Counter	173
M160D	4 Bit BCD Counter	174
M161C	4 Bit Counter	175
M161D	Sync 4 Bit Binary Counter	176
M162C	4 Bit BCD Counter	177
M162D	4 Bit BCD Counter	178
M163C	4 Bit Counter	179
M163D	4 Bit Binary Counter	180
M163F	4 Bit Counter Fast	181
M169C	4 Bit U/D Counter	182
M244C	Octal Tristate Buffer on Chip (SN74244)	183
M244XC	Octal Tristate Buffer off Chip (SN74244)	184
M2901	4 Bit/ALU	185
PAR8	8 Bit Odd Parity Detector	186
PAR9	9 Bit Odd Parity Detector	187
PS2	2 Bit External Clock Prescaler	188
PS3	3 Bit External Clock Prescaler	189
PS4	4 Bit External Clock Prescaler	190
R41	4 Bit Data Register	191
R42	4 Bit Data Register, Clear Direct	192
R81	8 Bit Data Register	193
R82	8 Bit Data Register, Clear Direct	194
SR41	4 Bit Shift Register	195
SR42	4 Bit Shift Register, Clear Direct	196
SR43	4 Bit Shift Register, Set Direct	197
SR44	4 Bit Shift Register, Sync Load	198
SR45	4 Bit Shift Register, Sync Load and Clear	199
SR46	4 Bit Shift Register, Async Parallel Load	200
SR47	4 Bit Shift Register, Sync Clear	201
SYNC01	Synchronizer For Asynchronous 0 to 1 Event	202
SYNC10	Synchronizer For Asynchronous 1 to 0 Event	203

SELECTOR GUIDE

SELECTOR GUIDE

MACROFUNCTIONS

Name	Function	Page

ADDERS

CLA1	4 Bit Carry Look Ahead	37
CLA2	4 Bit Carry Look Ahead	38
HA1	Half Adder	123
FA1	Full Adder	119
FA2	2 Bit Binary Adder	120
FA4	4 Bit Binary Adder	121
FA16	16 Bit Fast Binary Adder	122
FAS2	2 Bit Binary Adder Subtractor	118

ALU

M2901	4 Bit ALU	185

COMPARATORS

MAG2H	2 Bit Magnitude Comparator	127
MAG2	2 Bit Magnitude Comparator Expandable	126
MAG4	4 Bit Magnitude Comparator Expandable	128
CMP4	4 Bit Equality Comparator	39
CMP8	8 Bit Equality Comparator	40

PARITY GENERATORS

PAR8	8 Bit Odd Parity Detector	186
PAR9	9 Bit Odd Parity Detector	187

LATCH REGISTERS

L4	4 Bit Data Latch	124
L8	8 Bit Data Latch	125

MULTIPLEXER REGISTERS

MR41	4 Bit Register with 2 Bit Muxed Inputs	129
MR42	4 Bit Register with 2 Bit Muxed Inputs, Clear Direct	130
MR43	4 Bit Register with 2 Bit Muxed Inputs, Sync Clear	131
MR44	4 Bit Register with 2 Bit Muxed Inputs, Sync Clear, Clear Direct	132
MR81	8 Bit Register with 2 Bit Muxed Inputs	133
MR82	8 Bit Register with 2 Bit Muxed Inputs, Clear Direct	134

FLIP-FLOP REGISTERS

R41	4 Bit Data Register	191
R42	4 Bit Data Register, Clear Direct	192
R81	8 Bit Data Register	193
R82	8 Bit Data Register, Clear Direct	194

SELECTOR GUIDE

MACROFUNCTIONS (Cont'd)

Name	Function	Page

SHIFT REGISTERS

SR41	4 Bit Shift Register	195
SR42	4 Bit Shift Register, Clear Direct	196
SR43	4 Bit Shift Register, Set Direct	197
SR44	4 Bit Shift Register, Sync Load	198
SR45	4 Bit Shift Register, Sync Load and Clear	199
SR46	4 Bit Shift Register, Async Parallel Load	200
SR47	4 Bit Shift Register, Sync Clear	201

MODULO 2 COUNTERS

PS2	2 Bit External Clock Prescaler	188

MODULO 3 COUNTERS

CM3B	2 Bit Binary Counter, Clear Direct	41
PS3	3 Bit External Clock Prescaler	189

MODULO 4 COUNTERS

CM4J	2 Bit Johnson Counter, Clear Direct	43
C2G	2 Bit Gray Counter, Clear Direct	70
CM4B	2 Bit Binary Counter, Clear Direct	42
PS4	4 Bit External Clock Prescaler	190

MODULO 5 COUNTERS

CM5B	3 Bit Binary Counter, Clear Direct	44
CM5SR	3 Bit Shift Counter, Clear Direct	45

MODULO 6 COUNTERS

CM6B	3 Bit Binary Counter, Clear Direct	46
CM6J	3 Bit Johnson Counter, Clear Direct	47

MODULO 7 COUNTERS

C3LSR	3 Bit Linear Feedback Shift Register	78
CM7B	3 Bit Binary Counter, Clear Direct	48

MODULO 8 COUNTERS

CM8J	4 Bit Johnson Counter, Clear Direct	50
C3G	3 Bit Gray Counter, Clear Direct	71
CM8SR	3 Bit Shift Counter, Clear Direct	51
CM8B	3 Bit Binary Counter, Clear Direct	49

MODULO 9 COUNTERS

CM9SR	4 Bit Shift Counter, Clear Direct	53
CM9B	4 Bit Binary Counter, Clear Direct	52

SELECTOR GUIDE

MACROFUNCTIONS (Cont'd)

Name	Function	Page

MODULO 10 COUNTERS

CM10J	5 Bit Johnson Counter, Clear Direct	55
CM10SR	4 Bit Shift Counter, Clear Direct	56
CM10B	4 Bit Binary Counter, Clear Direct	54
M160C	4 Bit BCD Counter	173
M160D	4 Bit BCD Counter	174
M162C	4 Bit BCD Counter	177
M162D	4 Bit BCD Counter	178

MODULO 11 COUNTERS

CM11B	4 Bit Binary Counter, Clear Direct	57

MODULO 12 COUNTERS

CM12J	6 Bit Johnson Counter, Clear Direct	59
CM12SR	4 Bit Shift Counter, Clear Direct	60
CM12B	4 Bit Binary Counter, Clear Direct	58

MODULO 13 COUNTERS

CM13B	4 Bit Binary Counter, Clear Direct	61

MODULO 14 COUNTERS

CM14J	7 Bit Johnson Counter, Clear Direct	63
CM14B	4 Bit Binary Counter, Clear Direct	62

MODULO 15 COUNTERS

C4LSR	4 Bit Linear Feedback Shift Register	79
CM15B	4 Bit Binary Counter, Clear Direct	64

MODULO 16 COUNTERS

CB41	4 Bit Binary Counter, Expandable Enable	35
CB42	4 Bit Binary Counter, Expandable Enable, Sync, Clear, Clear Direct	36
CB4C	4 Bit Binary Up Counter, Fast, Sync, Clear	21
CB4F	4 Bit Binary Up Counter, Fast, Individual	22
CM16J	8 Bit Johnson Counter, Clear Direct	66
C4G	4 Bit Gray Counter, Prescaled Clear Direct	72
CM16B	4 Bit Binary Counter, Clear Direct	65
CUD41	4 Bit U/D Counter, Expandable Clear Direct	68
CUD42	4 Bit U/D Counter, Expandable, Async Load	69
M161C	4 Bit Counter	175
M161D	4 Bit Binary Counter	176
M163C	4 Bit Counter	179
M163D	4 Bit Binary Counter	180
M163F	4 Bit Counter, Fast	181
M169C	4 Bit U/D Counter	182

SELECTOR GUIDE

MACROFUNCTIONS (Cont'd)

Name	Function	Page

MODULO 17 COUNTERS

CM17B	5 Bit Binary Counter, Clear Direct	67

MODULO 31 COUNTERS

C5LSR	5 Bit Linear Feedback Shift Register	80

MODULO 32 COUNTERS

CB5C	5 Bit Binary Up Counter, Sync, Clear	23
CB5F	5 Bit Binary Up Counter, Fast, Individual Clear Direct, Set Direct	24
C5G	5 Bit Gray Counter, Prescaled Clear Direct	73

LARGE MODULO COUNTERS

C6LSR	6 Bit Mod 63 Linear Feedback Shift Register	81
CB6C	6 Bit Mod 64 Fast Binary Counter, Sync Clear	25
CB6F	6 Bit Mod 64 Fast Binary Counter, Individual Clear Direct, Set Direct	26
C6G	6 Bit Mod 64 Gray Counter, Prescaled Clear Direct	74
C7LSR	7 Bit Mod 127 Linear Feedback Shift Register	82
CB7C	7 Bit Mod 128 Fast Binary Counter, Sync Clear	27
CB7F	7 Bit Mod 128 Fast Binary Counter, Individual Clear Direct, Set Direct	28
C7G	7 Bit Mod 128 Gray Counter, Prescaled Clear Direct	75
C8LSR	8 Bit Mod 255 Linear Feedback Shift Register	83
CB8C	8 Bit Mod 256 Fast Binary Counter, Sync Clear	29
CB8F	8 Bit Mod 256 Fast Binary Counter, Individual Clear Direct, Set Direct	30
C8G	8 Bit Mod 256 Gray Counter, Prescaled Clear Direct	76/77
C9LSR	9 Bit Mod 511 Linear Feedback Shift Register	84
CB9C	9 Bit Mod 512 Fast Binary Counter, Sync Clear	31
CB9F	9 Bit Mod 512 Fast Binary Counter, Individual Clear Direct, Set Direct	32
C10LSR	10 Bit Mod 1023 Linear Feedback Shift Register	85
CB10C	10 Bit Mod 1024 Fast Binary Counter, Sync Clear	33
CB10F	10 Bit Mod 1024 Fast Binary Counter, Individual Clear Direct, Set Direct	34
C11LSR	11 Bit Mod 2047 Linear Feedback Shift Register	86
C12LSR	12 Bit Mod 4095 Linear Feedback Shift Register	87
C13LSR	13 Bit Mod 8191 Linear Feedback Shift Register	88
C14LSR	14 Bit Mod 16383 Linear Feedback Shift Register	89
C15LSR	15 Bit Mod 32767 Linear Feedback Shift Register	90
C16LSR	16 Bit Mod 65535 Linear Feedback Shift Register	91
C17LSR	17 Bit Mod 131071 Linear Feedback Shift Register	92
C18LSR	18 Bit Mod 262143 Linear Feedback Shift Register	93
C19LSR	19 Bit Mod 524287 Linear Feedback Shift Register	94
C20LSR	20 Bit Mod 1048575 Linear Feedback Shift Register	95

SELECTOR GUIDE

MACROFUNCTIONS (Cont'd)

Name	Function	Page
MULTIPLEXERS		
MUX31H	3 Bit Non Inverting Mux	138
MUX31L	3 Bit Inverting Mux	139
MUX41H	4 Bit Non Inverting Mux	143
MUX41GH	4 Bit Non Inverting Mux, Gated	142
MUX41L	4 Bit Inverting Mux	144
MUX51H	5 Bit Non Inverting Mux	147
MUX51L	5 Bit Inverting Mux	148
MUX61H	6 Bit Non Inverting Mux	151
MUX61L	6 Bit Inverting Mux	152
MUX71H	7 Bit Non Inverting Mux	155
MUX71L	7 Bit Inverting Mux	156
MUX81H	8 Bit Non Inverting Mux	159
MUX22H	Dual 2 Bit Non Inverting Mux	135
MUX32H	Dual 3 Bit Non Inverting Mux	140
MUX42H	Dual 4 Bit Non Inverting Mux	145
MUX52H	Dual 5 Bit Non Inverting Mux	149
MUX62H	Dual 6 Bit Non Inverting Mux	153
MUX72H	Dual 7 Bit Non Inverting Mux	157
MUX82H	Dual 8 Bit Non Inverting Mux	160
MUX24H	Quad 2 Bit Non Inverting Mux	136
MUX24L	Quad 2 Bit Inverting Mux	137
MUX34H	Quad 3 Bit Non Inverting Mux	141
MUX44H	Quad 4 Bit Non Inverting Mux	146
MUX54H	Quad 5 Bit Non Inverting Mux	150
MUX64H	Quad 6 Bit Non Inverting Mux	154
MUX74H	Quad 7 Bit Non Inverting Mux	158
MUX84H	Quad 8 Bit Non Inverting Mux	161
DECODERS		
D24H	2 to 4 Decoder, Outputs Active High	110
D24L	2 to 4 Decoder, Outputs Active Low	111
D38H	3 to 8 Decoder, Outputs Active High	114
D38L	3 to 8 DeCoder, Outputs Active Low	115
D24GH	2 to 4 Decoder, Gated Outputs Active High	108
D24GL	2 to 4 Decoder, Gated Outputs Active Low	109
D38GH	3 to 8 Decoder, Gated Outputs Active High	112
D38GL	3 to 8 Decoder, Gated Outputs Active Low	113
D410H	4 to 10 Decoder, Outputs Active High	116
D410L	4 to 10 Decoder, Outputs Active Low	117
DM6JH	Spike Free Decoder For Mod 6 Johnson Coder, Active High	96
DM6JL	Spike Free Decoder For Mod 6 Johnson Coder, Active Low	97
DM8JH	Spike Free Decoder For Mod 8 Johnson Coder, Active High	98
DM8JL	Spike Free Decoder For Mod 8 Johnson Coder, Active Low	99
DM10JH	Spike Free Decoder For Mod 10 Johnson Coder Active High	100
DM10JL	Spike Free Decoder For Mod 10 Johnson Coder, Active Low	101
DM12JH	Spike Free Decoder For Mod 12 Johnson Coder, Active High	102
DM12JL	Spike Free Decoder For Mod 12 Johnson Coder, Active Low	103

SELECTOR GUIDE

MACROFUNCTIONS (Cont'd)

Name	Function	Page

DECODERS (Cont'd)

DM14JH	Spike Free Decoder For Mod 14 Johnson Coder, Active High	104
DM14JL	Spike Free Decoder For Mod 14 Johnson Coder, Active Low	105
DM16JH	Spike Free Decoder For Mod 16 Johnson Coder, Active High	106
DM16JL	Spike Free Decoder For Mod 16 Johnson Coder, Active Low	107

SYNCHRONIZERS

SYNC01	Synchronizer For Asynchronous 0 to 1 Event	202
SYNC10	Synchronizer For Asynchronous 1 to 0 Event	203

74XX TTL MSI

M42C	BCD to Decimal Decoder (7442)	162
M82C	2 Bit Binary Full Adder (7482)	163
M85C	4 Bit Magnitude Comparator (7485)	164
M138C	Gated 3 to 8 Binary Decoder (74138)	165
M138D	3 to 8 Decoder, Gated Outputs, Active Low (74138)	166
M150C	Gated 16 Input Mux	167
M151C	Gated 8 Input Mux	168
M152C	8 Input Mux	169
M153C	Gated Dual 4 Input Mux	170
M157C	4×2 Mux	171
M158C	4×2 Mux, Outputs Active Low	172
M160C	4 Bit BCD Counter	173
M160D	4 Bit BCD Counter	174
M161C	4 Bit Counter	175
M161D	Sync 4 Bit Counter	176
M162C	4 Bit BCD Counter	177
M162D	4 Bit BCD Counter	178
M163C	4 Bit Counter	179
M163D	4 Bit Binary Counter	180
M163F	4 Bit Counter Fast	181
M169C	4 Bit U/D Counter	182
M244C	Octal Tristate Buffer On Chip (SN 74244)	183
M244XC	Octal Tristate Buffer Off Chip (SN 74244)	184
M2901	4 Bit/ALU	185

MACROFUNCTIONS

MACROFUNCTIONS

The information presented for each macrofunction is explained below

① The macrofunction name.

② The functional description.

③ The network schematic.

④ The logic diagram.

A truth table is shown for some macrofunctions and in addition the number of gates used to calculate design complexity for each macrofunction is listed in Appendix I. The calling sequence for each macrofunction is listed in Appendix II, and gate count equivalents for CMOS 4000 series and TTL 7400 series families are listed in Appendix III.

The 203 macrofunctions contained in this databook are available for the following products:

ISB12000 SERIES Continuous Arrays
ISB18000 SERIES Continuous Arrays
CB12000 SERIES Standard Cells
ISB9000 SERIES Channelless Arrays.

Separate databooks for the macrocell libraries of each of these products are available from your local SGS-THOMSON sales representative.

System designers can realise their designs on the SGS-THOMSON proprietary CONCERT design system or on the following third party engineering workstations:

Mentor Graphics
Valid Logic Systems
Racal Redac

External design tools such as Verilog XL, System Hilo and Synopsys are also supported.

CB5F ❷ 5 BIT BINARY UP COUNTER FAST, INDIVIDUAL CD SD

CB5F ❶

❸ NETWORK SCHEMATIC

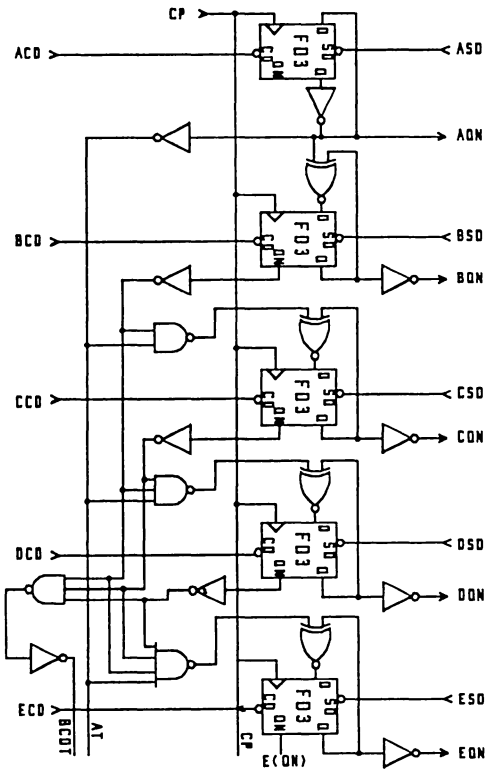

❹ LOGIC DIAGRAM

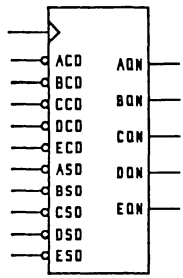

CB4C — 4 BIT BINARY UP COUNTER FAST, SYNC CLEAR — CB4C

NETWORK SCHEMATIC

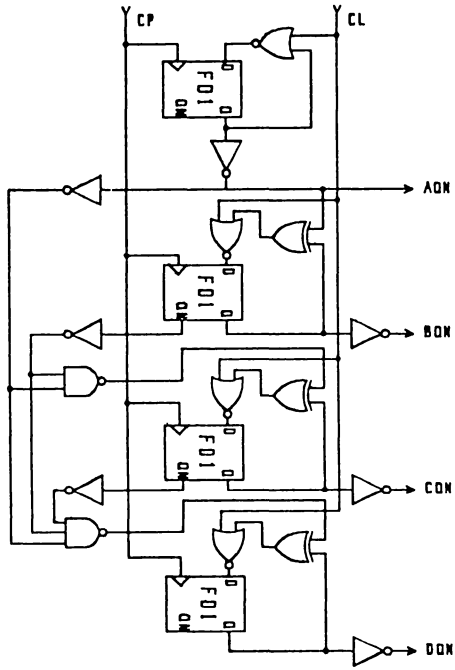

LOGIC DIAGRAM

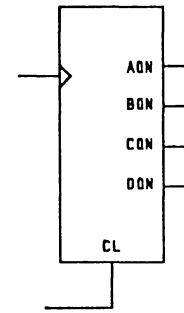

CB4F — 4 BIT BINARY UP COUNTER FAST, INDIVIDUAL CD SD — CB4F

NETWORK SCHEMATIC

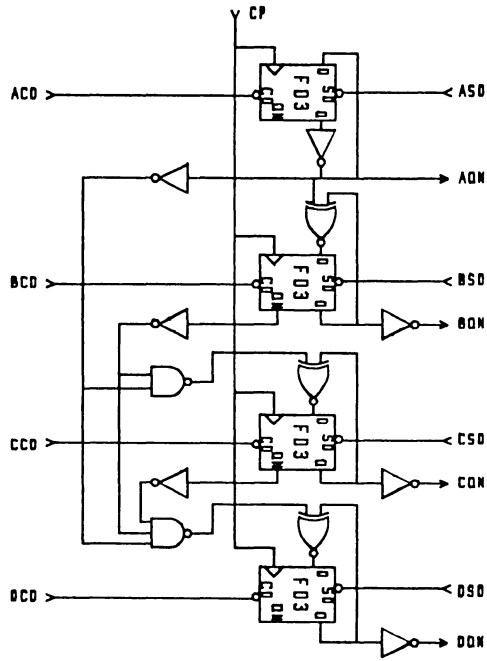

LOGIC DIAGRAM

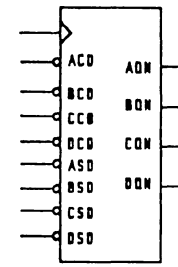

CB5C — 5 BIT BINARY UP COUNTER FAST, SYNC CLEAR — CB5C

NETWORK SCHEMATIC

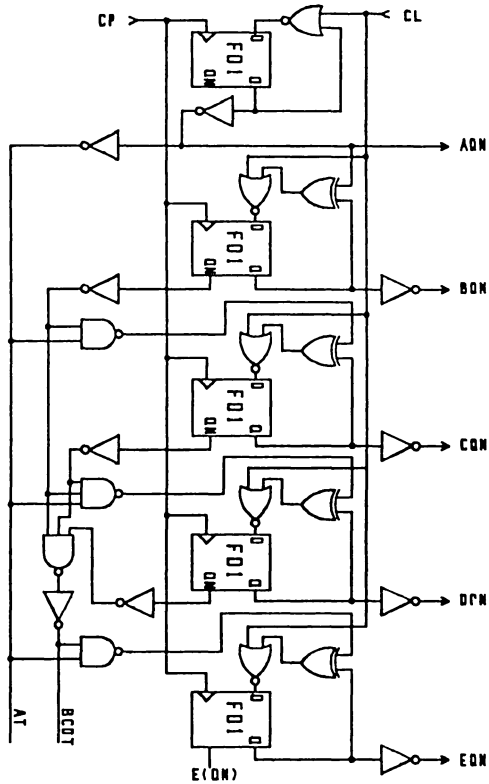

LOGIC DIAGRAM

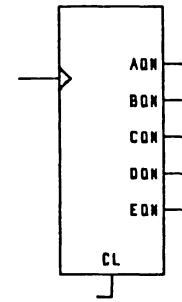

CB5F — 5 BIT BINARY UP COUNTER FAST, INDIVIDUAL CD SD — CB5F

NETWORK SCHEMATIC

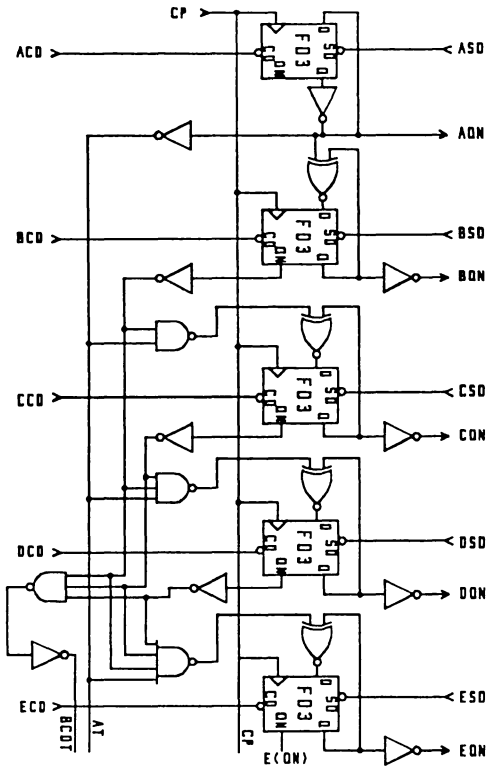

LOGIC DIAGRAM

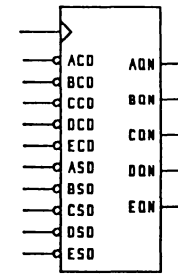

CB6C — 6 BIT BINARY UP COUNTER FAST, SYNC CLEAR — CB6C

NETWORK SCHEMATIC

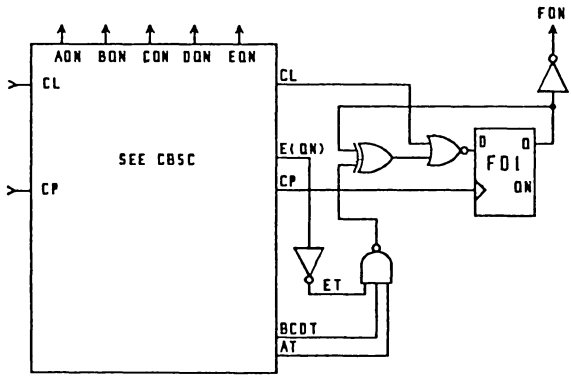

LOGIC DIAGRAM

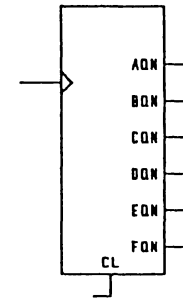

CB6F — 6 BIT BINARY UP COUNTER FAST, INDIVIDUAL CD SD — CB6F

NETWORK SCHEMATIC

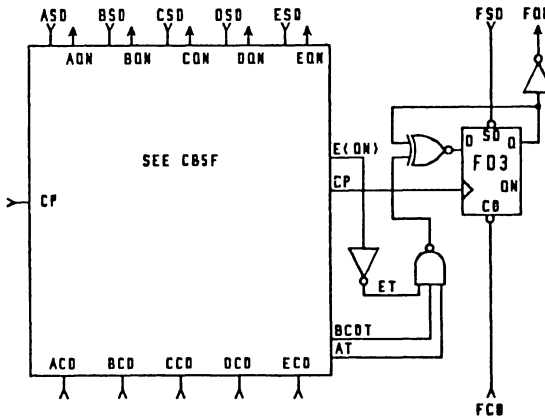

LOGIC DIAGRAM

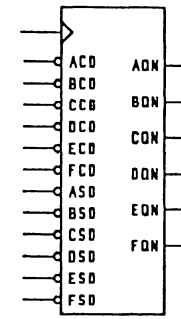

CB7C — 7 BIT BINARY UP COUNTER FAST, SYNC CLEAR — CB7C

NETWORK SCHEMATIC

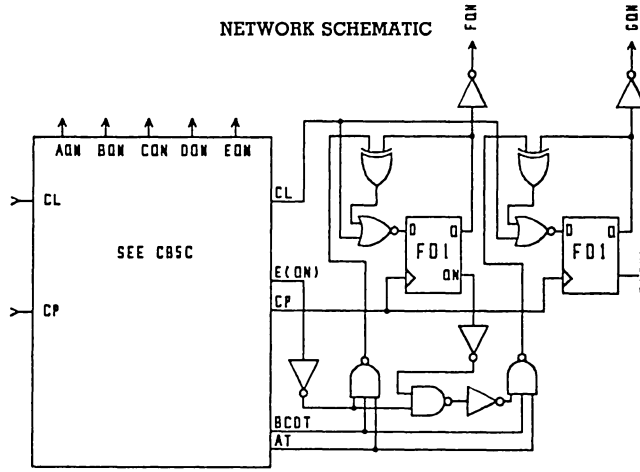

LOGIC DIAGRAM

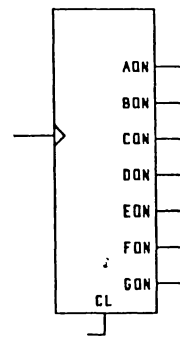

CB7F	7 BIT BINARY UP COUNTER FAST, INDIVIDUAL CD SD	CB7F

NETWORK SCHEMATIC

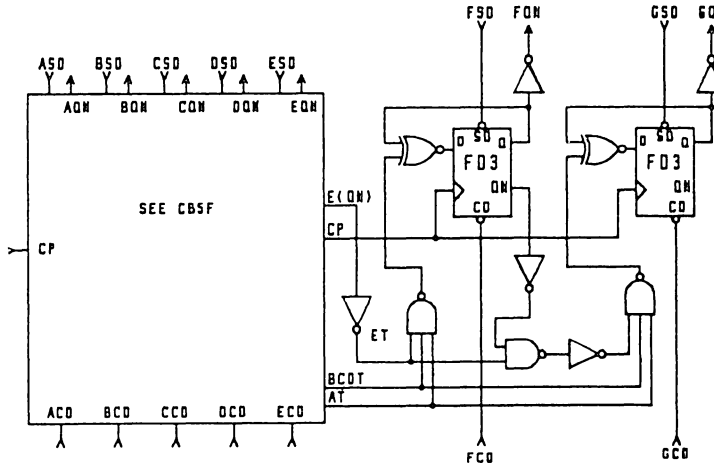

LOGIC DIAGRAM

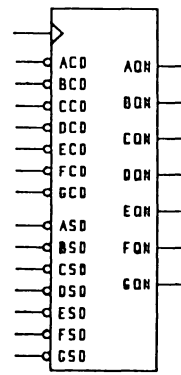

CB8C — 8 BIT BINARY UP COUNTER FAST, SYNC CLEAR — CB8C

NETWORK SCHEMATIC

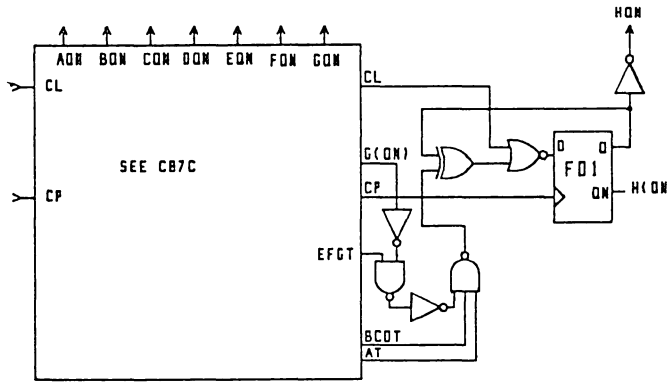

LOGIC DIAGRAM

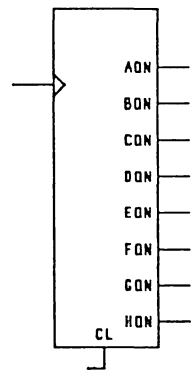

CB8F — 8 BIT BINARY UP COUNTER FAST, INDIVIDUAL CD SD — CB8F

NETWORK SCHEMATIC

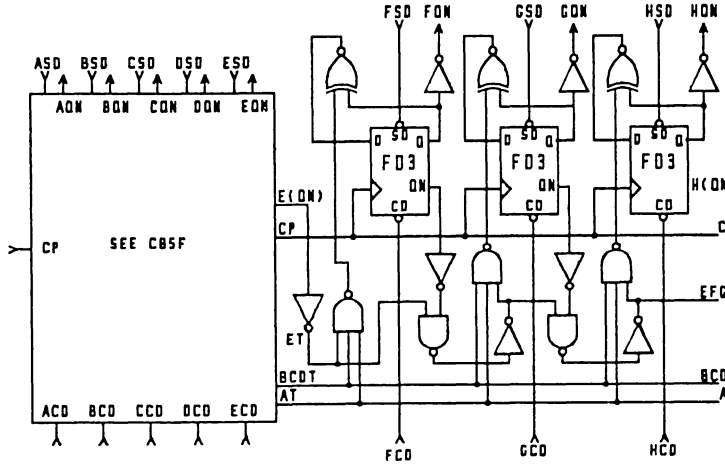

LOGIC DIAGRAM

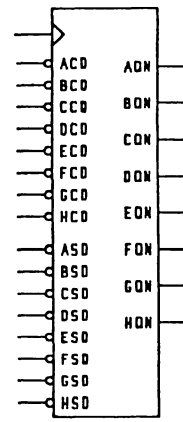

CB9C — 9 BIT BINARY UP COUNTER FAST, SYNC CLEAR — CB9C

NETWORK SCHEMATIC

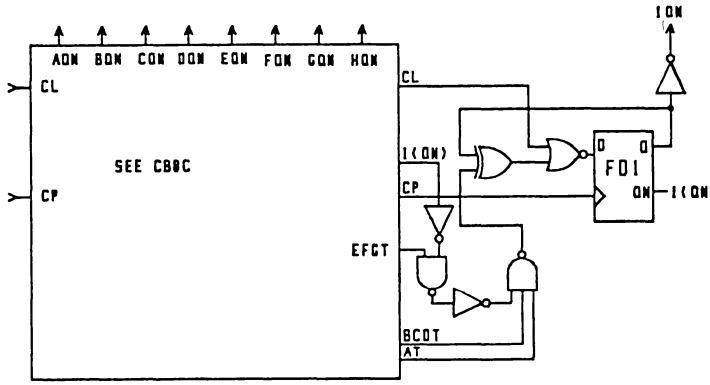

LOGIC DIAGRAM

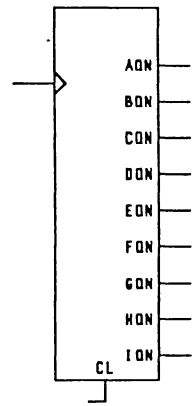

CB9F — 9 BIT BINARY UP COUNTER FAST, INDIVIDUAL CD SD — CB9F

NETWORK SCHEMATIC

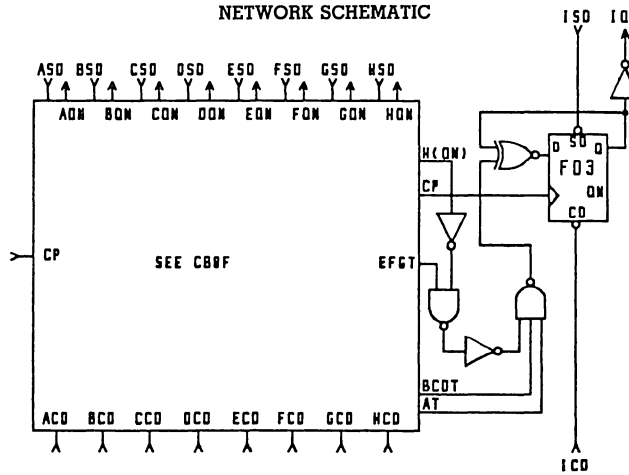

LOGIC DIAGRAM

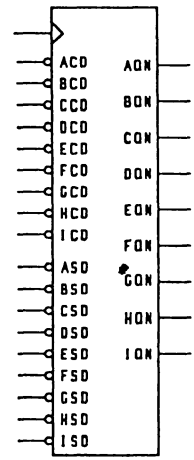

CB10C — 10 BIT BINARY UP COUNTER FAST, SYNC CLEAR — CB10C

NETWORK SCHEMATIC

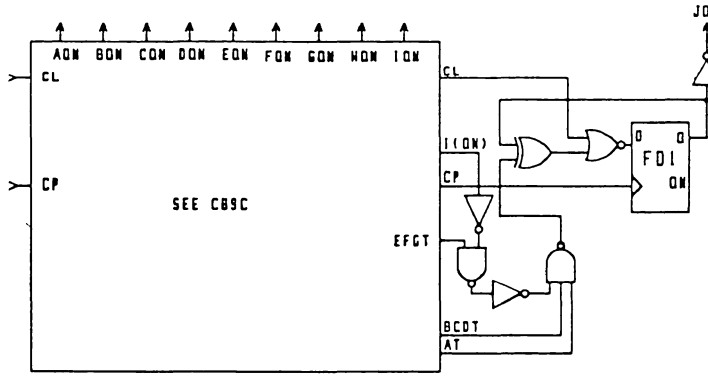

LOGIC DIAGRAM

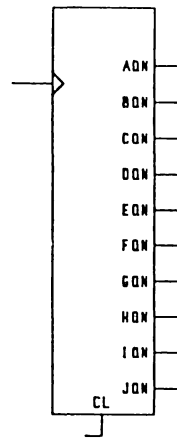

CB10F — 10 BIT BINARY UP COUNTER FAST, INDIVIDUAL CD SD — CB10F

NETWORK SCHEMATIC

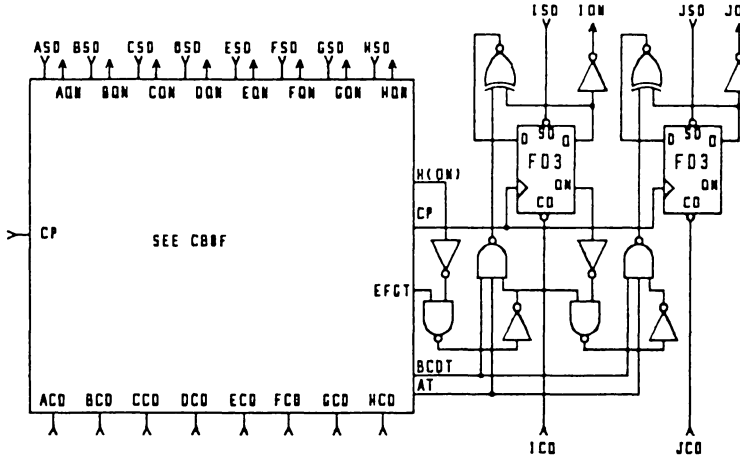

LOGIC DIAGRAM

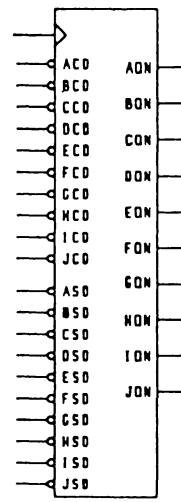

CB41 — 4 BIT BINARY UP COUNTER, EXPANDABLE ENABLE CLEAR DIRECT — CB41

NETWORK SCHEMATIC

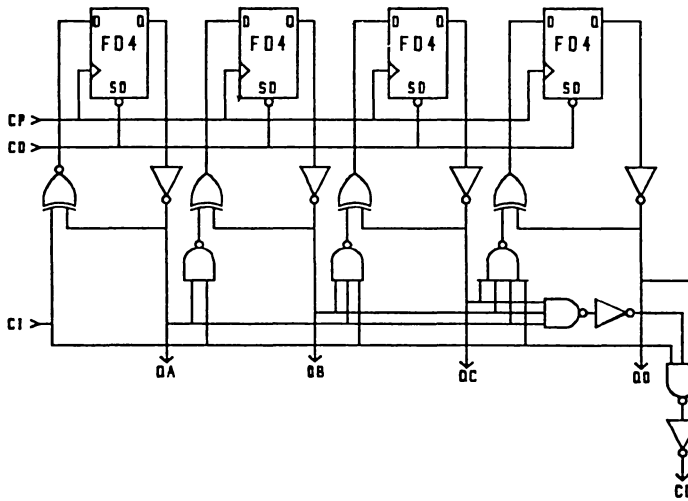

LOGIC DIAGRAM

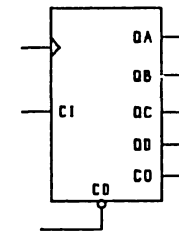

	OUTPUT			
	QA	QB	QC	QD
0	0	0	0	0
1	1	0	0	0
2	0	1	0	0
3	1	1	0	0
4	0	0	1	0
5	1	0	1	0
6	0	1	1	0
7	1	1	1	0
8	0	0	0	1
9	1	0	0	1
10	0	1	0	1
11	1	1	0	1
12	0	0	1	1
13	1	0	1	1
14	0	1	1	1
15	1	1	1	1

CB42 — 4 BIT BINARY UP COUNTER, EXPANDABLE ENABLE SYNC CLEAR, CD — CB42

NETWORK SCHEMATIC

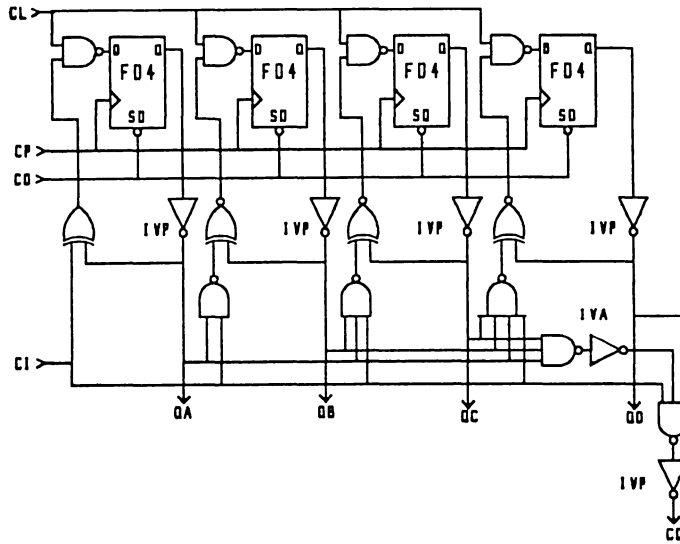

LOGIC DIAGRAM

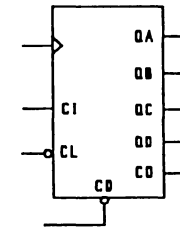

CLA1 — CARRY LOOK AHEAD FOR 4 BIT ADDER (LEAST SIGNIFICANT NIBBLE) — CLA1

NETWORK SCHEMATIC

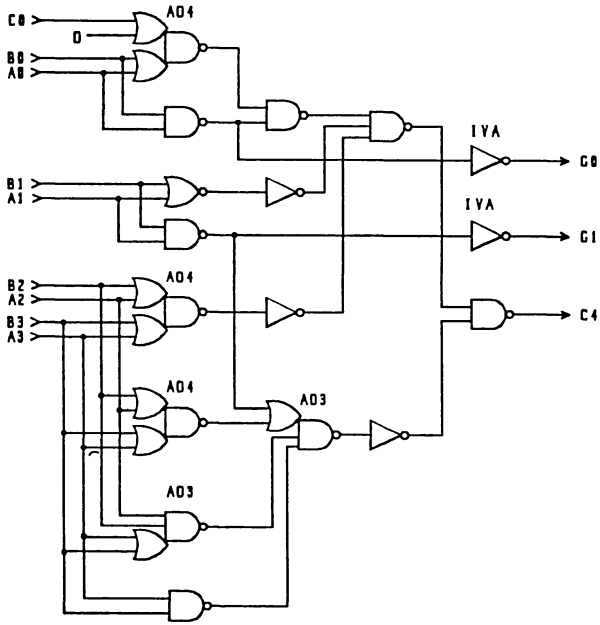

LOGIC DIAGRAM

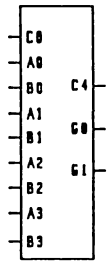

CLA2 CARRY LOOK AHEAD FOR 4 BIT ADDER CLA2

NETWORK SCHEMATIC

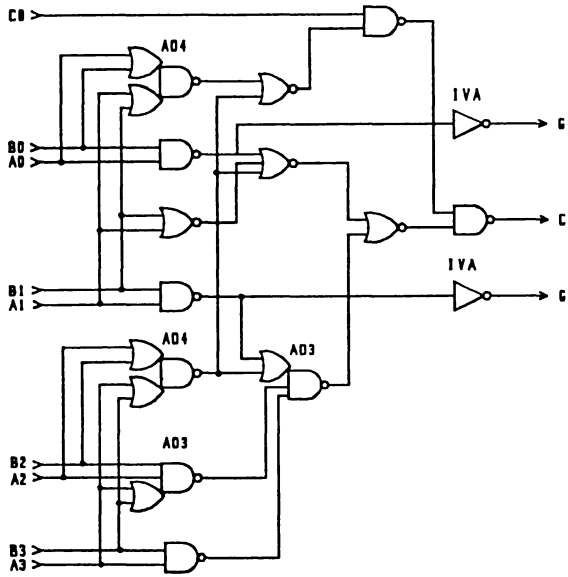

LOGIC DIAGRAM

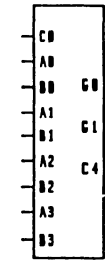

CMP4 — 4 BIT EQUALITY COMPARATOR — CMP4

NETWORK SCHEMATIC

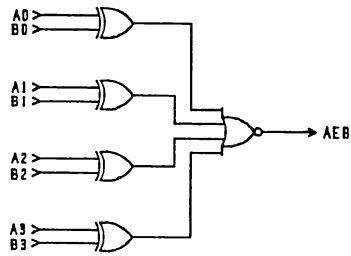

LOGIC DIAGRAM

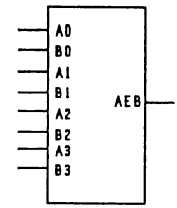

TRUTH TABLE

0-0	1-1	2-2	3-3	AEB
1	1	1	1	1
(ANY 0)				0

CMP8 — 8 BIT EQUALITY COMPARATOR — CMP8

NETWORK SCHEMATIC

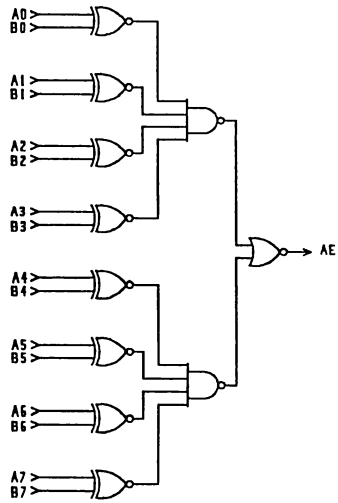

LOGIC DIAGRAM

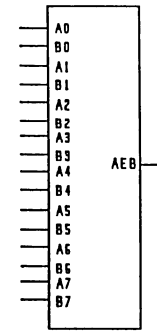

TRUTH TABLE

0-0	1-1	2-2	3-3	4-4	5-5	6-6	7-7	AEB
1	1	1	1	1	1	1	1	1
(ANY 0)								0

CM3B — MODULO 3 BINARY COUNTER CLEAR DIRECT — CM3B

NETWORK SCHEMATIC

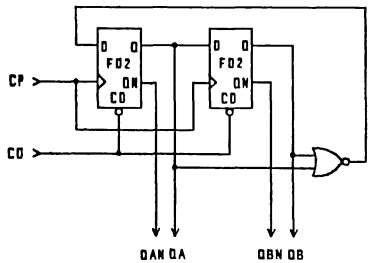

LOGIC DIAGRAM

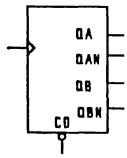

OUTPUT	
QA	QB
0	0
1	0
0	1

CM4B — MODULO 4 BINARY COUNTER CLEAR DIRECT — CM4B

NETWORK SCHEMATIC

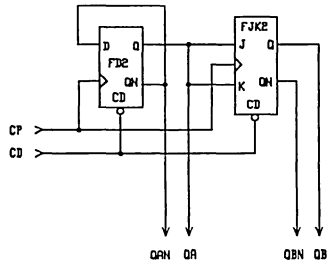

LOGIC DIAGRAM

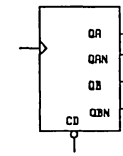

OUTPUT	
QA	**QB**
0	0
1	0
0	1
1	1

CM4J — MODULO 4 JOHNSON COUNTER CLEAR DIRECT — CM4J

NETWORK SCHEMATIC

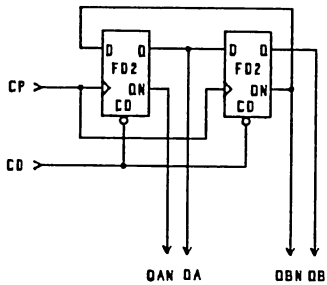

LOGIC DIAGRAM

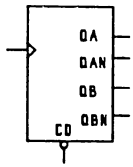

OUTPUT	
QA	QB
0	0
1	0
1	1
0	1

CM5B — MODULO 5 BINARY COUNTER CLEAR DIRECT — CM5B

NETWORK SCHEMATIC

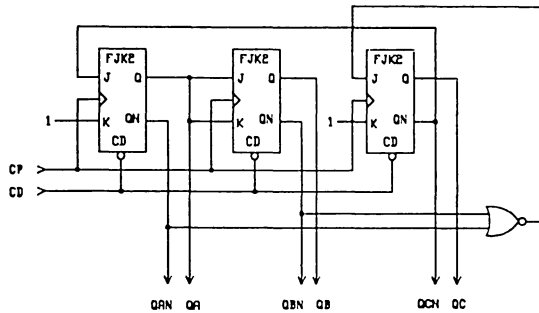

LOGIC DIAGRAM

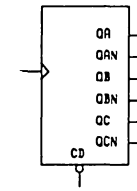

OUTPUT		
QA	QB	QC
0	0	0
1	0	0
0	1	0
1	1	0
0	0	1

CM5SR — MODULO 5 SHIFT COUNTER, CLEAR DIRECT — CM5SR

NETWORK SCHEMATIC

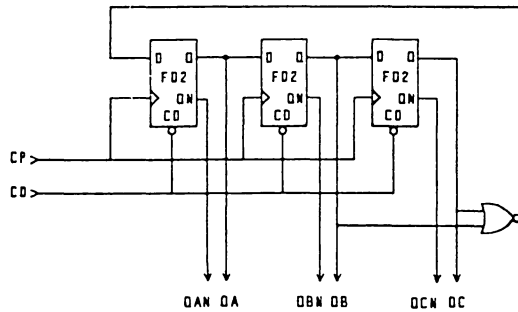

LOGIC DIAGRAM

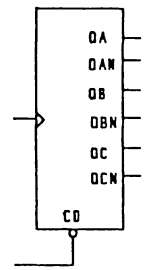

OUTPUT		
QA	QB	QC
0	0	0
1	0	0
1	1	0
0	1	1
0	0	1

CM6B — MODULO 6 BINARY COUNTER, CLEAR DIRECT — CM6B

NETWORK SCHEMATIC

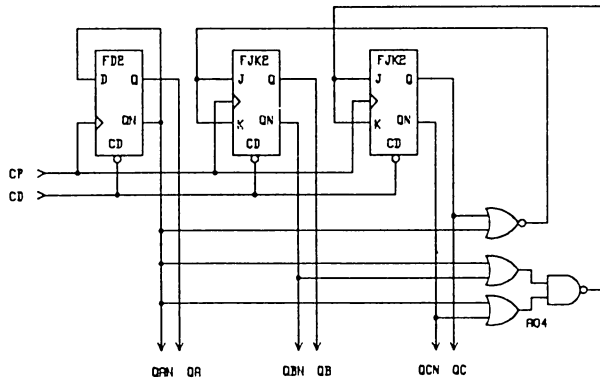

LOGIC DIAGRAM

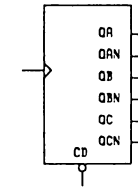

OUTPUT		
QA	**QB**	**QC**
0	0	0
1	0	0
0	1	0
1	1	0
0	0	1
1	0	1

CM6J — MODULO 6 JOHNSON COUNTER, CLEAR DIRECT — CM6J

NETWORK SCHEMATIC

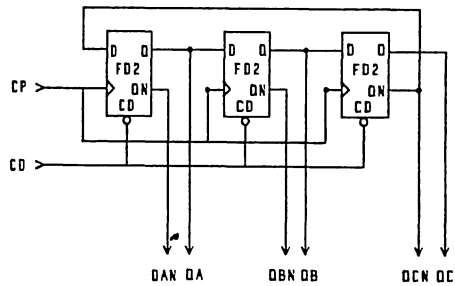

LOGIC DIAGRAM

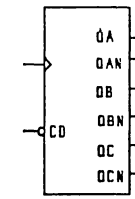

OUTPUT		
QA	QB	QC
0	0	0
1	0	0
1	1	0
1	1	1
0	1	1
0	0	1

CM7B — MODULO 7 BINARY COUNTER, CLEAR DIRECT — CM7B

NETWORK SCHEMATIC

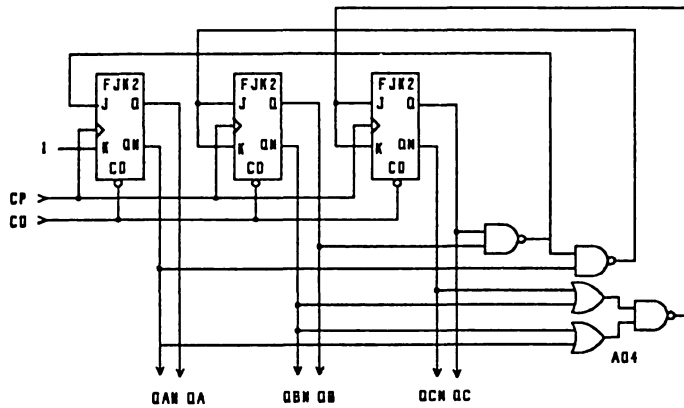

LOGIC DIAGRAM

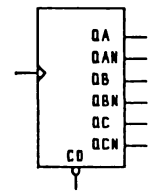

CM8B — MODULO 8 BINARY COUNTER CLEAR DIRECT — CM8B

NETWORK SCHEMATIC

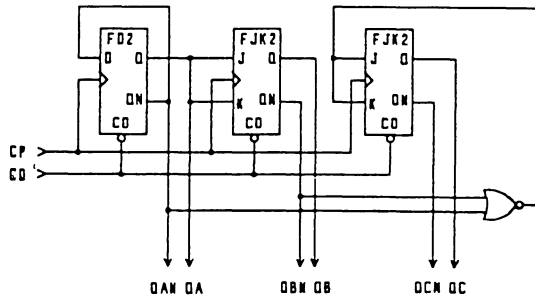

LOGIC DIAGRAM

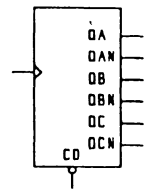

CM8J — MODULO 8 JOHNSON COUNTER CLEAR DIRECT — CM8J

NETWORK SCHEMATIC

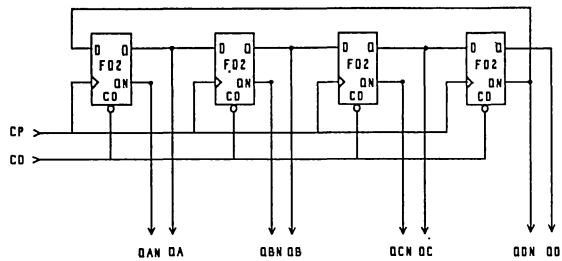

LOGIC DIAGRAM

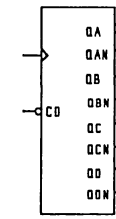

OUTPUT			
QA	QB	QC	QD
0	0	0	0
1	0	0	0
1	1	0	0
1	1	1	0
1	1	1	1
0	1	1	1
0	0	1	1
0	0	0	1

CM8SR — MODULO 8 SHIFT COUNTER, CLEAR DIRECT — CM8SR

NETWORK SCHEMATIC

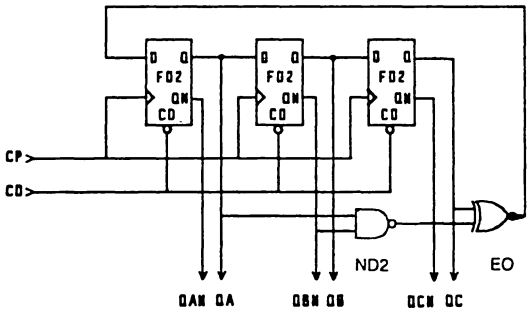

LOGIC DIAGRAM

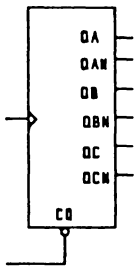

OUTPUT		
QA	QB	QC
0	0	0
1	0	0
0	1	0
1	0	1
1	1	0
1	1	1
0	1	1
0	0	1

CM9B — MODULO 9 BINARY COUNTER CLEAR DIRECT — CM9B

NETWORK SCHEMATIC

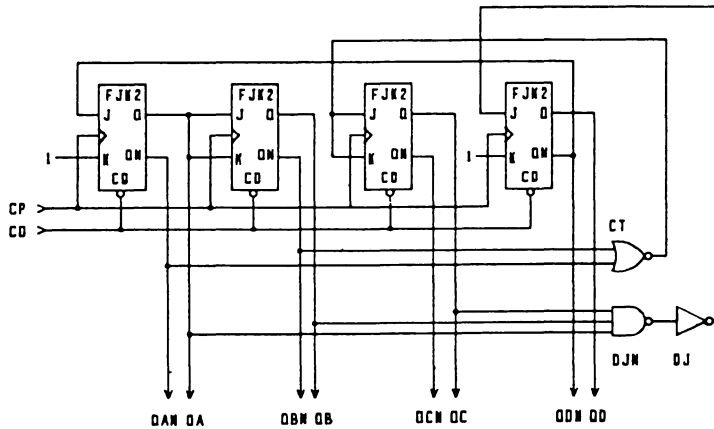

LOGIC DIAGRAM

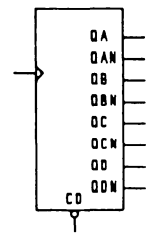

CM9SR — MODULO 9 SHIFT COUNTER, CLEAR DIRECT — CM9SR

NETWORK SCHEMATIC

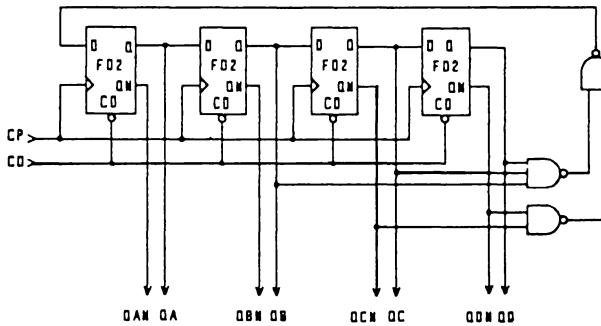

LOGIC DIAGRAM

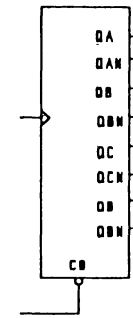

OUTPUT			
QA	QB	QC	QD
0	0	0	0
1	0	0	0
1	1	0	0
1	1	1	0
0	1	1	1
1	0	1	1
0	1	0	1
0	0	1	0
0	0	0	1

CM10B — MODULO 10 BINARY COUNTER CLEAR DIRECT — CM10B

NETWORK SCHEMATIC

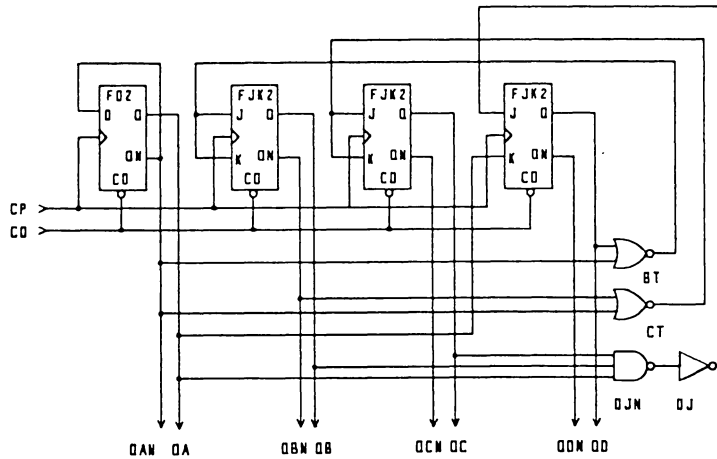

LOGIC DIAGRAM

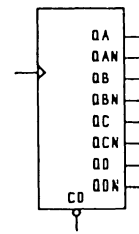

CM10J — MODULO 10 JOHNSON COUNTER CLEAR DIRECT — CM10J

NETWORK SCHEMATIC

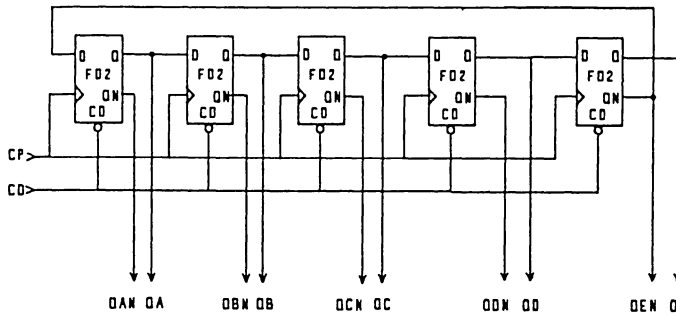

LOGIC DIAGRAM

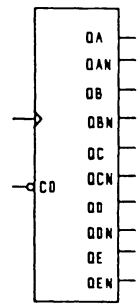

OUTPUT				
QA	QB	QC	QD	QE
0	0	0	0	0
1	0	0	0	0
1	1	0	0	0
1	1	1	0	0
1	1	1	1	0
1	1	1	1	1
0	1	1	1	1
0	0	1	1	1
0	0	0	1	1
0	0	0	0	1

CM10SR — MODULO 10 SHIFT COUNTER, CLEAR DIRECT — CM10SR

NETWORK SCHEMATIC

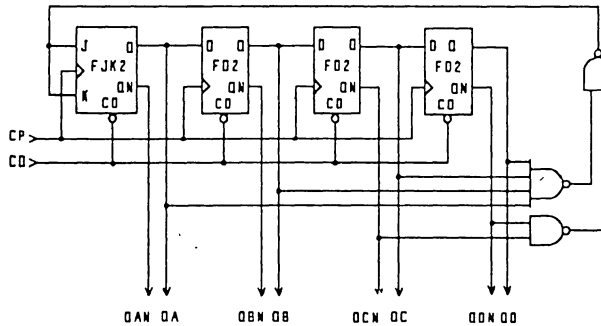

LOGIC DIAGRAM

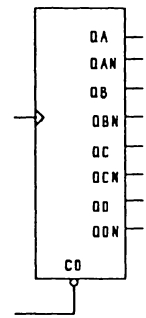

OUTPUT			
QA	QB	QC	QD
0	0	0	0
1	0	0	0
0	1	0	0
1	0	1	0
1	1	0	1
1	1	1	0
1	1	1	1
0	1	1	1
0	0	1	1
0	0	0	1

CM11B — MODULO 11 BINARY COUNTER CLEAR DIRECT — CM11B

NETWORK SCHEMATIC

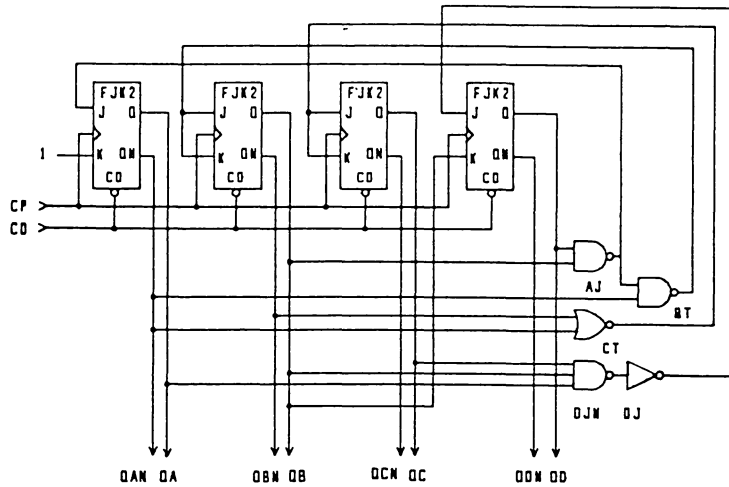

LOGIC DIAGRAM

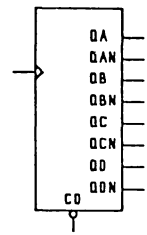

CM12B — MODULO 12 BINARY COUNTER CLEAR DIRECT — CM12B

NETWORK SCHEMATIC

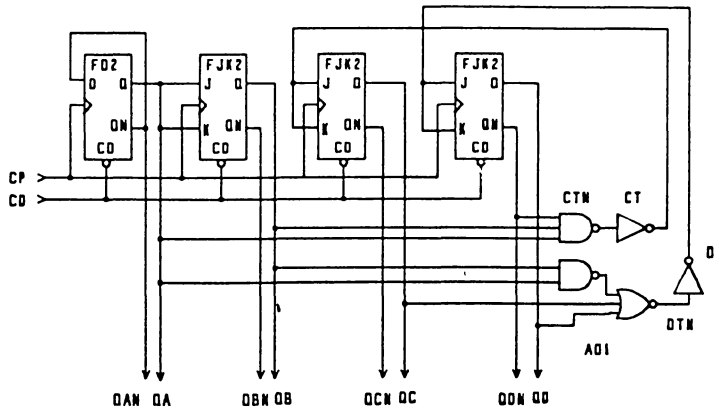

LOGIC DIAGRAM

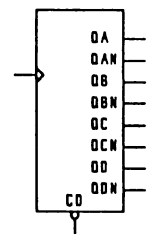

CM12J — MODULO 12 JOHNSON COUNTER CLEAR DIRECT — CM12J

NETWORK SCHEMATIC

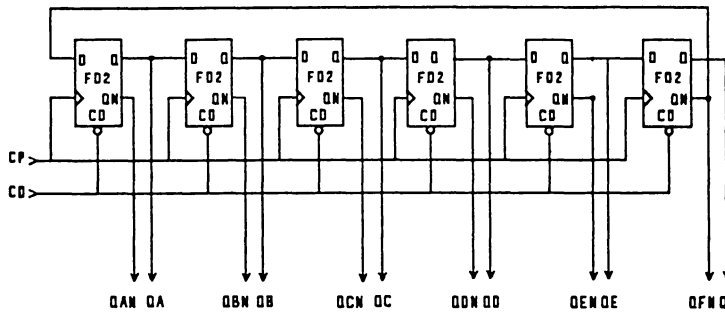

LOGIC DIAGRAM

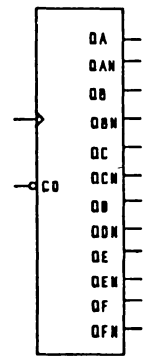

CM12SR — MODULO 12 SHIFT COUNTER, CLEAR DIRECT — CM12SR

NETWORK SCHEMATIC

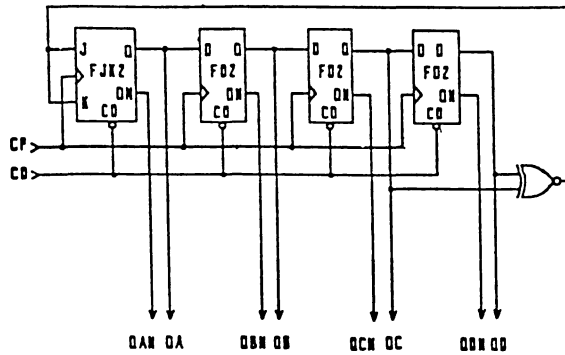

LOGIC DIAGRAM

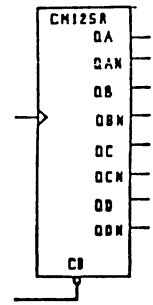

OUTPUT			
QA	QB	QC	QD
0	0	0	0
1	0	0	0
0	1	0	0
1	0	1	0
1	1	0	1
1	1	1	0
1	1	1	1
0	1	1	1
1	0	1	1
0	1	0	1
0	0	1	0
0	0	0	1

CM13B — MODULO 13 BINARY COUNTER CLEAR DIRECT — CM13B

NETWORK SCHEMATIC

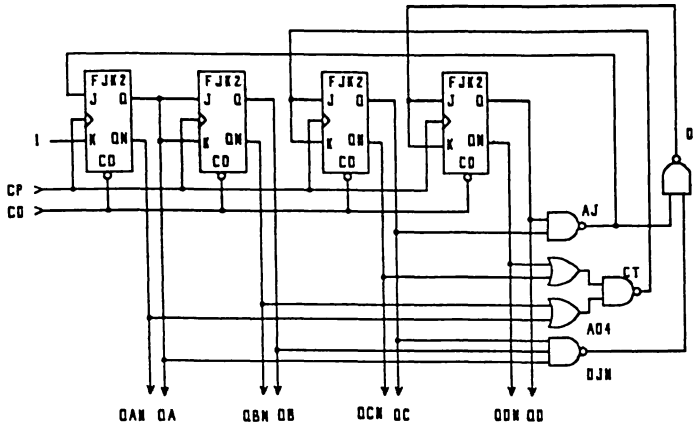

LOGIC DIAGRAM

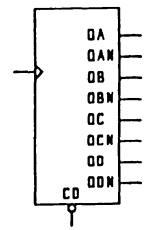

CM14B — MODULO 14 BINARY COUNTER CLEAR DIRECT — CM14B

NETWORK SCHEMATIC

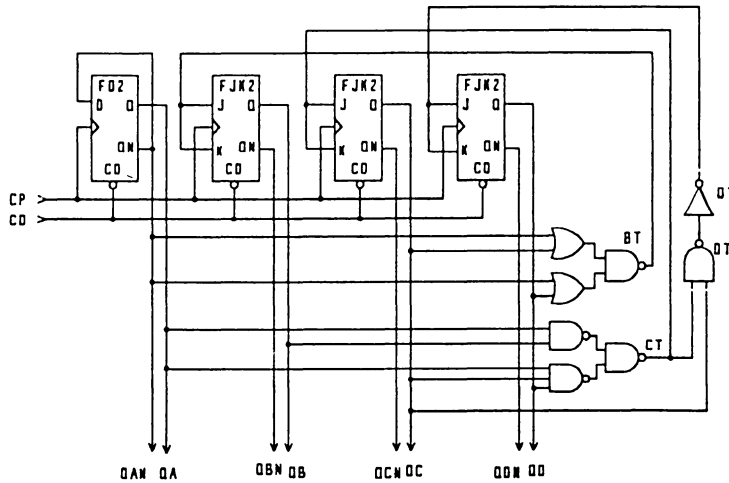

LOGIC DIAGRAM

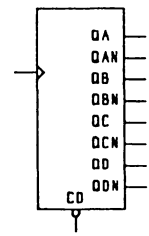

CM14J — MODULO 14 JOHNSON COUNTER, CLEAR DIRECT — CM14J

NETWORK SCHEMATIC

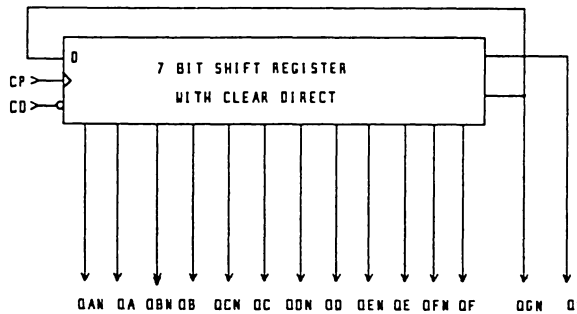

LOGIC DIAGRAM

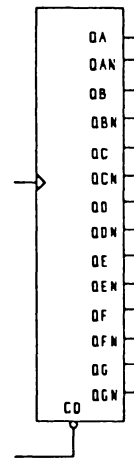

CM15B — MODULO 15 BINARY COUNTER CLEAR DIRECT — CM15B

NETWORK SCHEMATIC

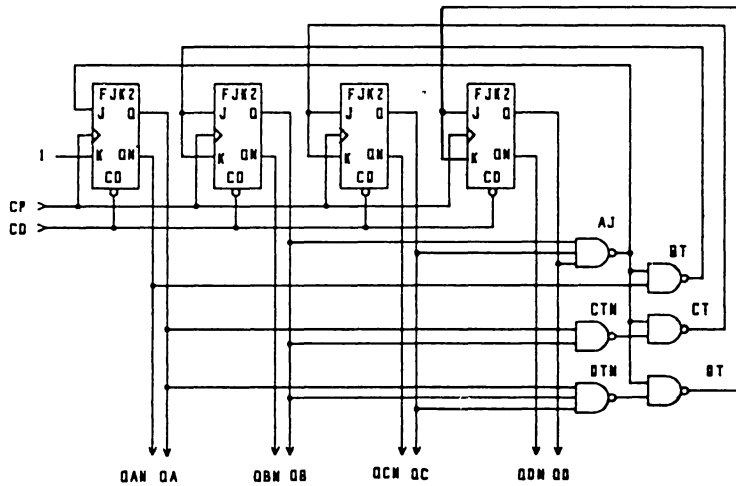

LOGIC DIAGRAM

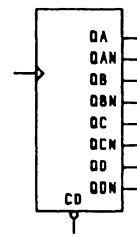

CM16B — MODULO 16 BINARY COUNTER CLEAR DIRECT — CM16B

NETWORK SCHEMATIC

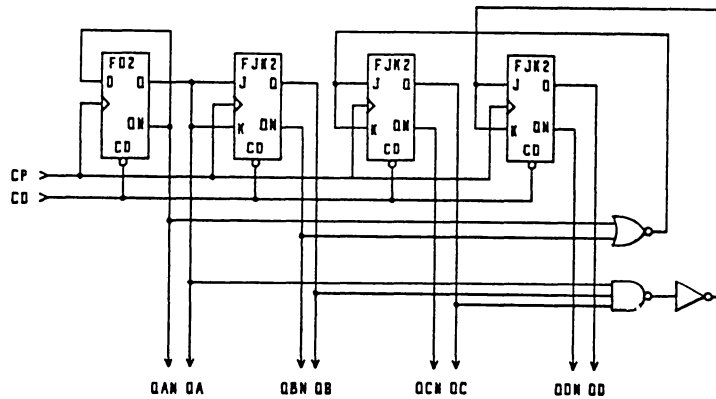

LOGIC DIAGRAM

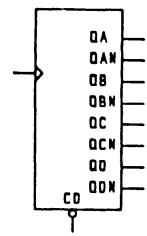

CM16J — MODULO 16 JOHNSON COUNTER, CLEAR DIRECT — CM16J

NETWORK SCHEMATIC

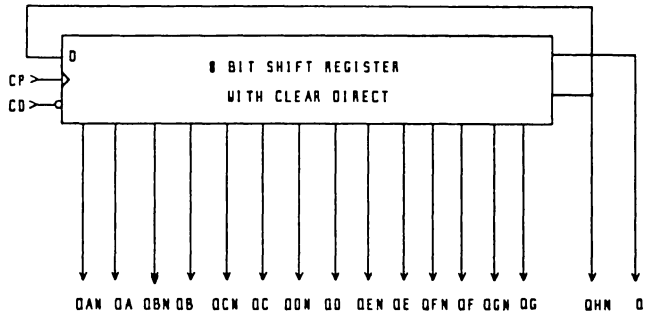

LOGIC DIAGRAM

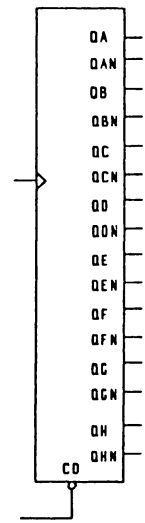

CM17B — MODULO 17 BINARY COUNTER CLEAR DIRECT — CM17B

NETWORK SCHEMATIC

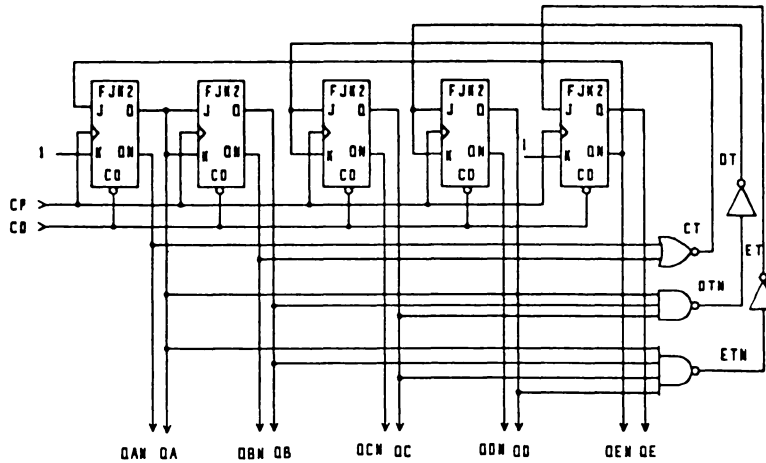

LOGIC DIAGRAM

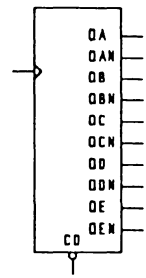

CUD41 — 4 BIT UP/DOWN COUNTER, EXPANDABLE WITH ASYNCHRONOUS CLEAR — CUD41

NETWORK SCHEMATIC

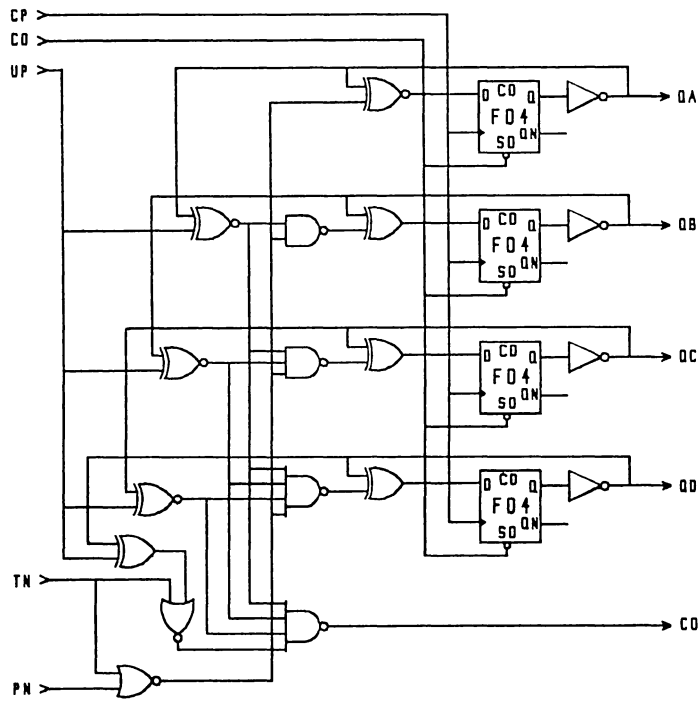

LOGIC DIAGRAM

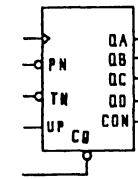

CUD42 — 4 BIT UP/DOWN COUNTER, EXPANDABLE WITH ASYNCHRONOUS LOAD AND CLEAR — CUD42

NETWORK SCHEMATIC

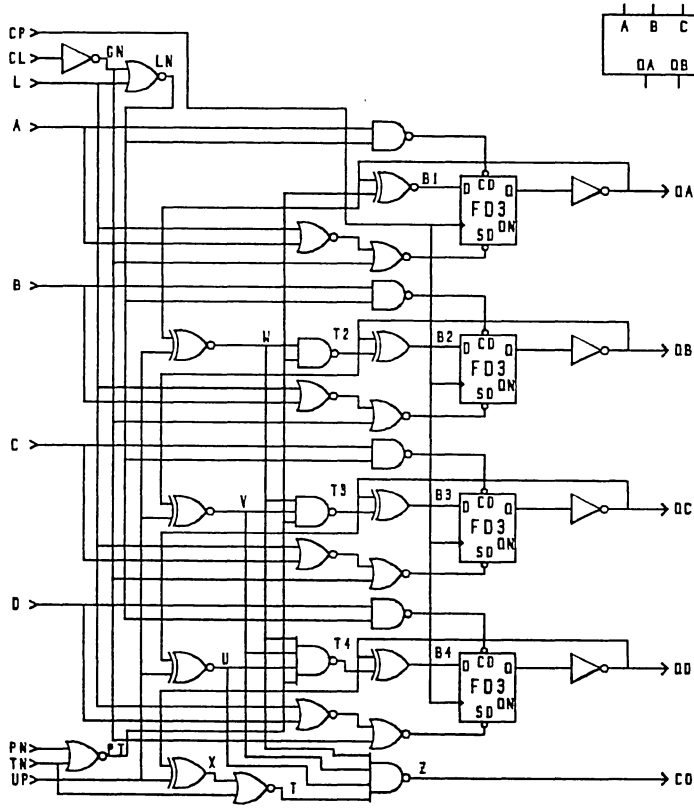

LOGIC DIAGRAM

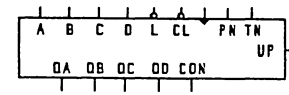

C2G — MODULO 4 GRAY COUNTER CLEAR DIRECT (SAME AS CM4J) — C2G

NETWORK SCHEMATIC

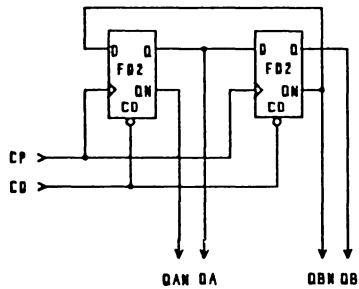

LOGIC DIAGRAM

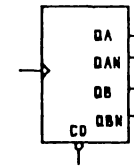

OUTPUT	
QA	QB
0	0
1	0
1	1
0	1

C3G MODULO 8 GRAY COUNTER CLEAR DIRECT C3G

NETWORK SCHEMATIC

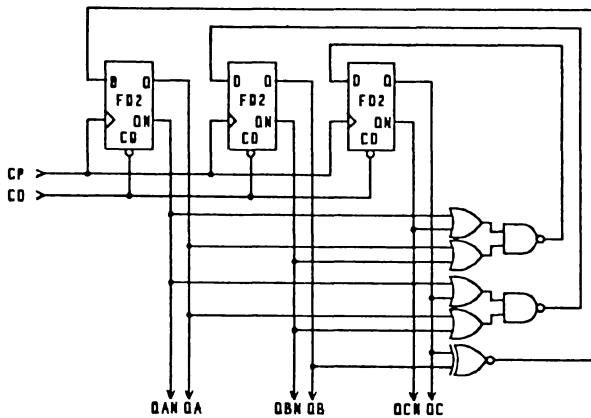

LOGIC DIAGRAM

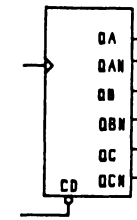

OUTPUT		
QA	QB	QC
0	0	0
1	0	0
1	1	0
0	1	0
0	1	1
1	1	1
1	0	1
0	0	1

C4G — MODULO 16 GRAY COUNTER CLEAR DIRECT, PRESCALED — C4G

NETWORK SCHEMATIC

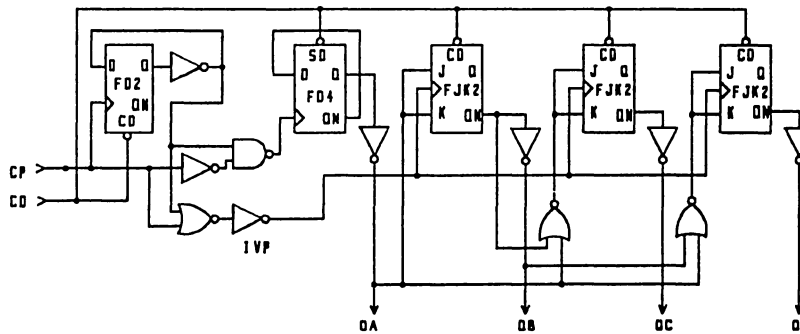

LOGIC DIAGRAM

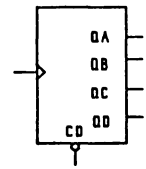

C5G — MODULO 32 GRAY COUNTER CLEAR DIRECT, PRESCALED — C5G

NETWORK SCHEMATIC (PART I)

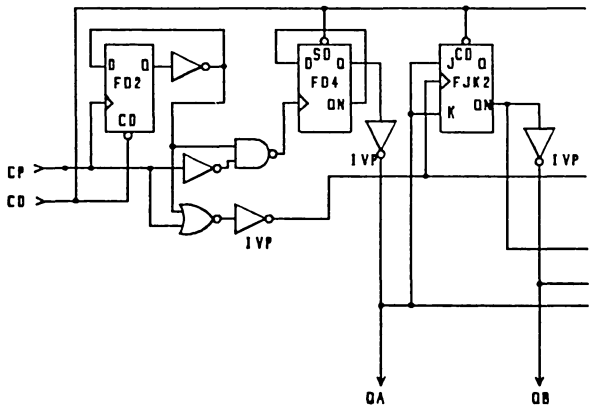

LOGIC DIAGRAM

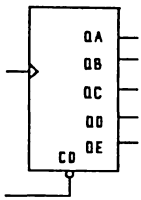

(PART II)

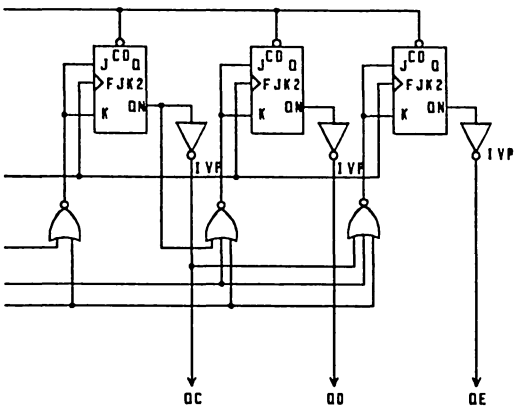

C6G	MODULO 64 GRAY COUNTER CLEAR DIRECT, PRESCALED	C6G

NETWORK SCHEMATIC (PART I)

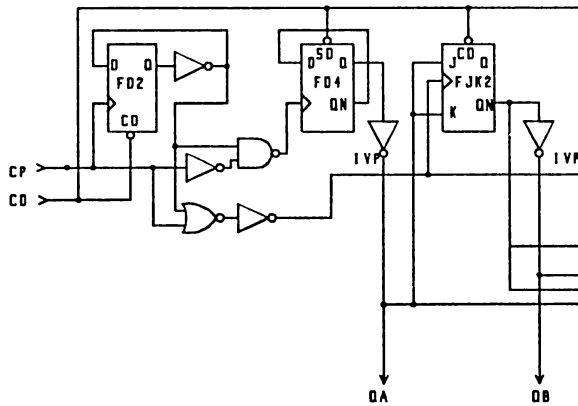

LOGIC DIAGRAM

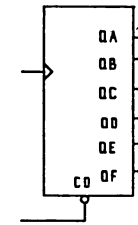

(PART II)

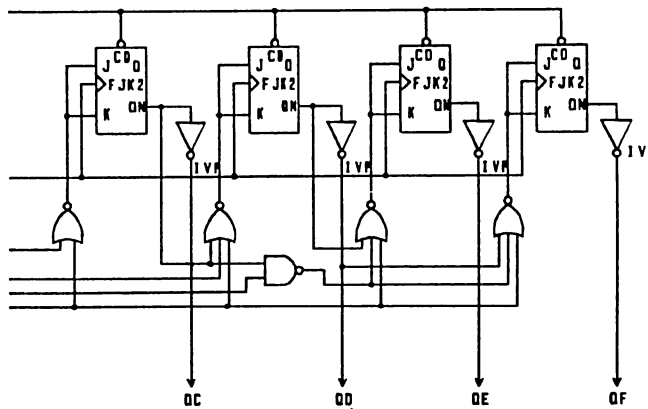

C7G — MODULO 128 GRAY COUNTER CLEAR DIRECT, PRESCALED — C7G

NETWORK SCHEMATIC (PART I)

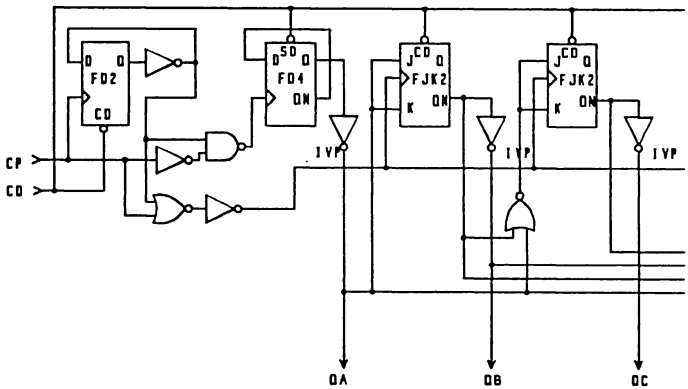

LOGIC DIAGRAM

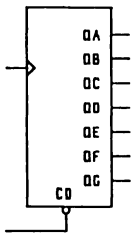

(PART II)

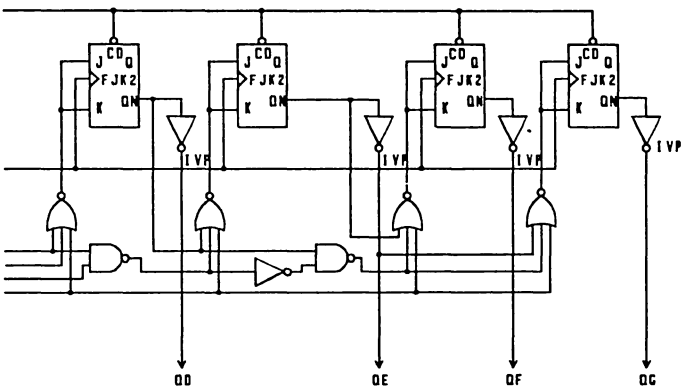

C8G — MODULO 256 GRAY COUNTER CLEAR DIRECT, PRESCALED — C8G

NETWORK SCHEMATIC (PART I)

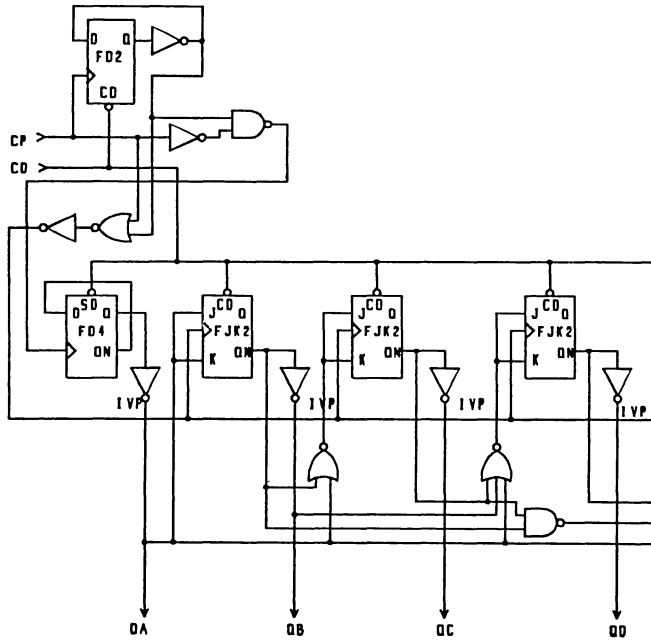

LOGIC DIAGRAM

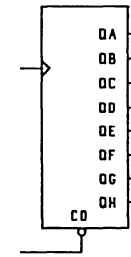

C8G	MODULO 256 GRAY COUNTER CLEAR DIRECT, PRESCALED	C8G

NETWORK SCHEMATIC (PART II)

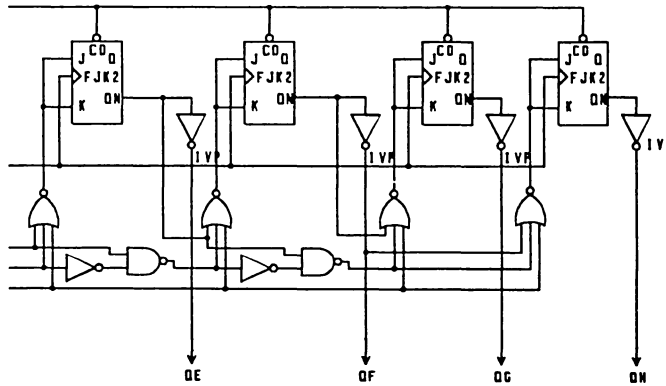

C3LSR — 3 BIT, MODULO 7, LINEAR FEEDBACK SHIFT REGISTER — C3LSR

NETWORK SCHEMATIC

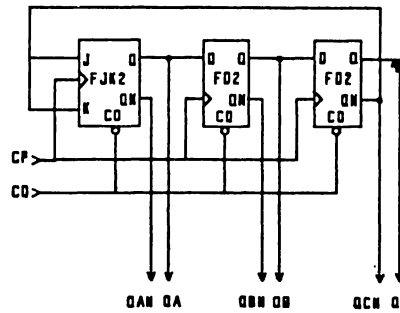

LOGIC DIAGRAM

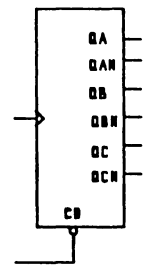

OUTPUT		
QA	QB	QC
0	0	0
1	0	0
0	1	0
1	0	1
1	1	0
0	1	1
0	0	1

C4LSR — 4 BIT, MODULO 15, LINEAR FEEDBACK SHIFT REGISTER — C4LSR

NETWORK SCHEMATIC

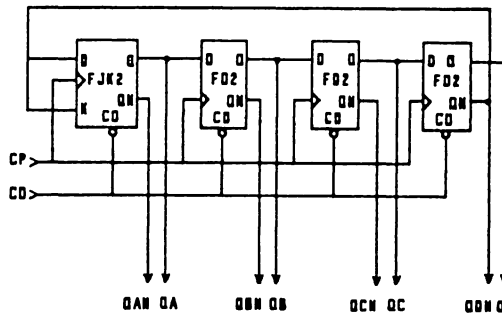

LOGIC DIAGRAM

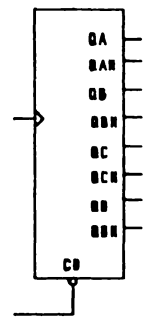

C5LSR — 5 BIT, MODULO 31, LINEAR FEEDBACK SHIFT REGISTER — C5LSR

NETWORK SCHEMATIC

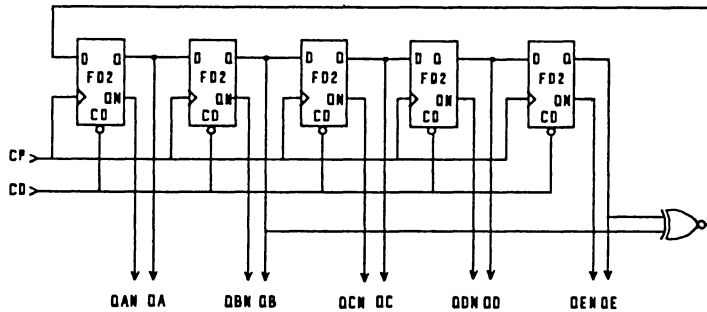

LOGIC DIAGRAM

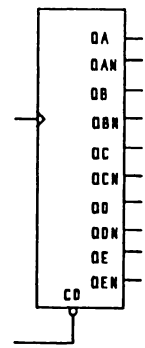

C6LSR — 6 BIT, MODULO 63, LINEAR FEEDBACK SHIFT REGISTER — C6LSR

NETWORK SCHEMATIC

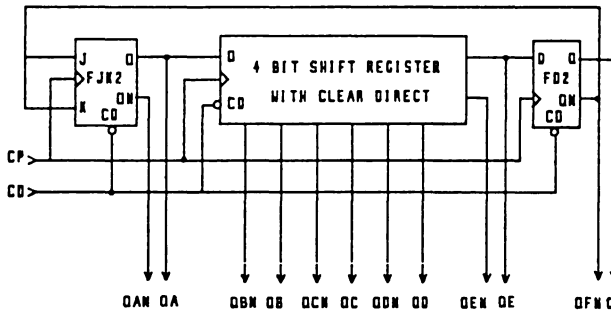

LOGIC DIAGRAM

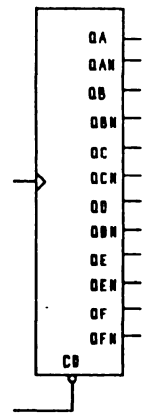

C7LSR — 7 BIT, MODULO 127, LINEAR FEEDBACK SHIFT REGISTER — C7LSR

NETWORK SCHEMATIC

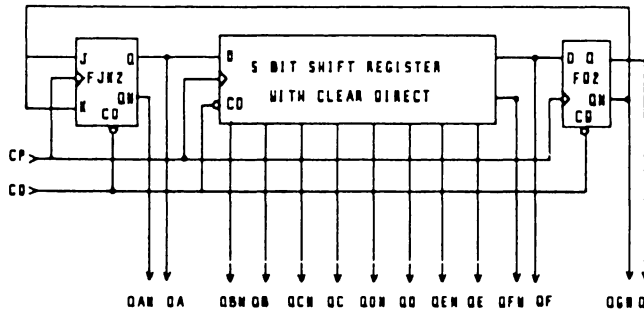

LOGIC DIAGRAM

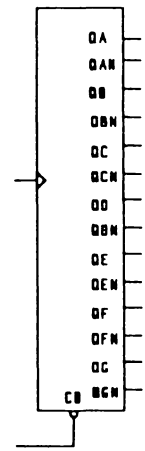

C8LSR — 8 BIT, MODULO 255, LINEAR FEEDBACK SHIFT REGISTER — C8LSR

NETWORK SCHEMATIC

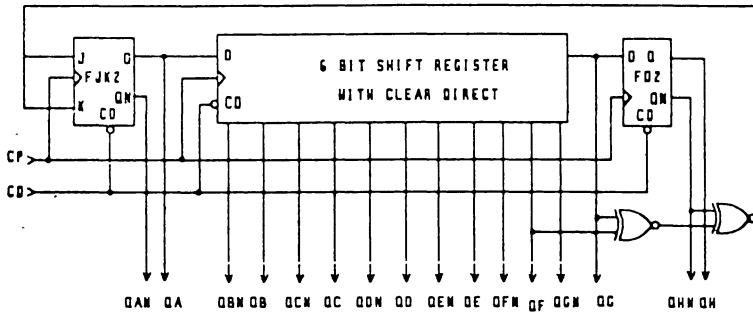

LOGIC DIAGRAM

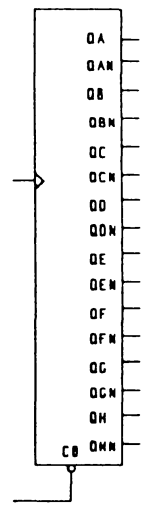

C9LSR — 9 BIT, MODULO 511, LINEAR FEEDBACK SHIFT REGISTER — C9LSR

NETWORK SCHEMATIC

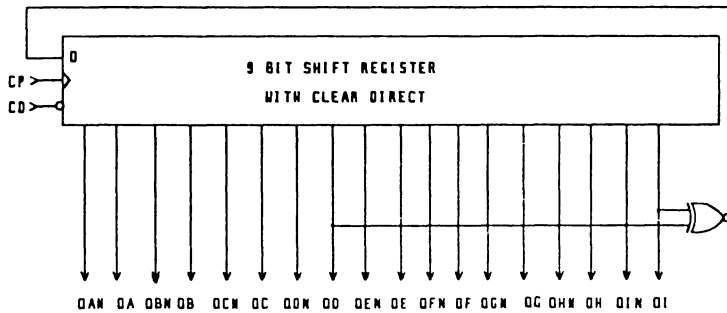

LOGIC DIAGRAM

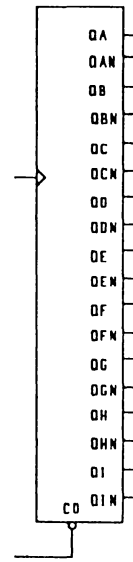

C10LSR — 10 BIT, MODULO 1023, LINEAR FEEDBACK SHIFT REGISTER — C10LSR

NETWORK SCHEMATIC

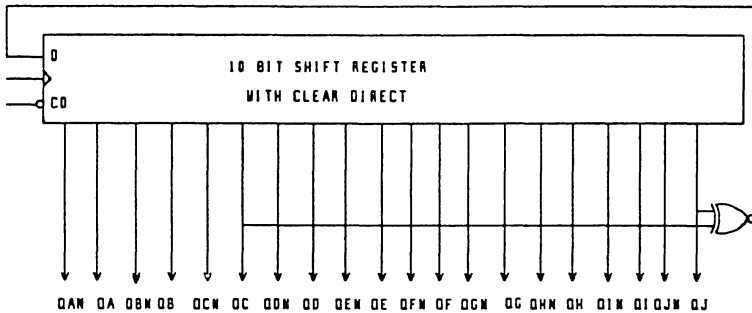

LOGIC DIAGRAM

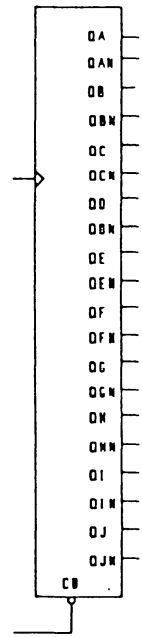

C11LSR — 11 BIT, MODULO 2047, LINEAR FEEDBACK SHIFT REGISTER — C11LSR

NETWORK SCHEMATIC

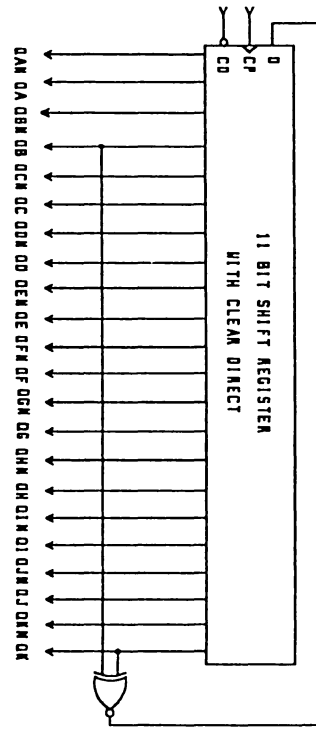

C12LSR — 12 BIT, MODULO 4095, LINEAR FEEDBACK SHIFT REGISTER — C12LSR

NETWORK SCHEMATIC

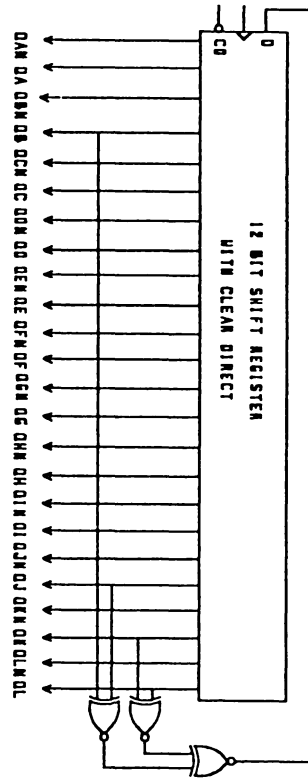

C13LSR — 13 BIT, MODULO 8191, LINEAR FEEDBACK SHIFT REGISTER — C13LSR

NETWORK SCHEMATIC

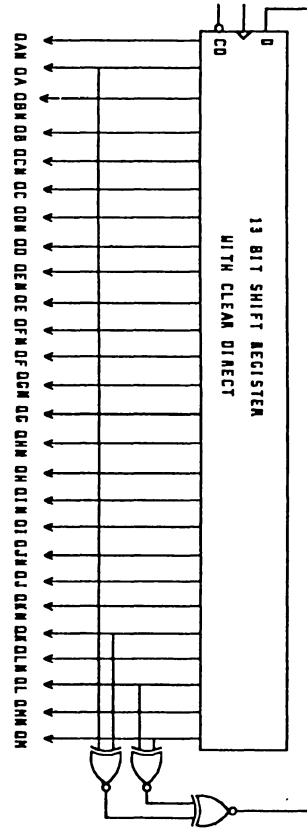

C14LSR — 14 BIT, MODULO 16383, LINEAR FEEDBACK SHIFT REGISTER — C14LSR

NETWORK SCHEMATIC

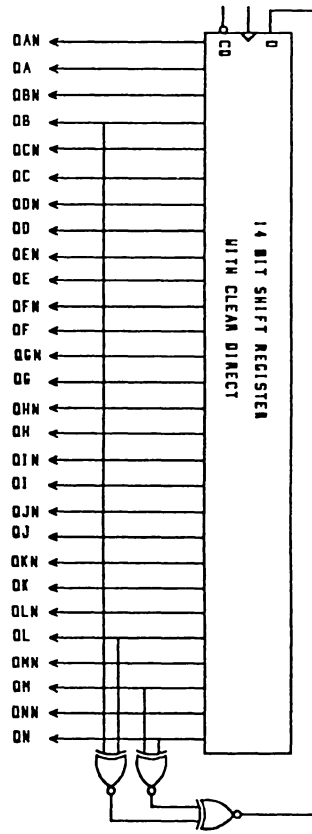

C15LSR — 15 BIT, MODULO 32767, LINEAR FEEDBACK SHIFT REGISTER — C15LSR

NETWORK SCHEMATIC

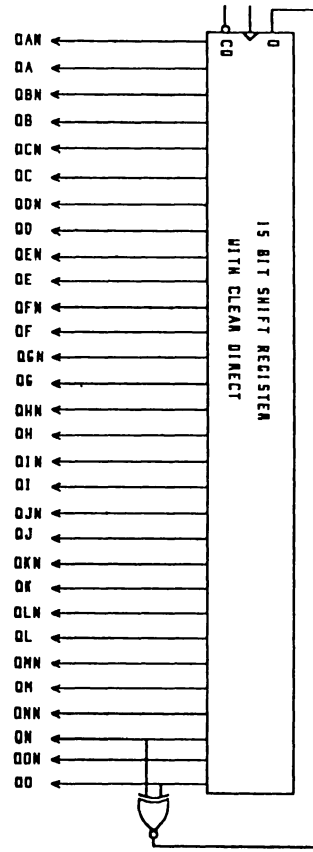

C16LSR — 16 BIT, MODULO 65535, LINEAR FEEDBACK SHIFT REGISTER — C16LSR

NETWORK SCHEMATIC

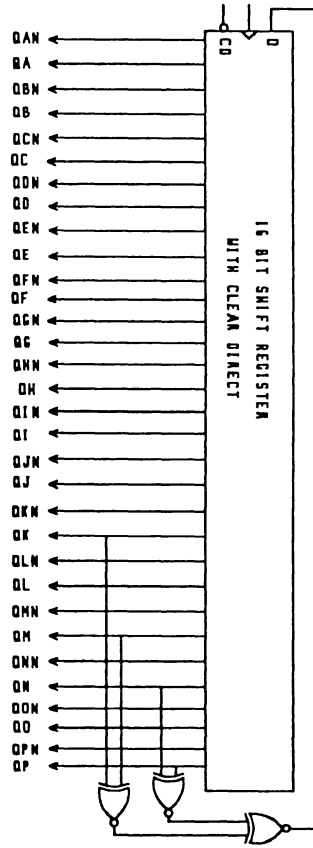

C17LSR — 17 BIT, MODULO 131071, LINEAR FEEDBACK SHIFT REGISTER — C17LSR

NETWORK SCHEMATIC

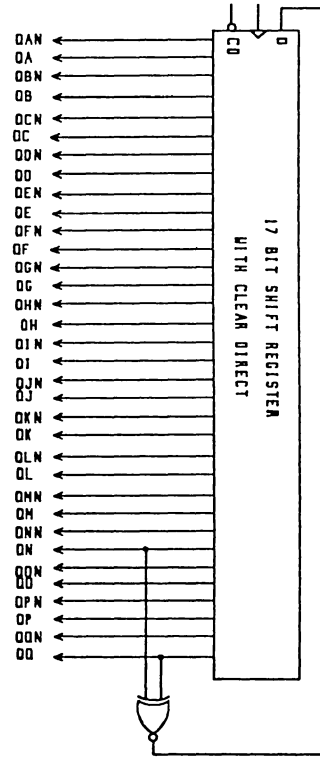

C18LSR — 18 BIT, MODULO 262143, LINEAR FEEDBACK SHIFT REGISTER — C18LSR

NETWORK SCHEMATIC

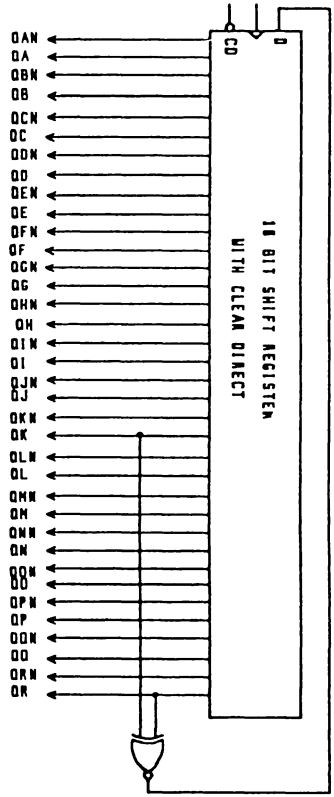

C19LSR — 19 BIT, MODULO 524287, LINEAR FEEDBACK SHIFT REGISTER — C19LSR

NETWORK SCHEMATIC

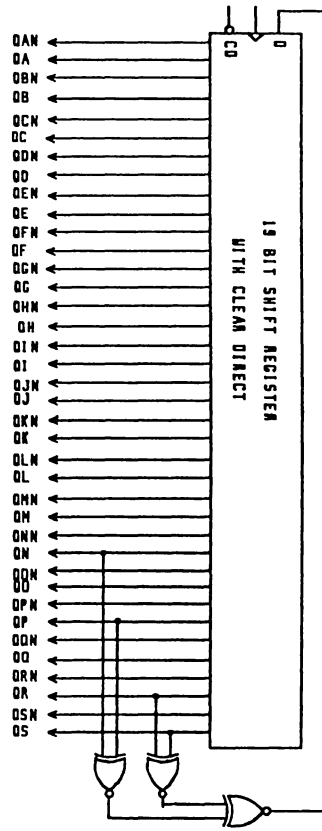

C20LSR — 20 BIT, MODULO 1048575, LINEAR FEEDBACK SHIFT REGISTER — C20LSR

NETWORK SCHEMATIC

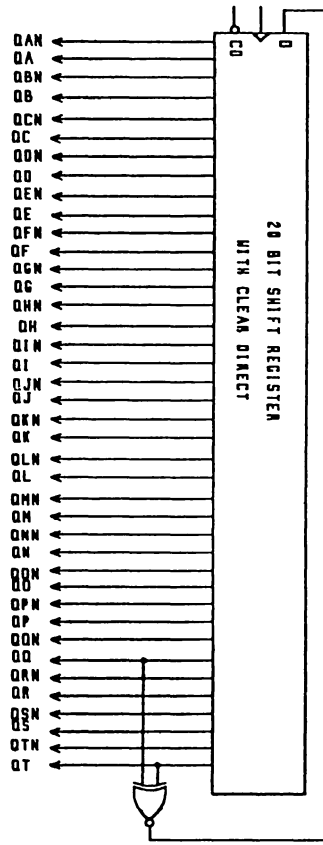

DM6JH — SPIKE FREE DECODER FOR MOD 6 JOHNSON COUNTER, ACTIVE HI, SEE CM6J — DM6JH

NETWORK SCHEMATIC

FROM THE Q AND QN OUTPUT
OF THE JOHNSON COUNTER

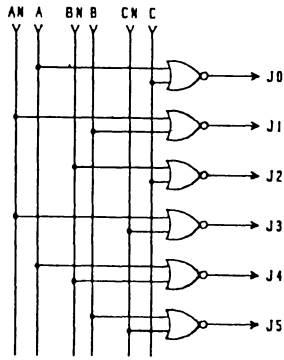

LOGIC DIAGRAM

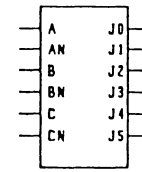

Q OUTPUT OF THE JOHNSON COUNTER			
QA	**QB**	**QC**	
0	0	0	J0
1	0	0	J1
1	1	0	J2
1	1	1	J3
0	1	1	J4
0	0	1	J5

DM6JL — SPIKE FREE DECODER FOR MOD 6 JOHNSON COUNTER, ACTIVE LO, SEE CM6J — DM6JL

NETWORK SCHEMATIC

FROM THE Q AND QN OUTPUT
OF THE JOHNSON COUNTER

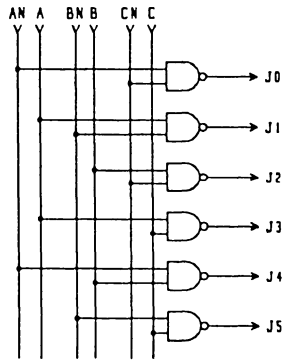

LOGIC DIAGRAM

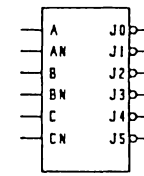

Q OUTPUT OF THE JOHNSON COUNTER			
QA	**QB**	**QC**	
0	0	0	J0
1	0	0	J1
1	1	0	J2
1	1	1	J3
0	1	1	J4
0	0	1	J5

DM8JH — SPIKE FREE DECODER FOR MOD 8 JOHNSON COUNTER, ACTIVE HI, SEE CM8J — DM8JH

NETWORK SCHEMATIC

FROM THE Q AND QN OUTPUT
OF THE JOHNSON COUNTER

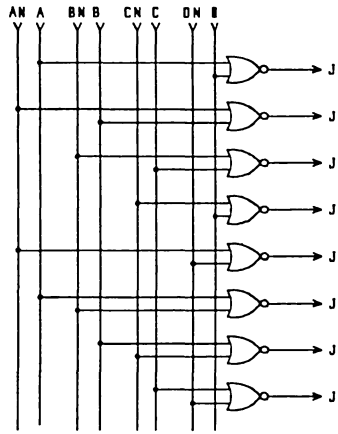

LOGIC DIAGRAM

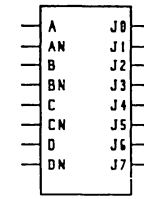

Q OUTPUT OF THE JOHNSON COUNTER				
QA	**QB**	**QC**	**QD**	
0	0	0	0	J0
1	0	0	0	J1
1	1	0	0	J2
1	1	1	0	J3
1	1	1	1	J4
0	1	1	1	J5
0	0	1	1	J6
0	0	0	1	J7

DM8JL — SPIKE FREE DECODER FOR MOD 8 JOHNSON COUNTER, ACTIVE LO, SEE CM8J — DM8JL

NETWORK SCHEMATIC

FROM THE Q AND QN OUTPUT
OF THE JOHNSON COUNTER

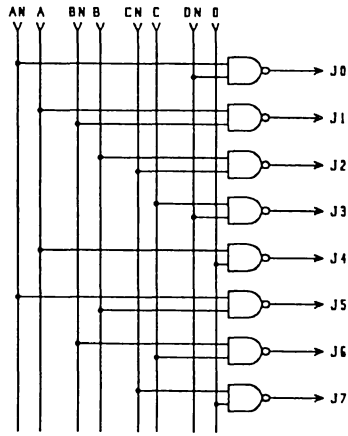

LOGIC DIAGRAM

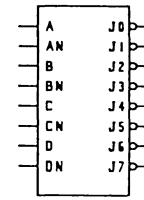

Q OUTPUT OF THE JOHNSON COUNTER				
QA	**QB**	**QC**	**QD**	
0	0	0	0	J0
1	0	0	0	J1
1	1	0	0	J2
1	1	1	0	J3
1	1	1	1	J4
0	1	1	1	J5
0	0	1	1	J6
0	0	0	1	J7

DM10JH — SPIKE FREE DECODER FOR MOD 10 JOHNSON COUNTER, ACTIVE HI, SEE CM10J — DM10JH

NETWORK SCHEMATIC

FROM THE Q AND QN OUTPUT
OF THE JOHNSON COUNTER

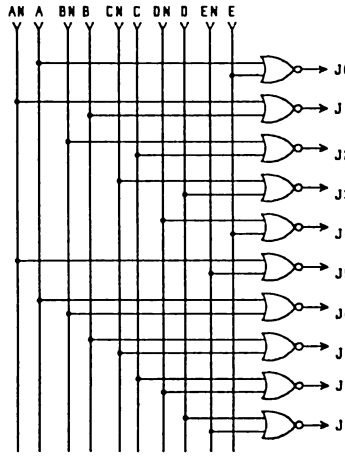

LOGIC DIAGRAM

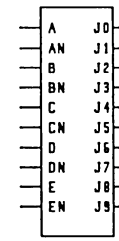

Q OUTPUT OF THE JOHNSON COUNTER					
QA	**QB**	**QC**	**QD**	**QE**	
0	0	0	0	0	J0
1	0	0	0	0	J1
1	1	0	0	0	J2
1	1	1	0	0	J3
1	1	1	1	0	J4
1	1	1	1	1	J5
0	1	1	1	1	J6
0	0	1	1	1	J7
0	0	0	1	1	J8
0	0	0	0	1	J9

DM10JL — SPIKE FREE DECODER FOR MOD 10 JHONSON COUNTER, ACTIVE LO, SEE CM10J — DM10JL

NETWORK SCHEMATIC

FROM THE Q AND QN OUTPUT
OF THE JOHNSON COUNTER

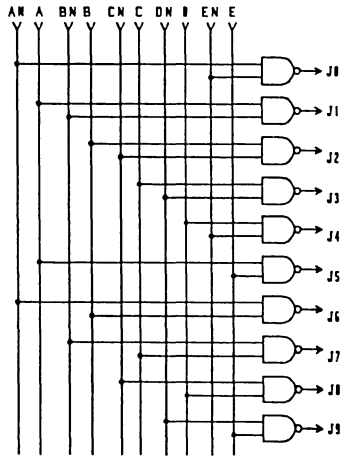

LOGIC DIAGRAM

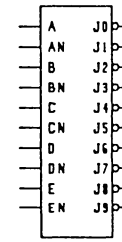

Q OUTPUT OF THE JOHNSON COUNTER					
QA	QB	QC	QD	QE	
0	0	0	0	0	J0
1	0	0	0	0	J1
1	1	0	0	0	J2
1	1	1	0	0	J3
1	1	1	1	0	J4
1	1	1	1	1	J5
0	1	1	1	1	J6
0	0	1	1	1	J7
0	0	0	1	1	J8
0	0	0	0	1	J9

DM12JH — SPIKE FREE DECODER FOR MOD 12 JOHNSON COUNTER, ACTIVE HI, SEE CM12J — DM12JH

NETWORK SCHEMATIC

FROM THE Q AND QN OUTPUT
OF THE JOHNSON COUNTER

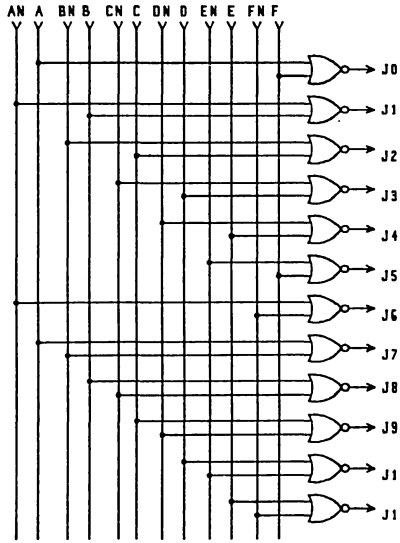

LOGIC DIAGRAM

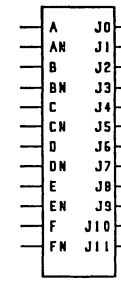

Q OUTPUT OF THE JOHNSON COUNTER						
QA	QB	QC	QD	QE	QF	
0	0	0	0	0	0	J0
1	0	0	0	0	0	J1
1	1	0	0	0	0	J2
1	1	1	0	0	0	J3
1	1	1	1	0	0	J4
1	1	1	1	1	0	J5
1	1	1	1	1	1	J6
0	1	1	1	1	1	J7
0	0	1	1	1	1	J8
0	0	0	1	1	1	J9
0	0	0	0	1	1	J10
0	0	0	0	0	1	J11

DM12JL — SPIKE FREE DECODER FOR MOD 12 JOHNSON COUNTER, ACTIVE LO, SEE CM12J — DM12JL

NETWORK SCHEMATIC

FROM THE Q AND QN OUTPUT
OF THE JOHNSON COUNTER

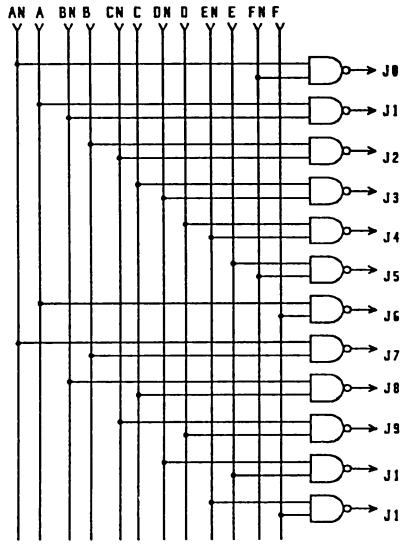

LOGIC DIAGRAM

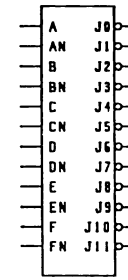

Q OUTPUT OF THE JOHNSON COUNTER						
QA	QB	QC	QD	QE	QF	
0	0	0	0	0	0	J0
1	0	0	0	0	0	J1
1	1	0	0	0	0	J2
1	1	1	0	0	0	J3
1	1	1	1	0	0	J4
1	1	1	1	1	0	J5
1	1	1	1	1	1	J6
0	1	1	1	1	1	J7
0	0	1	1	1	1	J8
0	0	0	1	1	1	J9
0	0	0	0	1	1	J10
0	0	0	0	0	1	J11

DM14JH — SPIKE FREE DECODER FOR MOD 14 JOHNSON COUNTER, ACTIVE HI, SEE CM14J — DM14JH

NETWORK SCHEMATIC

FROM THE Q AND QN OUTPUT
OF THE JOHNSON COUNTER

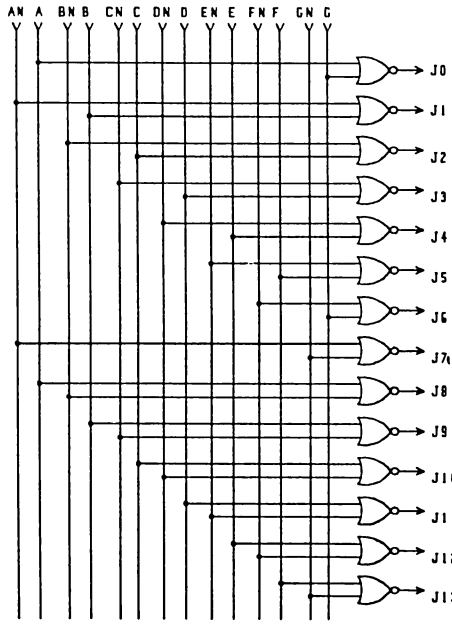

LOGIC DIAGRAM

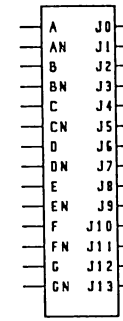

DM14JL — SPIKE FREE DECODER FOR MOD 14 JOHNSON COUNTER, ACTIVE LO, SEE CM14J — DM14JL

NETWORK SCHEMATIC

FROM THE Q AND QN OUTPUT
OF THE JOHNSON COUNTER

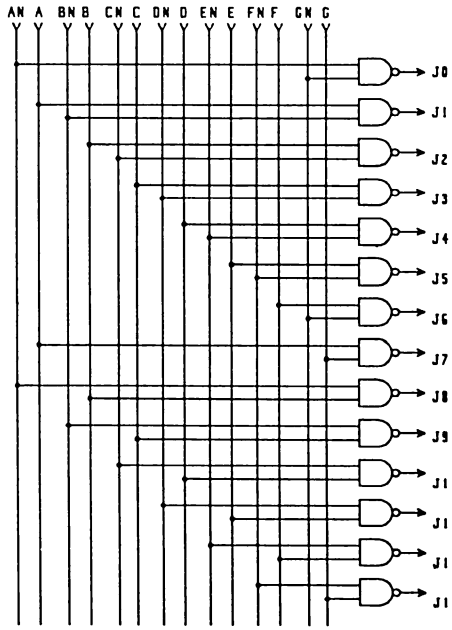

LOGIC DIAGRAM

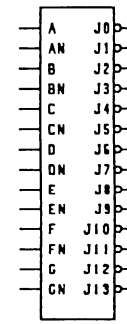

DM16JH — SPIKE FREE DECODER FOR MOD 16 JOHNSON COUNTER, ACTIVE HI, SEE CM16J — DM16JH

NETWORK SCHEMATIC

FROM THE Q AND QN OUTPUT
OF THE JOHNSON COUNTER

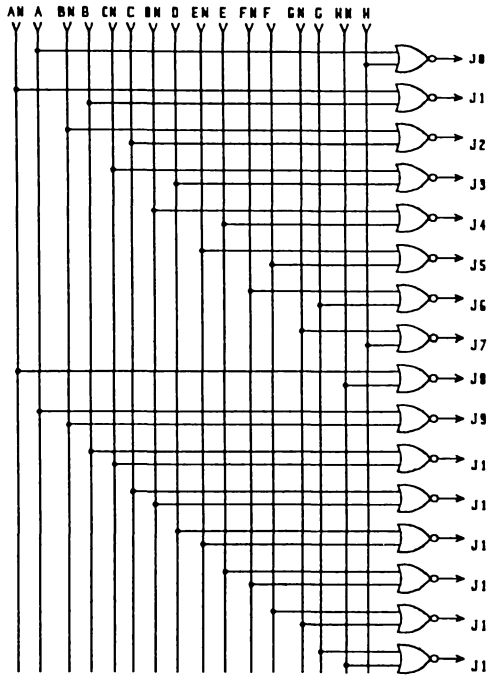

LOGIC DIAGRAM

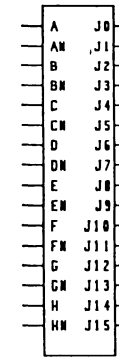

DM16JL — SPIKE FREE DECODER FOR MOD 16 JOHNSON COUNTER, ACTIVE LO, SEE CM16J — DM16JL

NETWORK SCHEMATIC

FROM THE Q AND QN OUTPUT
OF THE JOHNSON COUNTER

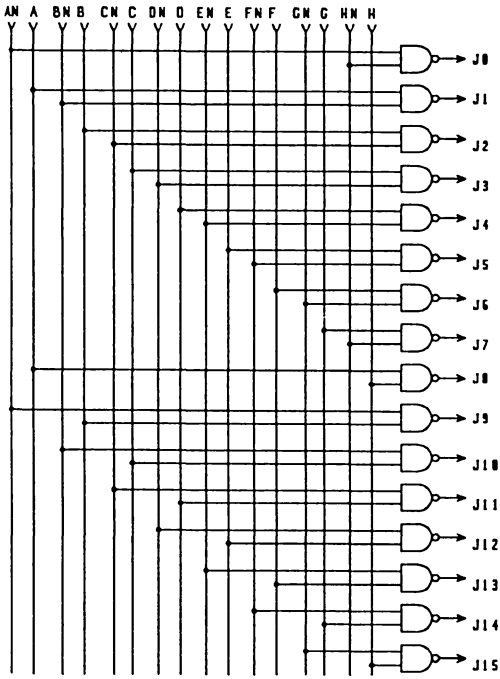

LOGIC DIAGRAM

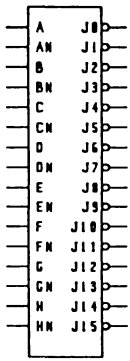

D24GH — 2 TO 4 DECODER, GATED OUTPUTS ACTIVE HI — D24GH

NETWORK SCHEMATIC

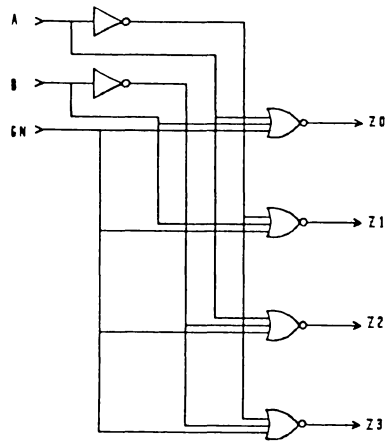

LOGIC DIAGRAM

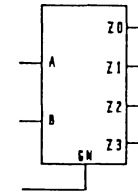

TRUTH TABLE

A	B	GN	Z0	Z1	Z2	Z3
0	0	0	1	0	0	0
1	0	0	0	1	0	0
0	1	0	0	0	1	0
1	1	0	0	0	0	1
X	X	1	0	0	0	0

D24GL — 2 TO 4 DECODER, GATED OUTPUTS ACTIVE LOW — D24GL

NETWORK SCHEMATIC

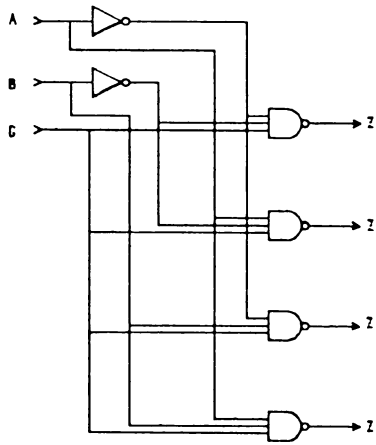

LOGIC DIAGRAM

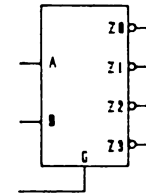

TRUTH TABLE

A	B	G	Z0	Z1	Z2	Z3
0	0	1	0	1	1	1
1	0	1	1	0	1	1
0	1	1	1	1	0	1
1	1	1	1	1	1	0
X	X	0	1	1	1	1

D24H — 2 TO 4 DECODER, OUTPUTS ACTIVE HI — D24H

NETWORK SCHEMATIC

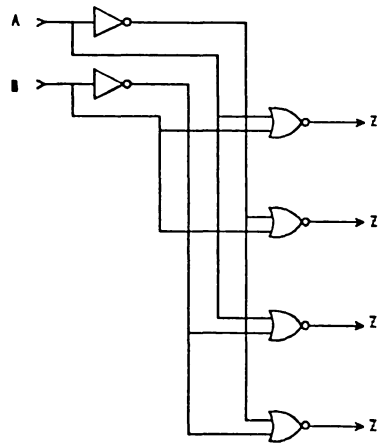

LOGIC DIAGRAM

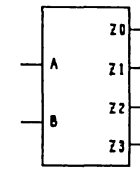

TRUTH TABLE

A	B	Z0	Z1	Z2	Z3
0	0	1	0	0	0
1	0	0	1	0	0
0	1	0	0	1	0
1	1	0	0	1	0

D24L — 2 TO 4 DECODER, OUTPUTS ACTIVE LO — D24L

NETWORK SCHEMATIC

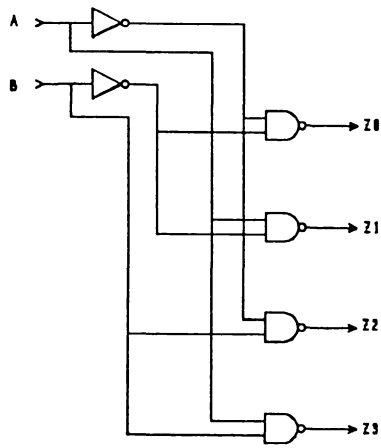

LOGIC DIAGRAM

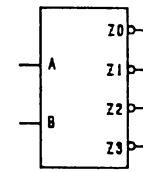

TRUTH TABLE

A	B	Z0	Z1	Z2	Z3
0	0	0	1	1	1
1	0	1	0	1	1
0	1	1	1	0	1
1	1	1	1	1	0

D38GH — 3 TO 8 DECODER, GATED OUTPUTS ACTIVE HI — D38GH

NETWORK SCHEMATIC

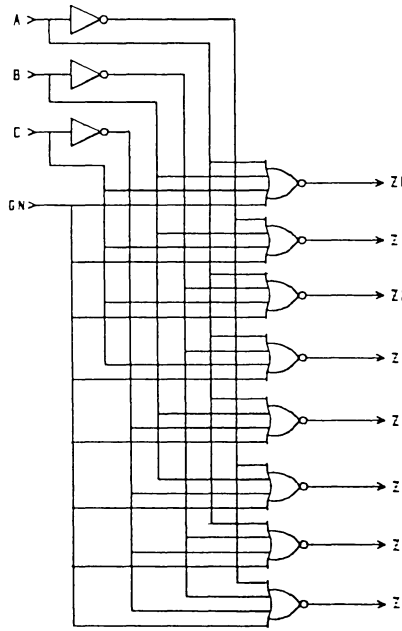

LOGIC DIAGRAM

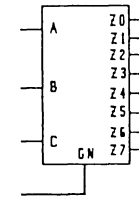

TRUTH TABLE

A	B	C	GN	0	1	2	3	4	5	6	7
0	0	0	0	1	0	0	0	0	0	0	0
1	0	0	0	0	1	0	0	0	0	0	0
0	1	0	0	0	0	1	0	0	0	0	0
1	1	0	0	0	0	0	1	0	0	0	0
0	0	1	0	0	0	0	0	1	0	0	0
1	0	1	0	0	0	0	0	0	1	0	0
0	1	1	0	0	0	0	0	0	0	1	0
1	1	1	0	0	0	0	0	0	0	0	1
X	X	X	1	0	0	0	0	0	0	0	0

D38GL — 3 TO 8 DECODER, GATED OUTPUTS ACTIVE LOW — D38GL

NETWORK SCHEMATIC

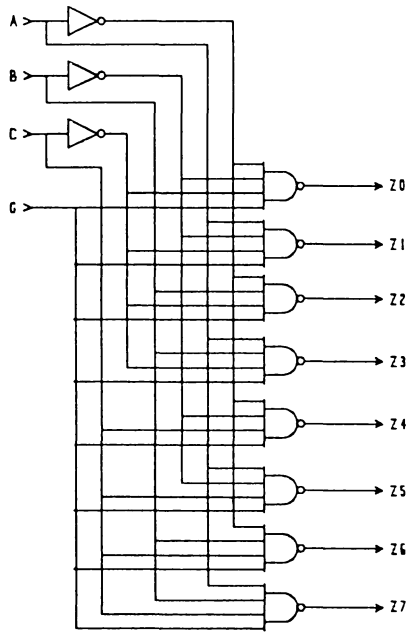

LOGIC DIAGRAM

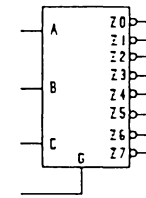

TRUTH TABLE

A	B	C	G	0	1	2	3	4	5	6	7
0	0	0	1	0	1	1	1	1	1	1	1
1	0	0	1	1	0	1	1	1	1	1	1
0	1	0	1	1	1	0	1	1	1	1	1
1	1	0	1	1	1	1	0	1	1	1	1
0	0	1	1	1	1	1	1	0	1	1	1
1	0	1	1	1	1	1	1	1	0	1	1
0	1	1	1	1	1	1	1	1	1	0	1
1	1	1	1	1	1	1	1	1	1	1	0
X	X	X	0	1	1	1	1	1	1	1	1

D38H — 3 TO 8 DECODER, OUTPUTS ACTIVE HI — D38H

NETWORK SCHEMATIC

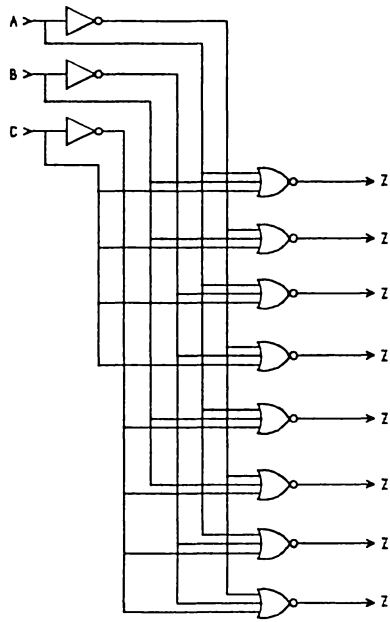

LOGIC DIAGRAM

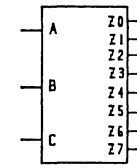

TRUTH TABLE

A	B	C	0	1	2	3	4	5	6	7
0	0	0	1	0	0	0	0	0	0	0
1	0	0	0	1	0	0	0	0	0	0
0	1	0	0	0	1	0	0	0	0	0
1	1	0	0	0	0	1	0	0	0	0
0	0	1	0	0	0	0	1	0	0	0
1	0	1	0	0	0	0	0	1	0	0
0	1	1	0	0	0	0	0	0	1	0
1	1	1	0	0	0	0	0	0	0	1

D38L — 3 TO 8 DECODER, OUTPUTS ACTIVE LOW — D38L

NETWORK SCHEMATIC

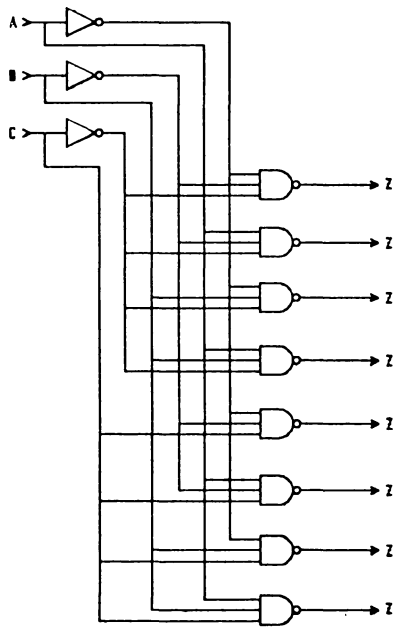

LOGIC DIAGRAM

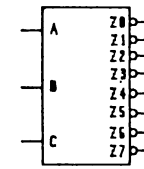

TRUTH TABLE

A	B	C	0	1	2	3	4	5	6	7
0	0	0	0	1	1	1	1	1	1	1
1	0	0	1	0	1	1	1	1	1	1
0	1	0	1	1	0	1	1	1	1	1
1	1	0	1	1	1	0	1	1	1	1
0	0	1	1	1	1	1	0	1	1	1
1	0	1	1	1	1	1	1	0	1	1
0	1	1	1	1	1	1	1	1	0	1
1	1	1	1	1	1	1	1	1	1	0

D410H — 4 TO 10 DECODER, OUTPUTS ACTIVE HI — D410H

NETWORK SCHEMATIC

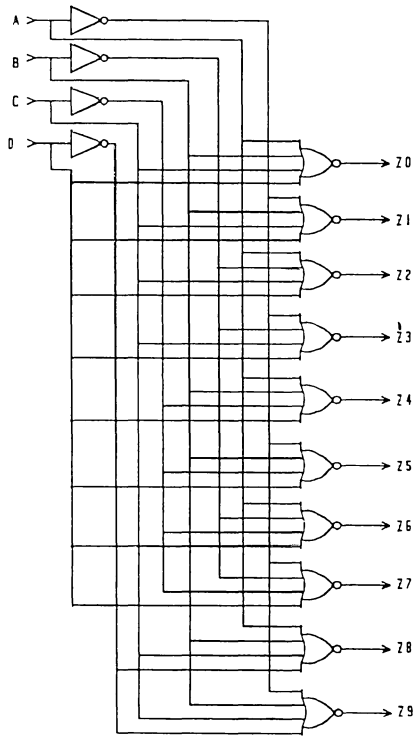

LOGIC DIAGRAM

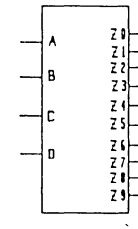

TRUTH TABLE

A	B	C	D	0	1	2	3	4	5	6	7	8	9
0	0	0	0	1	0	0	0	0	0	0	0	0	0
1	0	0	0	0	1	0	0	0	0	0	0	0	0
0	1	0	0	0	0	1	0	0	0	0	0	0	0
1	1	0	0	0	0	0	1	0	0	0	0	0	0
0	0	1	0	0	0	0	0	1	0	0	0	0	0
1	0	1	0	0	0	0	0	0	1	0	0	0	0
0	1	1	0	0	0	0	0	0	0	1	0	0	0
1	1	1	0	0	0	0	0	0	0	0	1	0	0
0	0	0	1	0	0	0	0	0	0	0	0	1	0
1	0	0	1	0	0	0	0	0	0	0	0	0	1
X	1	X	1	0	0	0	0	0	0	0	0	0	0
X	X	1	1	0	0	0	0	0	0	0	0	0	0

D410L — 4 TO 10 DECODER, OUTPUTS ACTIVE LOW — D410L

NETWORK SCHEMATIC

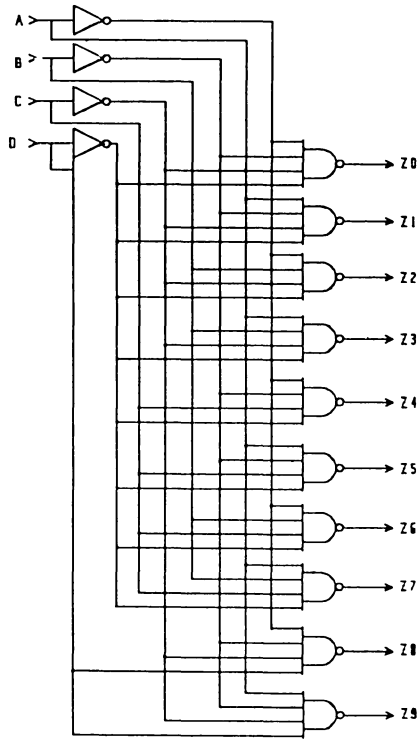

LOGIC DIAGRAM

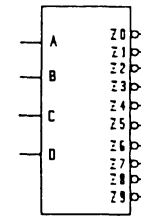

TRUTH TABLE

A	B	C	D	0	1	2	3	4	5	6	7	8	9
0	0	0	0	0	1	1	1	1	1	1	1	1	1
1	0	0	0	1	0	1	1	1	1	1	1	1	1
0	1	0	0	1	1	0	1	1	1	1	1	1	1
1	1	0	0	1	1	1	0	1	1	1	1	1	1
0	0	1	0	1	1	1	1	0	1	1	1	1	1
1	0	1	0	1	1	1	1	1	0	1	1	1	1
0	1	1	0	1	1	1	1	1	1	0	1	1	1
1	1	1	0	1	1	1	1	1	1	1	0	1	1
0	0	0	1	1	1	1	1	1	1	1	1	0	1
1	0	0	1	1	1	1	1	1	1	1	1	1	0
X	1	X	1	1	1	1	1	1	1	1	1	1	1
X	X	1	1	1	1	1	1	1	1	1	1	1	1

FAS2 — 2 BIT BINARY ADDER SUBTRACTER, A+B, A−B — FAS2

NETWORK SCHEMATIC

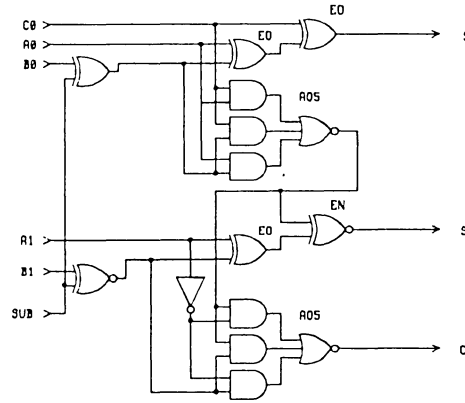

LOGIC DIAGRAM

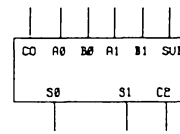

TRUTH TABLE

C0	A0	B0	A1	B1	SUB	S0	S1	S2
C0	A0	B0	A1	B1	0 SUB 1	S0	SEE FA2 S1 SEE FA2	C2

FA1 FULL ADDER FA1

NETWORK SCHEMATIC

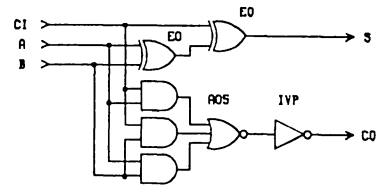

LOGIC DIAGRAM

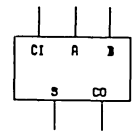

TRUTH TABLE

CI	A	B	S	CO
0	0	0	0	0
1	0	0	1	0
0	1	0	1	0
1	1	0	0	1
0	0	1	1	0
1	0	1	0	1
0	1	1	0	1
1	1	1	1	1

FA2 — 2 BIT BINARY FULL ADDER (SAME AS M82C) — FA2

NETWORK SCHEMATIC

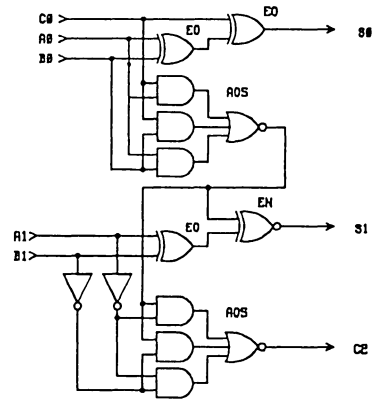

LOGIC DIAGRAM

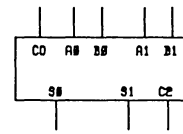

TRUTH TABLE

C0 A0 B0	A1 B1	S0	S1	S2
0 OF 3	0 OF 2	0	0	0
1 OF 3	0 OF 2	1	0	0
2 OF 3	0 OF 2	0	1	0
3 OF 3	0 OF 2	1	1	0
0 OF 3	1 OF 2	0	1	0
1 OF 3	1 OF 2	1	1	0
2 OF 3	1 OF 2	0	0	1
3 OF 3	1 OF 2	1	0	1
0 OF 3	2 OF 2	0	0	1
1 OF 3	2 OF 2	1	0	1
2 OF 3	2 OF 2	0	1	1
3 OF 3	2 OF 2	1	1	1

FA4 — 4 BIT BINARY FULL ADDER — FA4

NETWORK SCHEMATIC

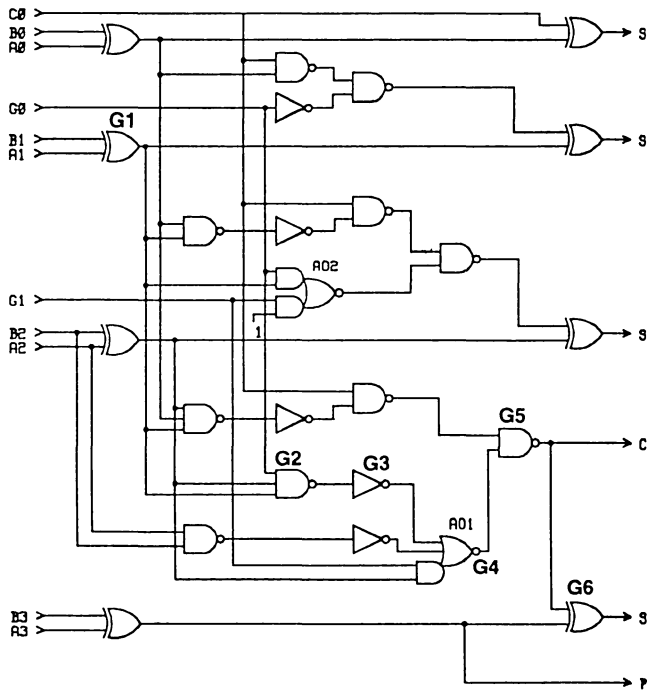

LOGIC DIAGRAM

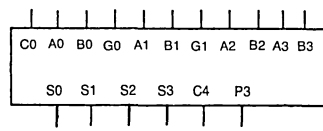

FA16 — 16 BIT FAST ADDER — FA16

NETWORK SCHEMATIC AND LOGIC DIAGRAM

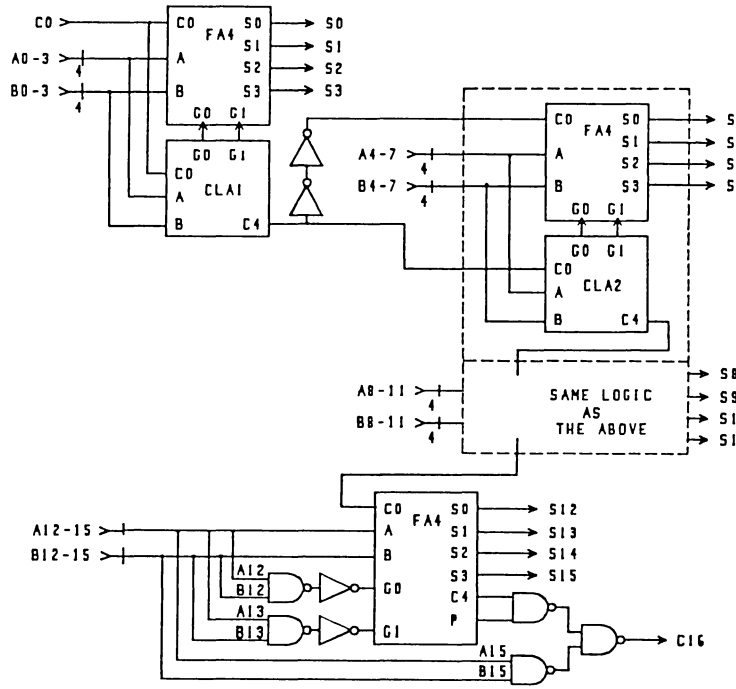

HA1 HALF ADDER HA1

NETWORK SCHEMATIC

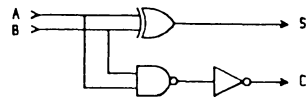

LOGIC DIAGRAM

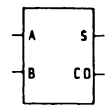

TRUTH TABLE

A	B	S	CD
0	0	0	0
1	0	1	0
0	1	1	0
1	1	0	1

L4 — 4 BIT DATA LATCH — L4

NETWORK SCHEMATIC

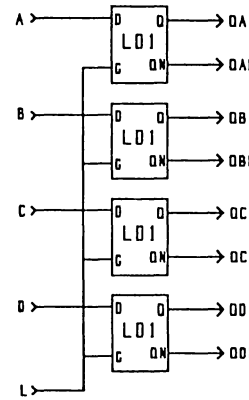

LOGIC DIAGRAM

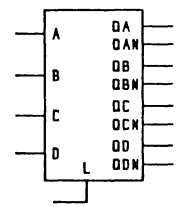

L8 — 8 BIT DATA LATCH — L8

NETWORK SCHEMATIC

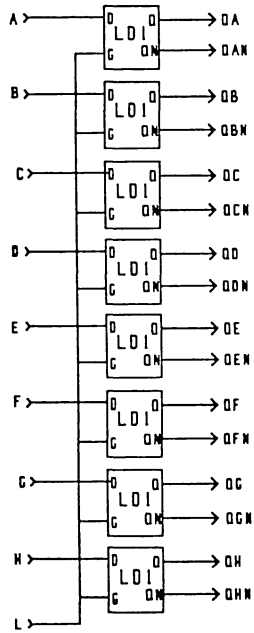

LOGIC DIAGRAM

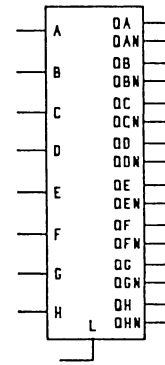

MAG2 — 2 BIT EXTENDABLE MAGNITUDE COMPARITOR (SIMILAR TO 1/2 SN7485) — MAG2

NETWORK SCHEMATIC

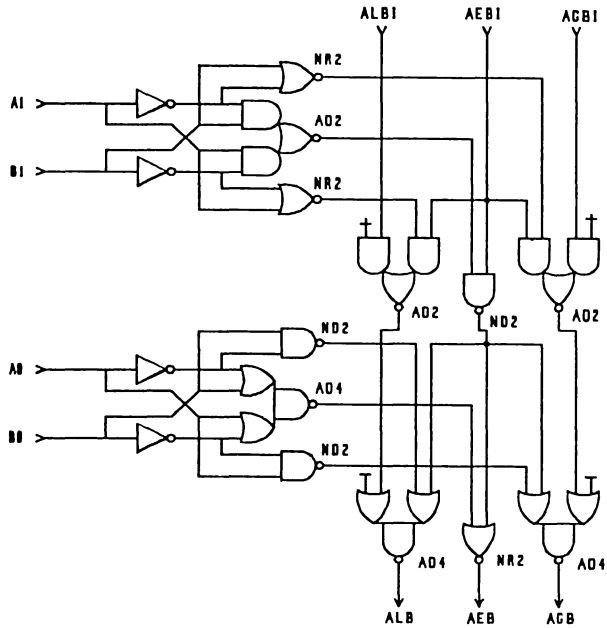

LOGIC DIAGRAM

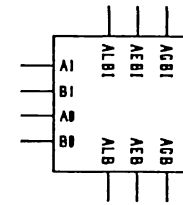

MAG2H — 2 BIT MAGNITUDE COMPARITOR — MAG2H

NETWORK SCHEMATIC

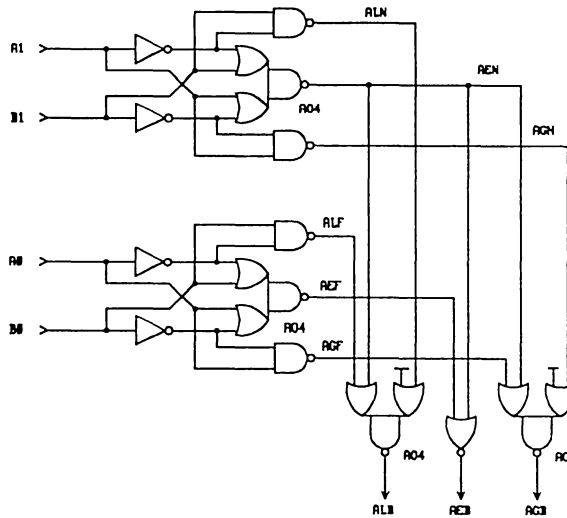

LOGIC DIAGRAM

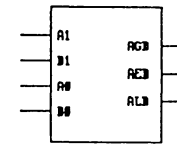

MAG4 — 4 BIT MAGNITUDE COMPARATOR EXPANDABLE (SAME AS M85C OR SN7485) — MAG4

NETWORK SCHEMATIC

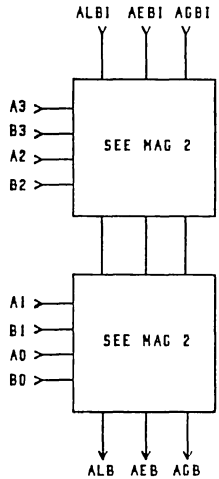

LOGIC DIAGRAM

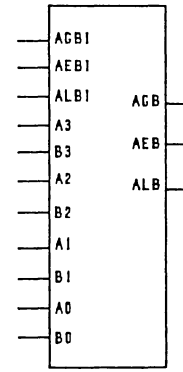

MR41 — 4 BIT REGISTER WITH 2 BIT MULTIPLEXED INPUTS — MR41

NETWORK SCHEMATIC

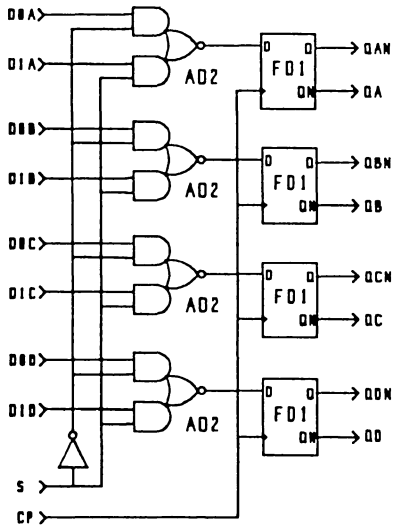

LOGIC DIAGRAM

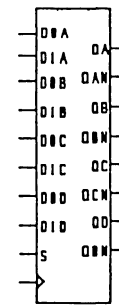

MR42 — 4 BIT REGISTER WITH 2 BIT MULTIPLEXED INPUTS, CLEAR DIRECT — MR42

NETWORK SCHEMATIC

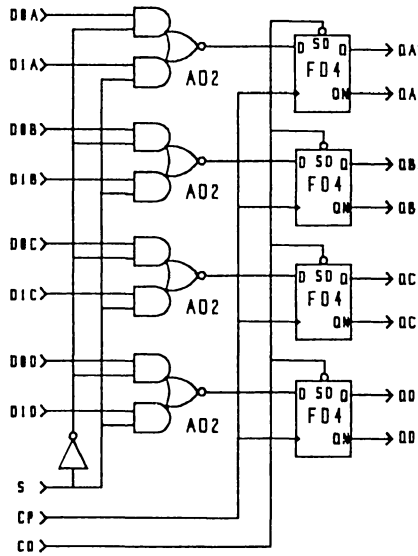

LOGIC DIAGRAM

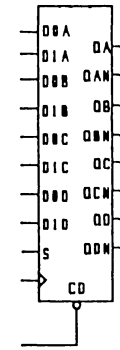

MR43 — 4 BIT REGISTER WITH 2 BIT MULTIPLEXED INPUTS, SYNC CLEAR — MR43

NETWORK SCHEMATIC

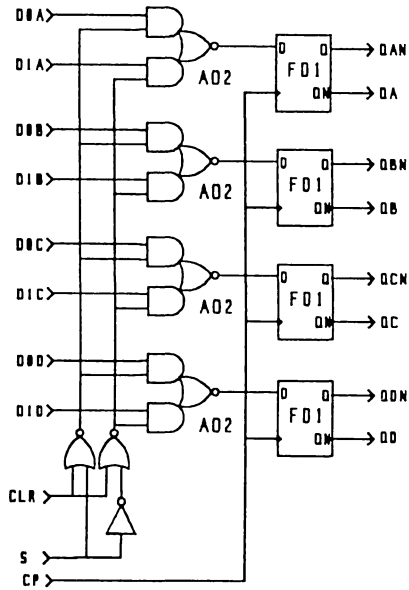

LOGIC DIAGRAM

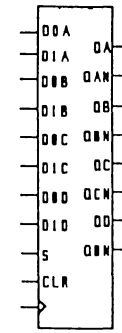

MR44 — 4 BIT REGISTER WITH 2 BIT MULTIPLEXED INPUTS, SYNC CLEAR CD — MR44

NETWORK SCHEMATIC

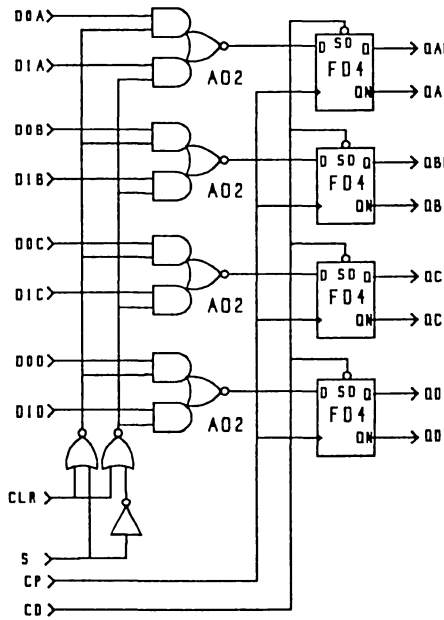

LOGIC DIAGRAM

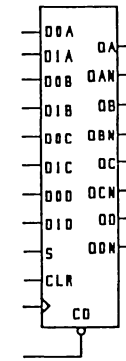

MR81 — 8 BIT REGISTER WITH 2 BIT MULTIPLEXED INPUTS — MR81

NETWORK SCHEMATIC

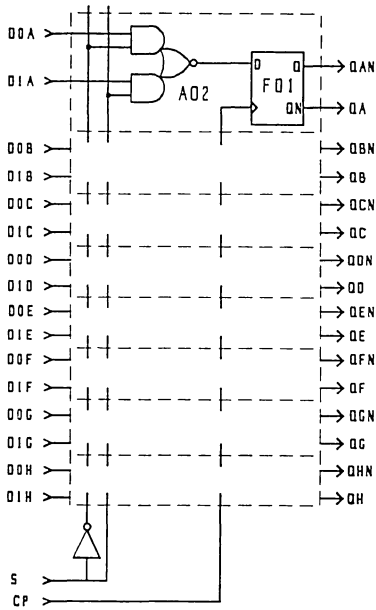

LOGIC DIAGRAM

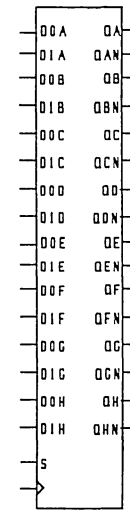

MR82 — 8 BIT REGISTER WITH 2 BIT MULTIPLEXED UNITS, CLEAR DIRECT — MR82

NETWORK SCHEMATIC

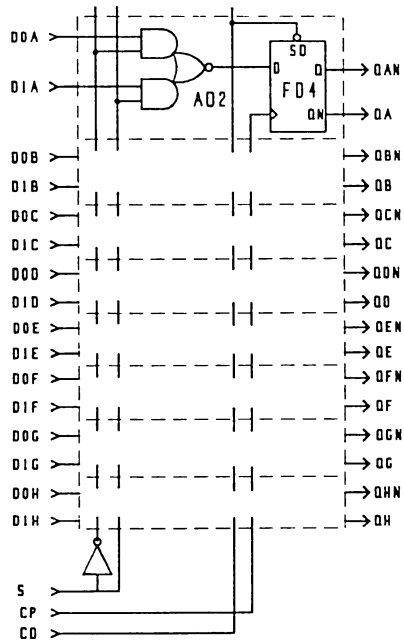

LOGIC DIAGRAM

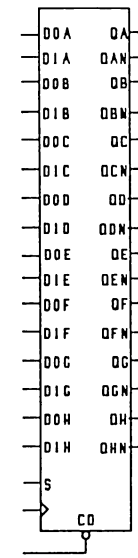

MUX22H — DUAL 2 BIT NON INVERTING MUX — MUX22H

NETWORK SCHEMATIC

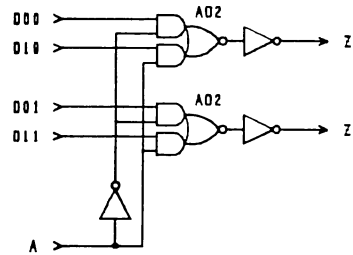

LOGIC DIAGRAM

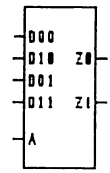

TRUTH TABLE

A	Z(I)
0	D0(I)
1	D1(I)

MUX24H — QUAD 2 BIT NON INVERTING MUX — MUX24H

NETWORK SCHEMATIC

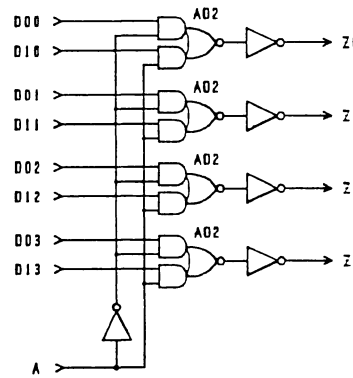

LOGIC DIAGRAM

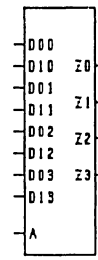

TRUTH TABLE

A	Z(I)
0	D0(I)
1	D1(I)

MUX24L — QUAD 2 BIT INVERTING MUX — MUX24L

NETWORK SCHEMATIC

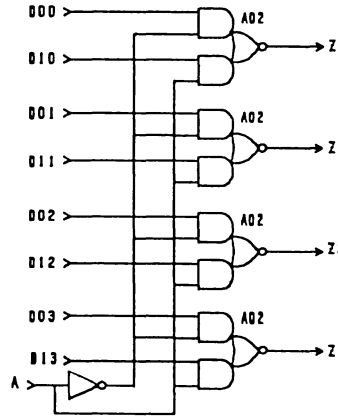

LOGIC DIAGRAM

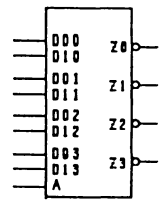

MUX31H — 3 BIT NON INVERTING MUX — MUX31H

NETWORK SCHEMATIC

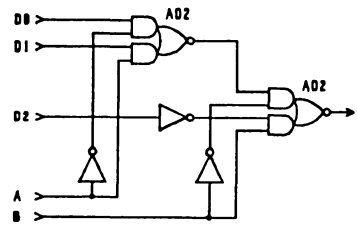

LOGIC DIAGRAM

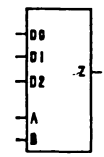

TRUTH TABLE

A	B	Z
0	0	D0
1	0	D1
0	1	D2
1	1	D2

MUX31L — 3 BIT INVERTING MUX — MUX31L

NETWORK SCHEMATIC

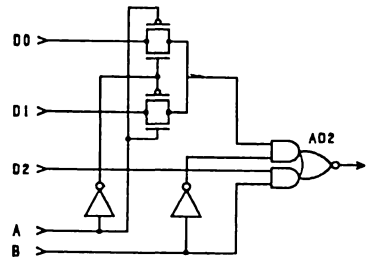

LOGIC DIAGRAM

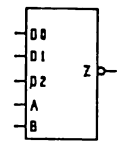

MUX32H — DUAL 3 BIT NON INVERTING MUX — MUX32H

NETWORK SCHEMATIC

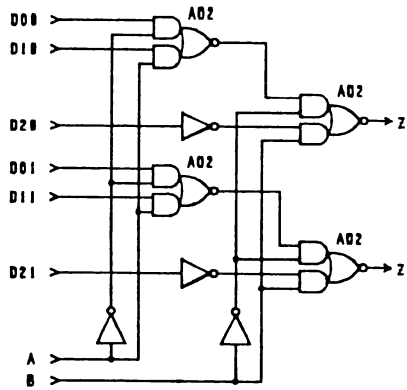

LOGIC DIAGRAM

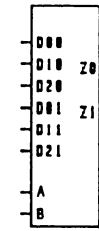

TRUTH TABLE

A	B	Z(I)
0	0	D0(I)
1	0	D1(I)
0	1	D2(I)
1	1	D2(I)

MUX34H — QUAD 3 BIT NON INVERTING MUX — MUX34H

NETWORK SCHEMATIC

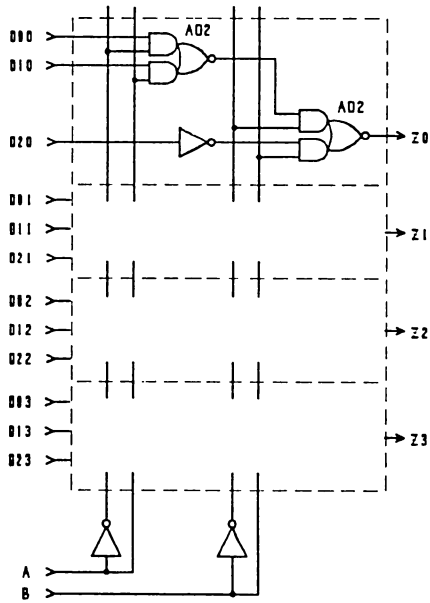

LOGIC DIAGRAM

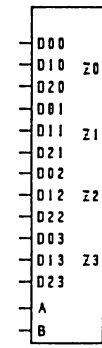

TRUTH TABLE

A	B	Z(I)
0	0	D0(I)
1	0	D1(I)
0	1	D2(I)
1	1	D2(I)

MUX41GH — 4 BIT NON INVERTING MUX, GATED — MUX41GH

NETWORK SCHEMATIC

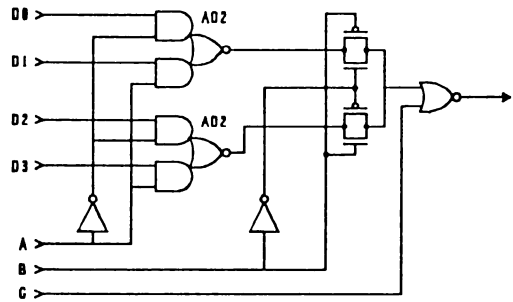

LOGIC DIAGRAM

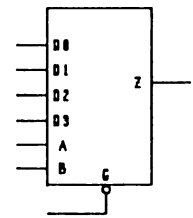

MUX41H — 4 BIT NON INVERTING MUX — MUX41H

NETWORK SCHEMATIC

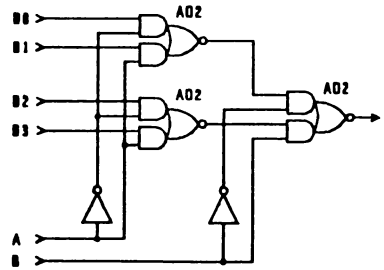

LOGIC DIAGRAM

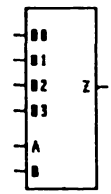

TRUTH TABLE

A	B	Z
0	0	D0
1	0	D1
0	1	D2
1	1	D2

MUX41L	4 BIT INVERTING MUX	MUX41L

NETWORK SCHEMATIC

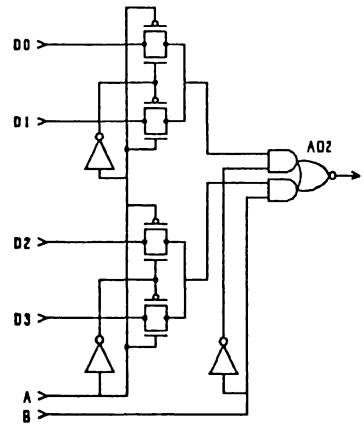

LOGIC DIAGRAM

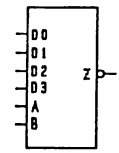

MUX42H — DUAL 4 BIT NON INVERTING MUX — MUX42H

NETWORK SCHEMATIC

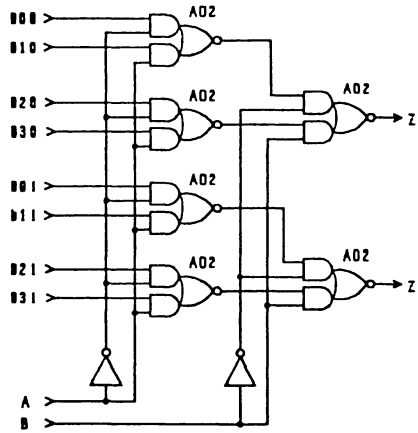

LOGIC DIAGRAM

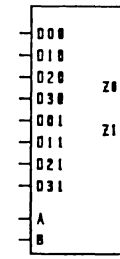

TRUTH TABLE

A	B	Z(I)
0	0	D0(I)
1	0	D1(I)
0	1	D2(I)
1	1	D2(I)

MUX44H — QUAD 4 BIT NON INVERTING MUX — MUX44H

NETWORK SCHEMATIC

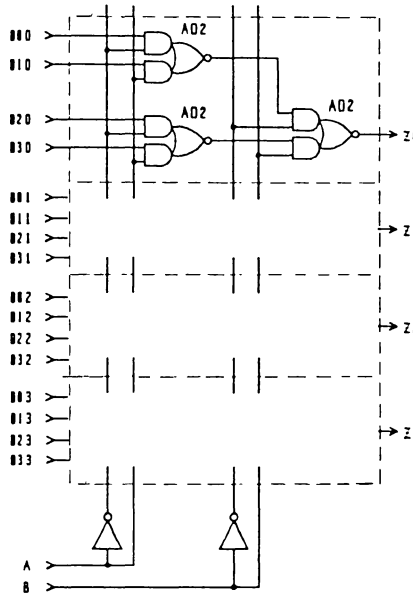

LOGIC DIAGRAM

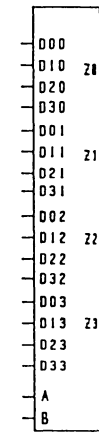

TRUTH TABLE

A	B	Z(I)
0	0	D0(I)
1	0	D1(I)
0	1	D2(I)
1	1	D3(I)

MUX51H — 5 BIT NON INVERTING MUX — MUX51H

NETWORK SCHEMATIC

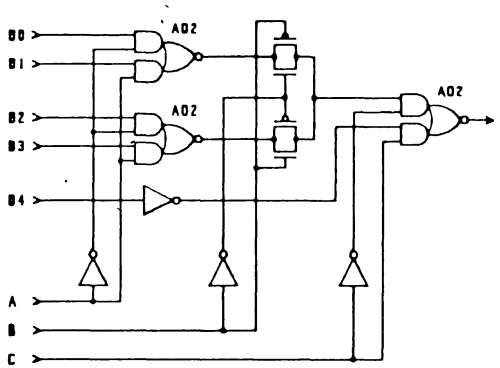

LOGIC DIAGRAM

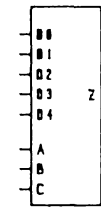

TRUTH TABLE

A	B	C	Z
0	0	0	D0
1	0	0	D1
0	1	0	D2
1	1	0	D3
0	0	1	D4
1	0	1	D4
0	1	1	D4
1	1	1	D4

MUX51L — 5 BIT INVERTING MUX — MUX51L

NETWORK SCHEMATIC

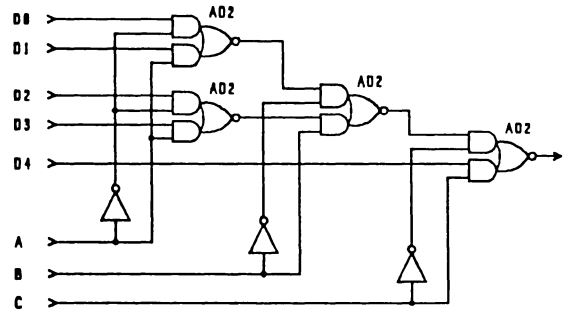

LOGIC DIAGRAM

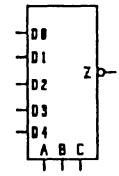

MUX52H — DUAL 5 BIT NON INVERTING MUX — MUX52H

NETWORK SCHEMATIC

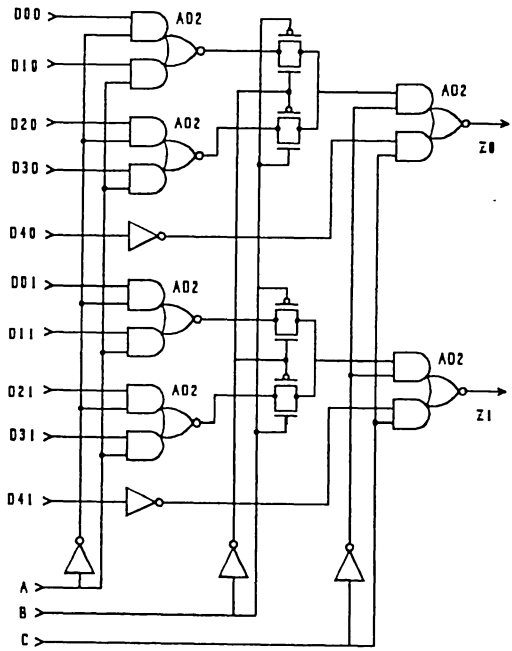

LOGIC DIAGRAM

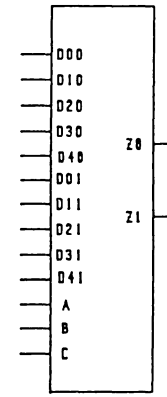

TRUTH TABLE

A	B	C	Z(I)
0	0	0	D0(I)
1	0	0	D1(I)
0	1	0	D2(I)
1	1	0	D2(I)
0	0	1	D4(I)
1	0	1	D4(I)
0	1	1	D4(I)
1	1	1	D4(I)

MUX54H — QUAD 5 BIT NON INVERTING MUX — MUX54H

NETWORK SCHEMATIC

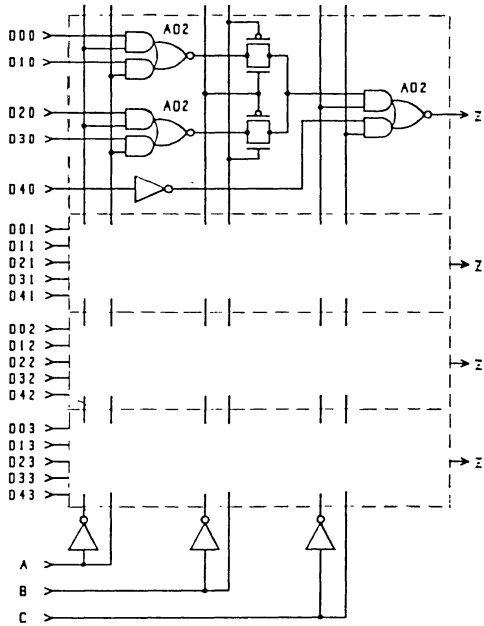

LOGIC DIAGRAM

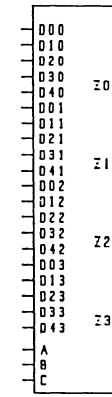

TRUTH TABLE

A	B	C	Z(I)
0	0	0	D0(I)
1	0	0	D1(I)
0	1	0	D2(I)
1	1	0	D2(I)
0	0	1	D4(I)
1	0	1	D4(I)
0	1	1	D4(I)
1	1	1	D4(I)

MUX61H — 6 BIT NON INVERTING MUX — MUX61H

NETWORK SCHEMATIC

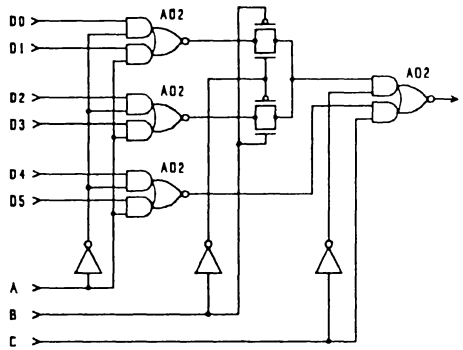

LOGIC DIAGRAM

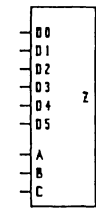

TRUTH TABLE

A	B	C	Z
0	0	0	D0
1	0	0	D1
0	1	0	D2
1	1	0	D3
0	0	1	D4
1	0	1	D5
0	1	1	D4
1	1	1	D5

MUX61L — 6 BIT INVERTING MUX — MUX61L

NETWORK SCHEMATIC

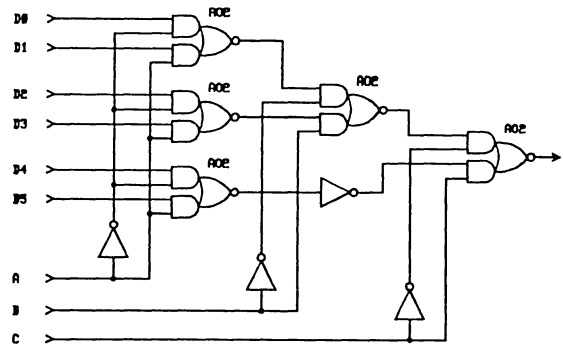

LOGIC DIAGRAM

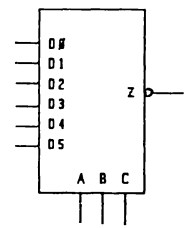

MUX62H — DUAL 6 BIT NON INVERTING MUX — MUX62H

NETWORK SCHEMATIC

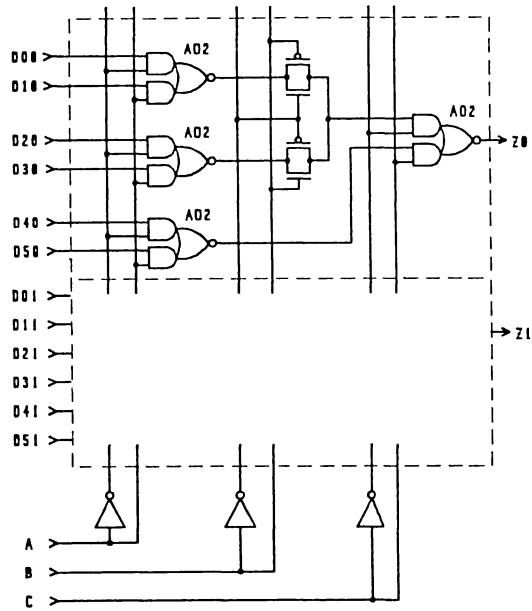

TRUTH TABLE

A	B	C	Z(I)
0	0	0	D0(I)
1	0	0	D1(I)
0	1	0	D2(I)
1	1	0	D3(I)
0	0	1	D4(I)
1	0	1	D5(I)
0	1	1	D4(I)
1	1	1	D5(I)

MUX64H — QUAD 6 BIT NON INVERTING MUX — MUX64H

NETWORK SCHEMATIC

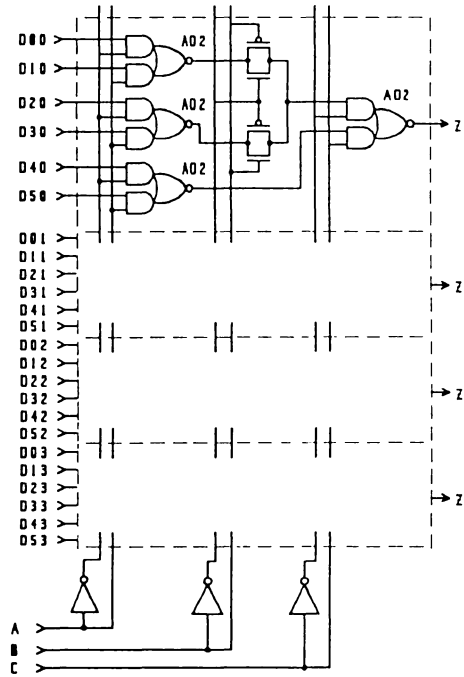

TRUTH TABLE

A	B	C	Z(I)
0	0	0	D0(I)
1	0	0	D1(I)
0	1	0	D2(I)
1	1	0	D3(I)
0	0	1	D4(I)
1	0	1	D5(I)
0	1	1	D4(I)
1	1	1	D5(I)

MUX71H — 7 BIT NON INVERTING MUX — MUX71H

NETWORK SCHEMATIC

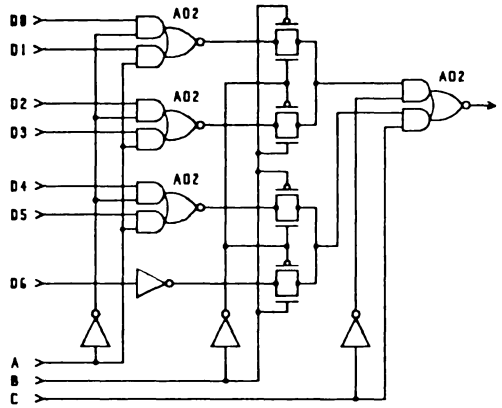

LOGIC DIAGRAM

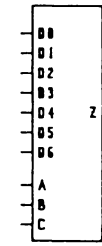

TRUTH TABLE

A	B	C	Z
0	0	0	D0
1	0	0	D1
0	1	0	D2
1	1	0	D3
0	0	1	D4
1	0	1	D5
0	1	1	D6
1	1	1	D6

MUX71L — 7 BIT INVERTING MUX — MUX71L

NETWORK SCHEMATIC

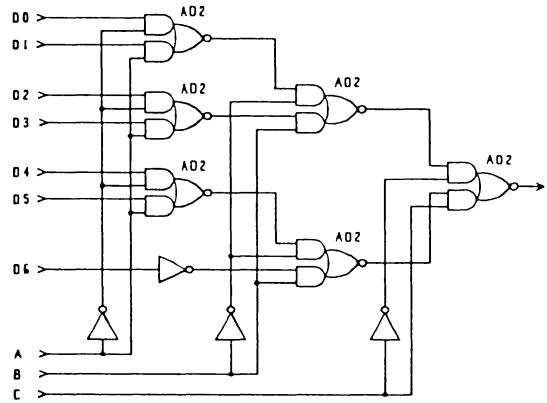

LOGIC DIAGRAM

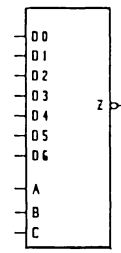

MUX72H — DUAL 7 BIT NON INVERTING MUX — MUX72H

NETWORK SCHEMATIC

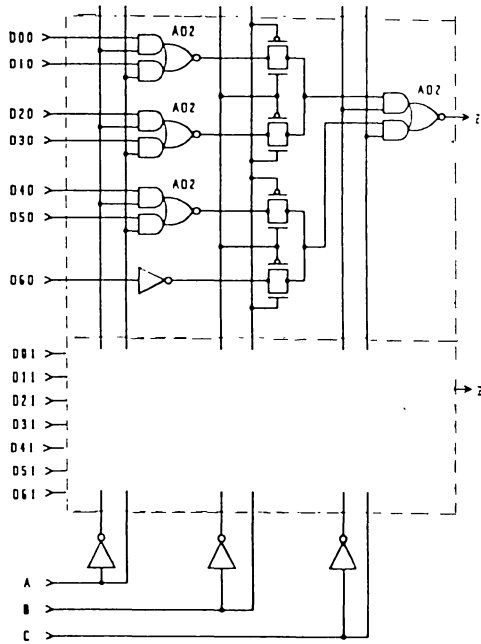

TRUTH TABLE

A	B	C	Z(I)
0	0	0	D0(I)
1	0	0	D1(I)
0	1	0	D2(I)
1	1	0	D3(I)
0	0	1	D4(I)
1	0	1	D5(I)
0	1	1	D6(I)
1	1	1	D6(I)

MUX74H — QUAD 7 BIT NON INVERTING MUX — MUX74H

NETWORK SCHEMATIC

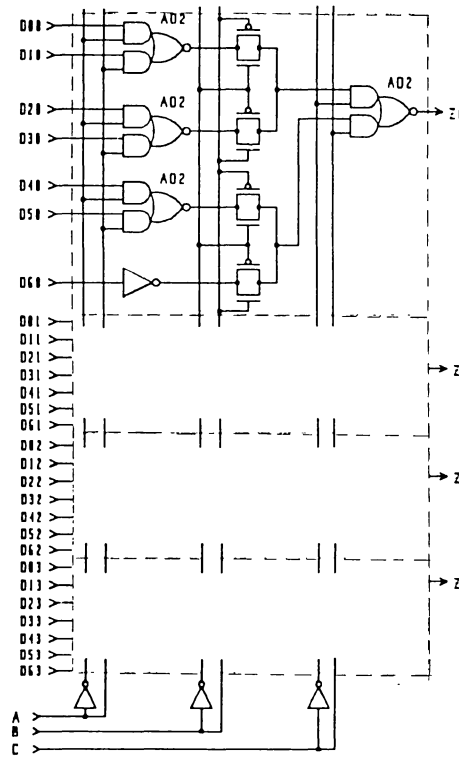

TRUTH TABLE

A	B	C	Z(I)
0	0	0	D0(I)
1	0	0	D1(I)
0	1	0	D2(I)
1	1	0	D3(I)
0	0	1	D4(I)
1	0	1	D5(I)
0	1	1	D6(I)
1	1	1	D6(I)

MUX81H — 8 BIT NON INVERTING MUX — MUX81H

NETWORK SCHEMATIC

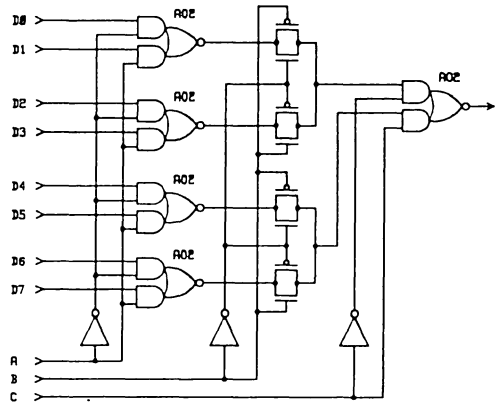

LOGIC DIAGRAM

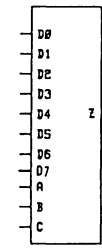

TRUTH TABLE

A	B	C	Z
0	0	0	D0
1	0	0	D1
0	1	0	D2
1	1	0	D3
0	0	1	D4
1	0	1	D5
0	1	1	D6
1	1	1	D7

MUX82H — DUAL 8 BIT NON INVERTING MUX — MUX82H

NETWORK SCHEMATIC

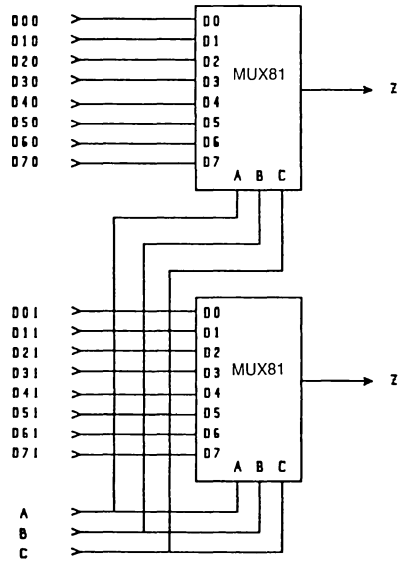

LOGIC DIAGRAM

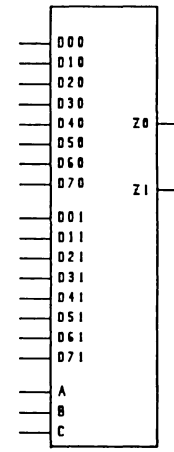

MUX84H QUAD 8 BIT NON-INVERTING MUX MUX84H

NETWORK SCHEMATIC AND LOGIC DIAGRAM

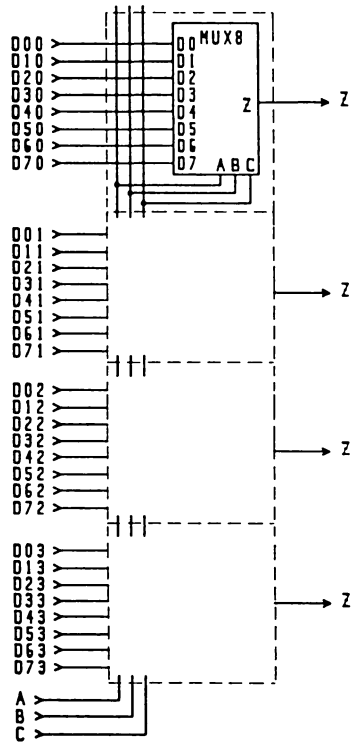

M42C 4 TO 10 DECODER M42C

NETWORK SCHEMATIC

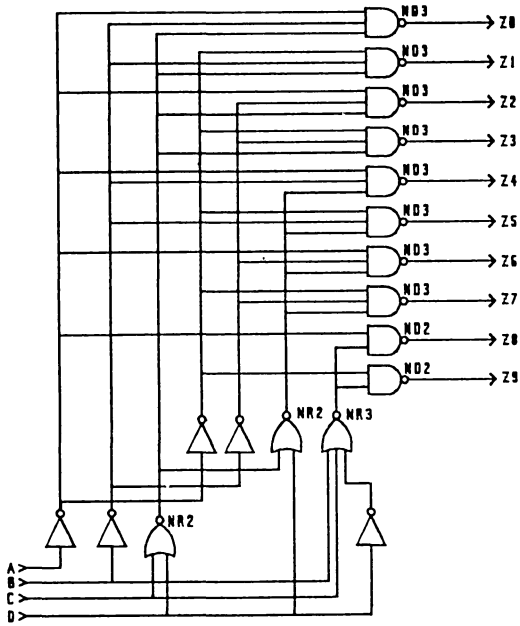

LOGIC DIAGRAM

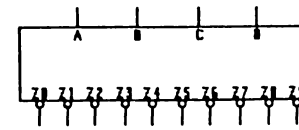

M82C	2 BIT BINARY FULL ADDER (SAME AS FA2)	M82C

NETWORK SCHEMATIC

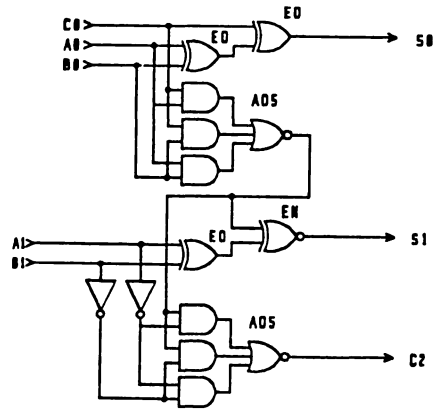

LOGIC DIAGRAM

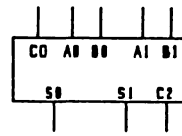

M85C — 4 BIT MAGNITUDE COMPARATOR EXPANDABLE (SIMILAR TO MAG4 OR SN7485) — M85C

NETWORK SCHEMATIC

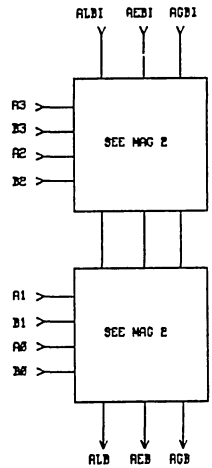

LOGIC DIAGRAM

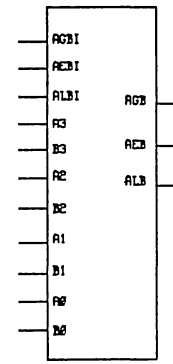

M138C GATED 3 TO 8 DECODER M138C

NETWORK SCHEMATIC

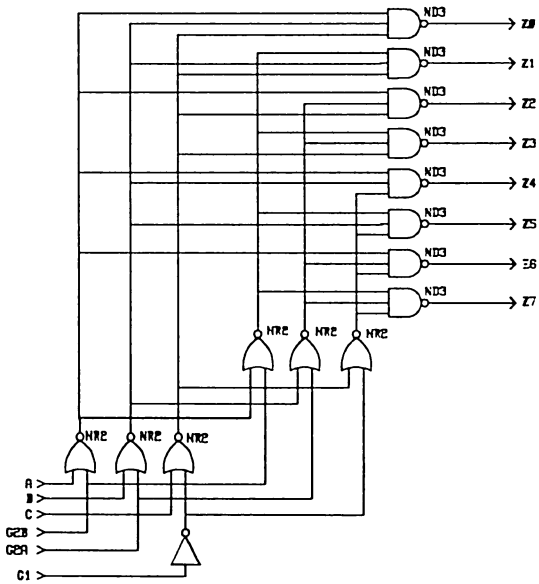

LOGIC DIAGRAM

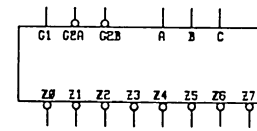

M138D — GATED 3 TO 8 DECODER OUTPUTS ACTIVE LO (74138) — M138D

NETWORK SCHEMATIC

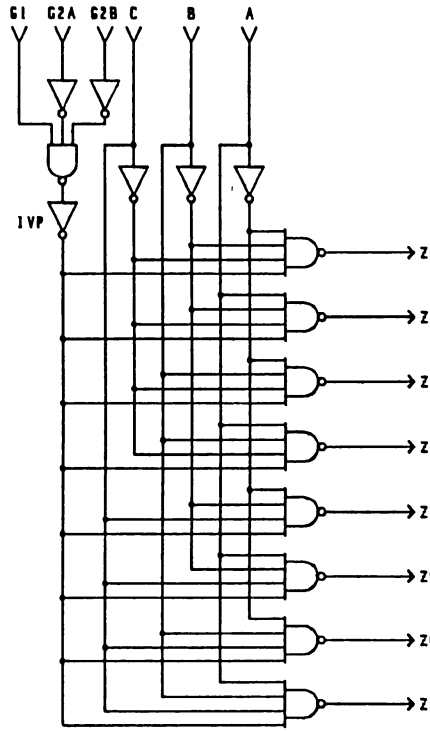

LOGIC DIAGRAM

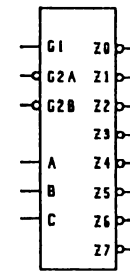

M150C 16 INPUT GATED INVERTING MUX M150C

NETWORK SCHEMATIC

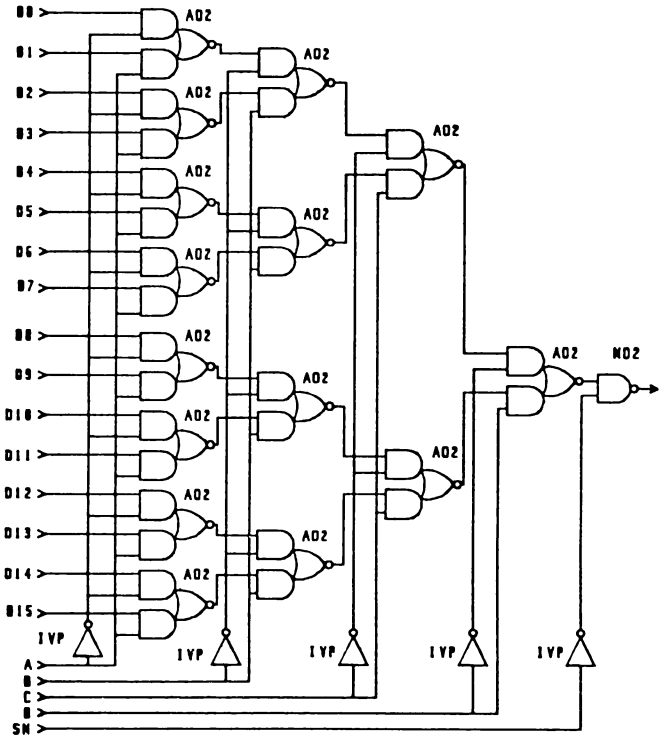

LOGIC DIAGRAM

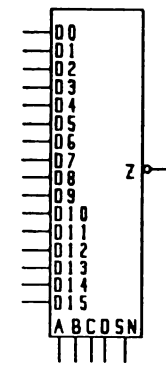

M151C — 8 INPUT GATED MUX — M151C

NETWORK SCHEMATIC

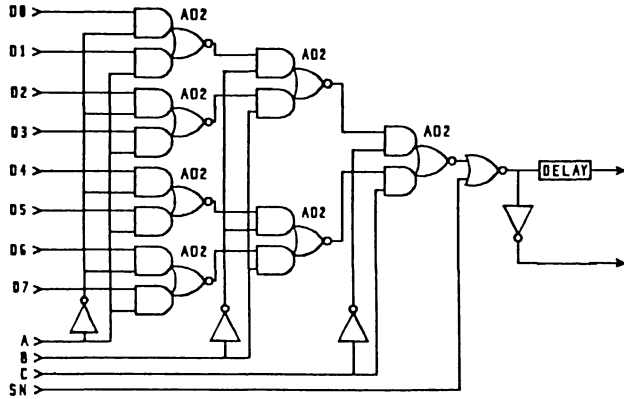

LOGIC DIAGRAM

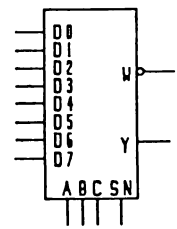

M152C 8 INPUT INVERTING MUX M152C

NETWORK SCHEMATIC

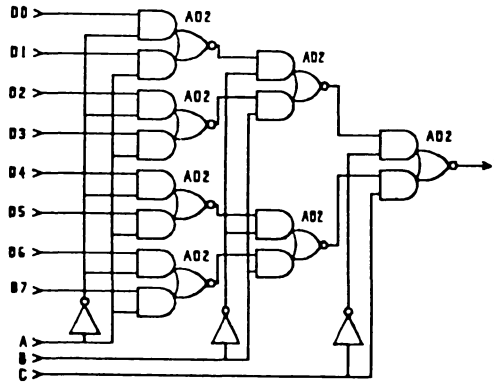

LOGIC DIAGRAM

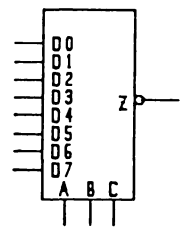

M153C DUAL 4 INPUT MUX M153C

NETWORK SCHEMATIC

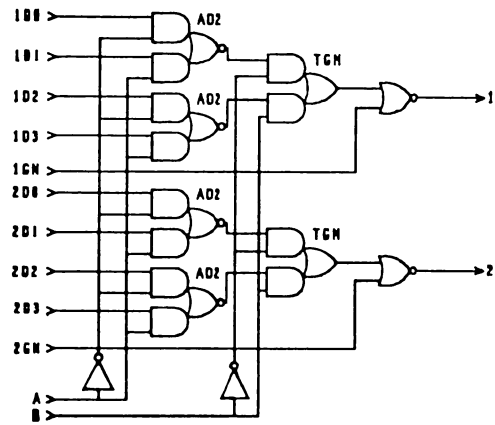

LOGIC DIAGRAM

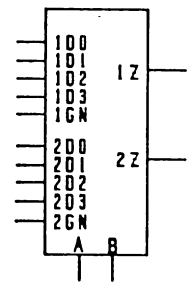

M157C — QUAD 2 INPUT GATED NON INVERTING MUX — M157C

NETWORK SCHEMATIC

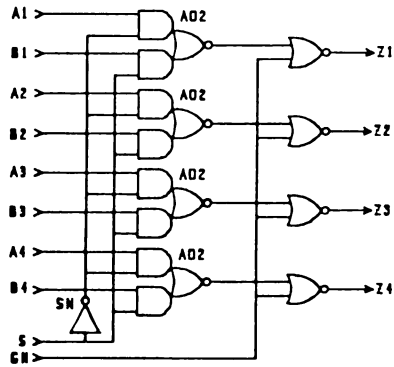

LOGIC DIAGRAM

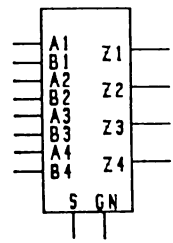

M158C — QUAD 2 INPUT GATED INVERTING MUX — M158C

NETWORK SCHEMATIC

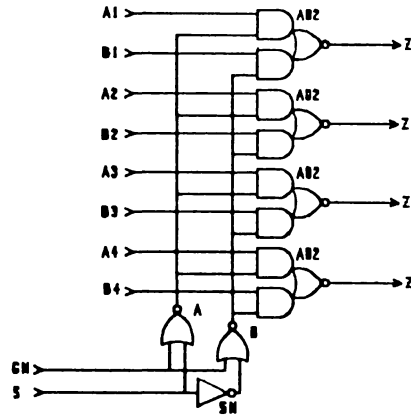

LOGIC DIAGRAM

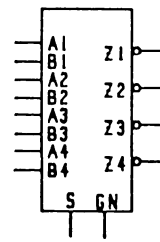

M160C — SYNC 4 BIT BCD COUNTER (74LS160) — M160C

NETWORK SCHEMATIC

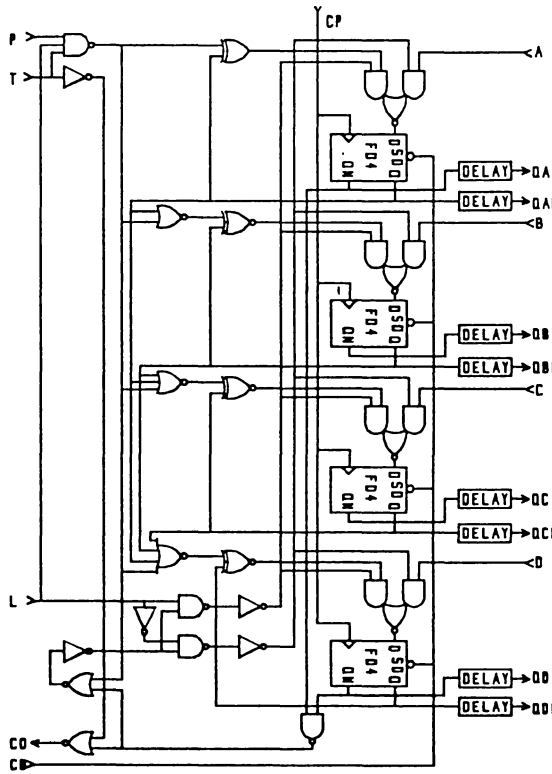

LOGIC DIAGRAM

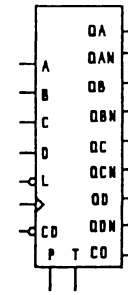

M160D — SYNC 4 BIT BCD COUNTER (74LS160) — M160D

NETWORK SCHEMATIC

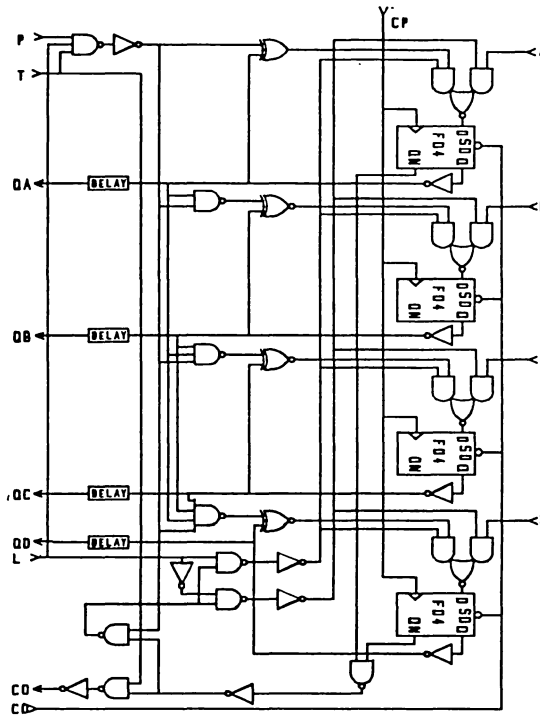

LOGIC DIAGRAM

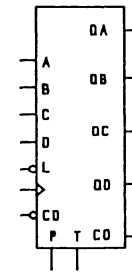

M161D — SYNC 4 BIT BCD COUNTER (74LS161) — M161D

NETWORK SCHEMATIC

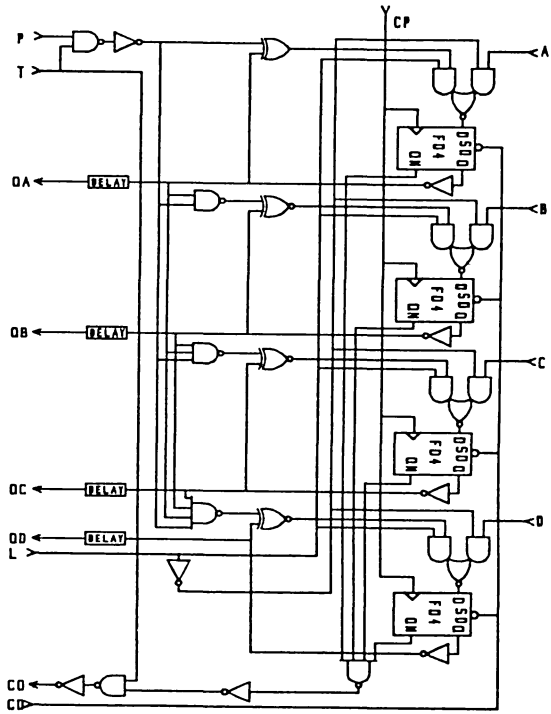

LOGIC DIAGRAM

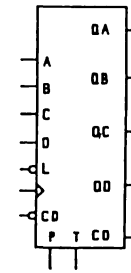

M161C — SYNC 4 BIT COUNTER (74LS161) — M161C

NETWORK SCHEMATIC

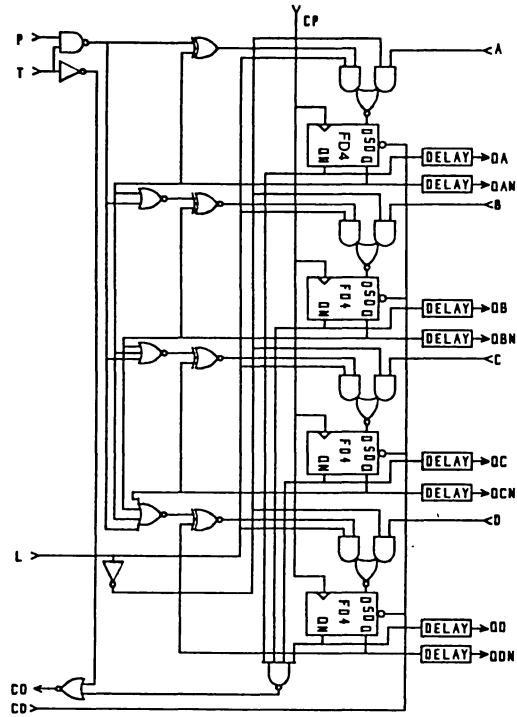

LOGIC DIAGRAM

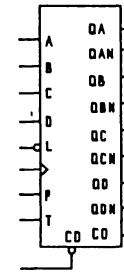

M162C — SYNC 4 BIT BCD COUNTER (74LS162) — M162C

NETWORK SCHEMATIC

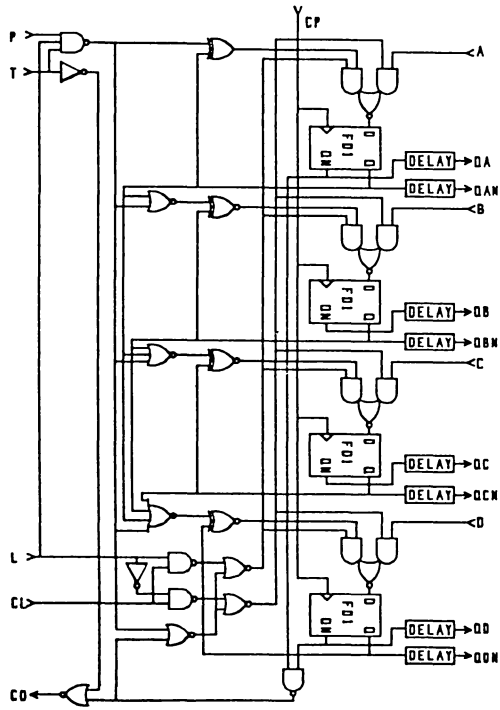

LOGIC DIAGRAM

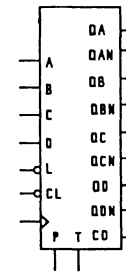

M162D — SYNC 4 BIT BCD COUNTER (74LS162) — M162D

NETWORK SCHEMATIC

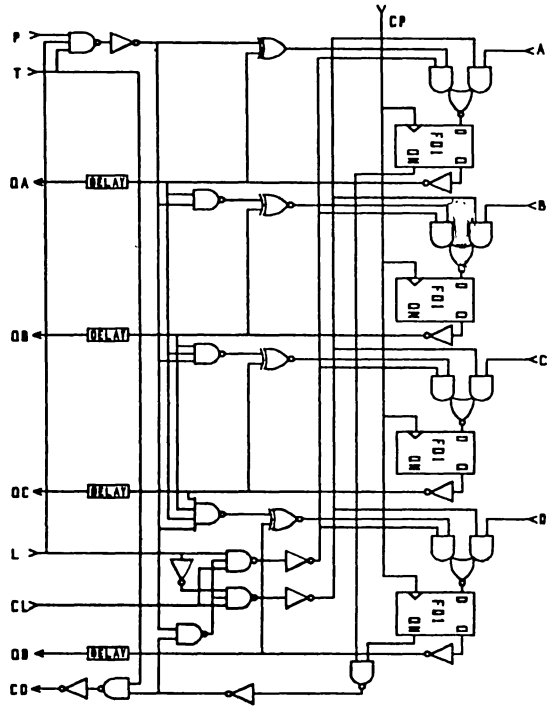

LOGIC DIAGRAM

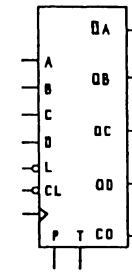

M163C — SYNC 4 BIT COUNTER (74LS163) — M163C

NETWORK SCHEMATIC

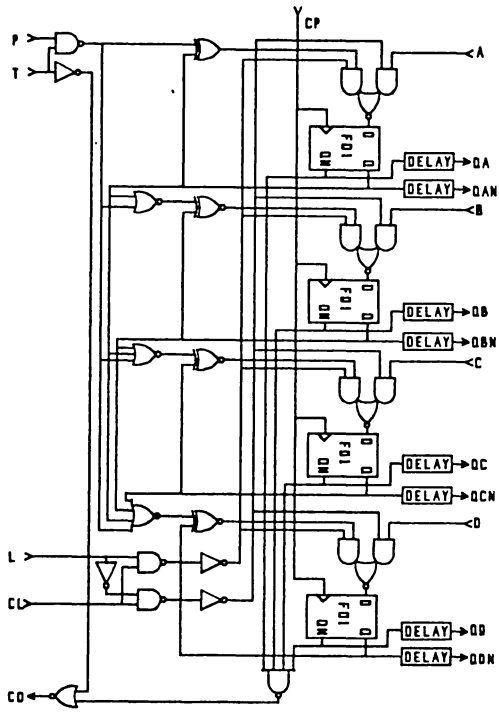

LOGIC DIAGRAM

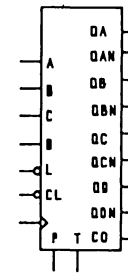

M163D — SYNC 4 BIT BINARY COUNTER (74LS163) — M163D

NETWORK SCHEMATIC

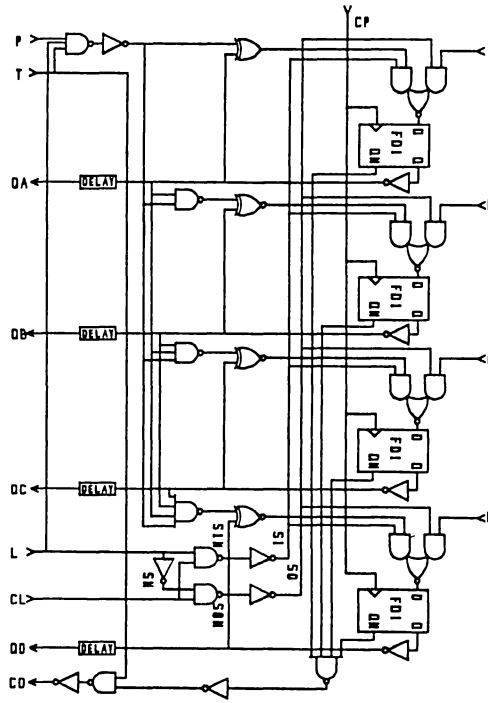

LOGIC DIAGRAM

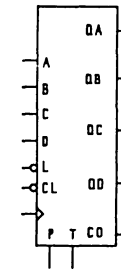

M163F	SYNC 4 BIT COUNTER (74LS163) OPTIMIZED FOR MAX CLOCK FREQ.	M163F

NETWORK SCHEMATIC

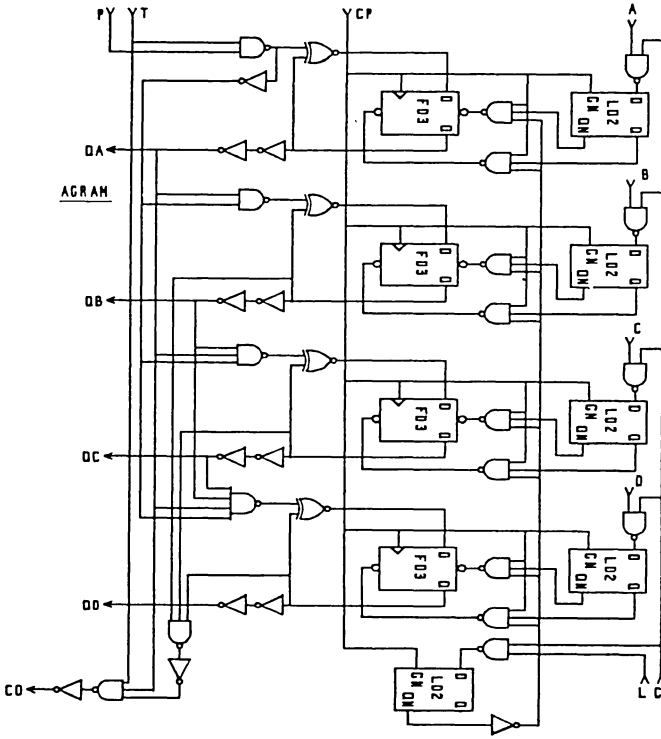

LOGIC DIAGRAM

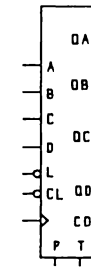

M169C — 4 BIT U/D COUNTER (74LS169) — M169C

NETWORK SCHEMATIC

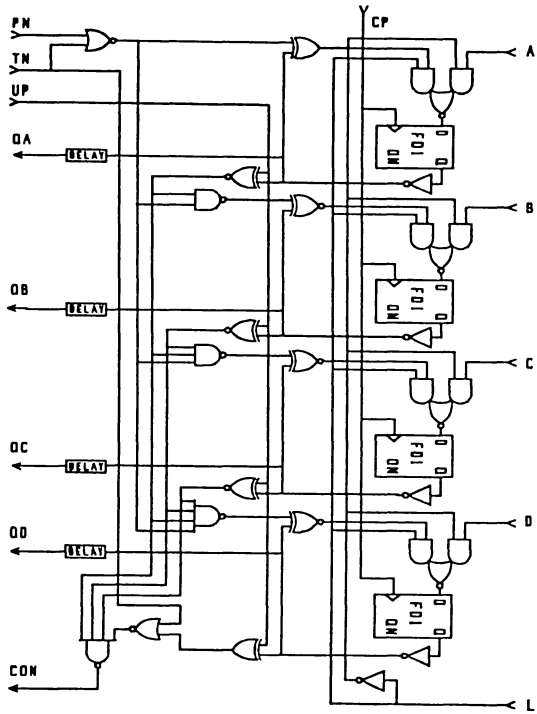

LOGIC DIAGRAM

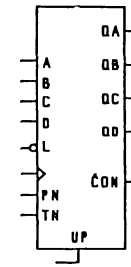

M244C DUAL 4 BIT TRISTATE BUFFER ON CHIP M244C

ELECTRICAL SCHEMATIC

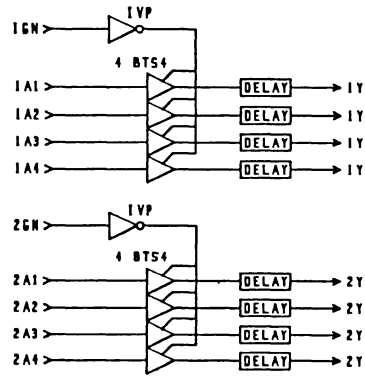

LOGIC DIAGRAM

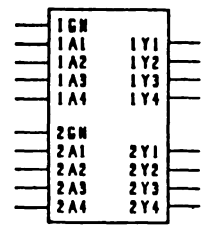

M244XC DUAL 4 BIT TRISTATE OUTPUT BUFFER OFF CHIP M244XC

ELECTRICAL SCHEMATIC

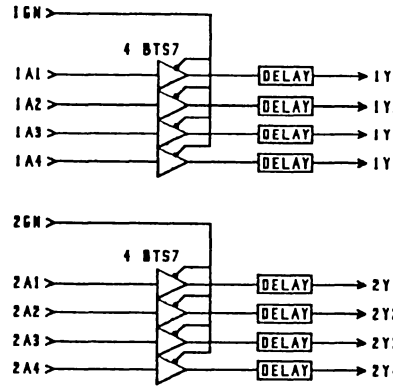

LOGIC DIAGRAM

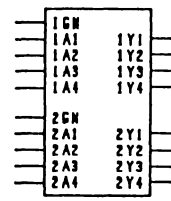

M2901 — 4 BIT SLICE ALU — M2901

BLOCK DIAGRAM

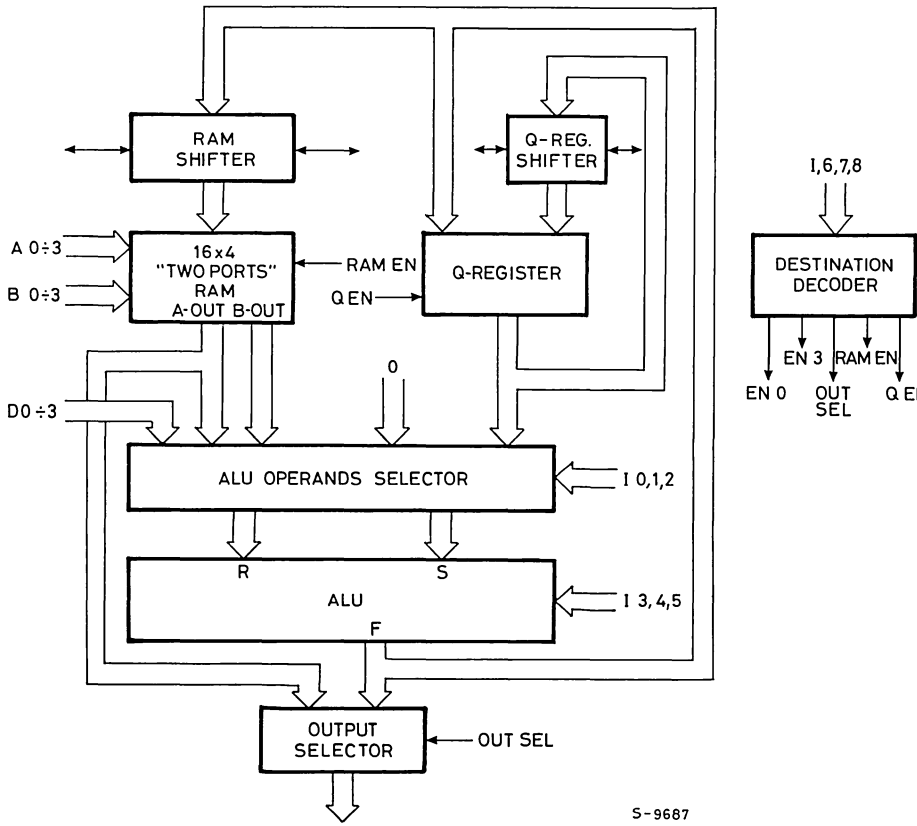

PAR8 — 8 BIT ODD PARITY DETECTOR — PAR8

NETWORK SCHEMATIC

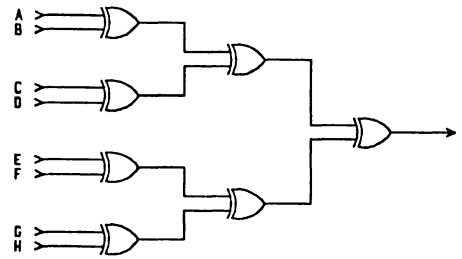

LOGIC DIAGRAM

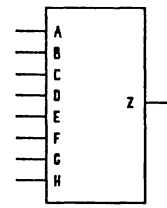

IF NUMBER OF TRUE
(1) INPUT IS ODD
THEN Z = 1

PAR9 — 9 BIT ODD PARITY DETECTOR — PAR9

NETWORK SCHEMATIC

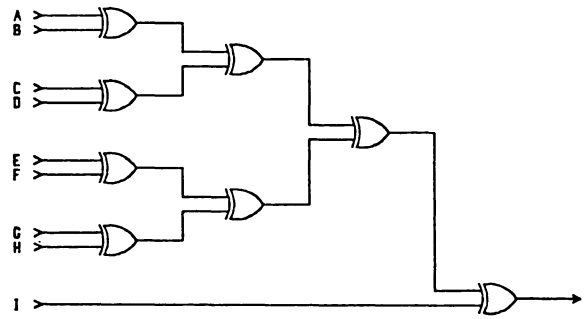

LOGIC DIAGRAM

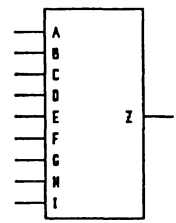

IF NUMBER OF TRUE
(1) INPUT IS ODD
THEN Z = 1

PS2	DIVIDE BY 2 EXTERNAL CLOCK PRESCALER WITH NO INPUT PROTECTION	PS2

NETWORK SCHEMATIC

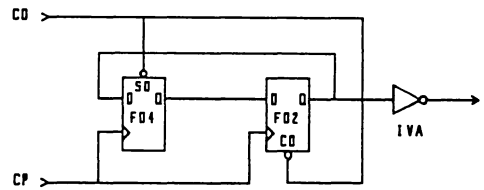

LOGIC DIAGRAM

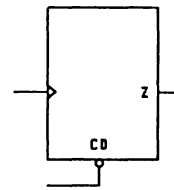

PS3	DIVIDE BY 3 EXTERNAL CLOCK PRESCALER WITH NO INPUT PROTECTION	PS3

NETWORK SCHEMATIC

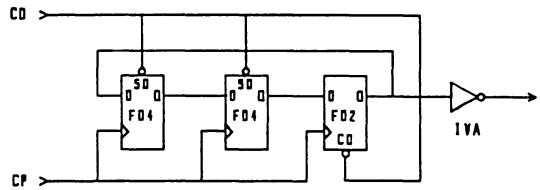

LOGIC DIAGRAM

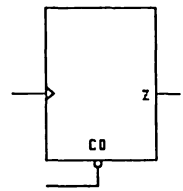

PS4	DIVIDE BY 4 EXTERNAL CLOCK PRESCALER WITH NO INPUT PROTECTION	PS4

NETWORK SCHEMATIC

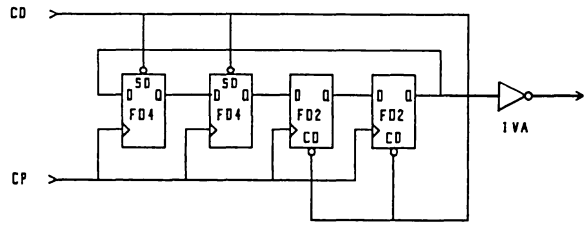

LOGIC DIAGRAM

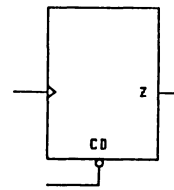

R41 4 BIT DATA REGISTER R41

NETWORK SCHEMATIC

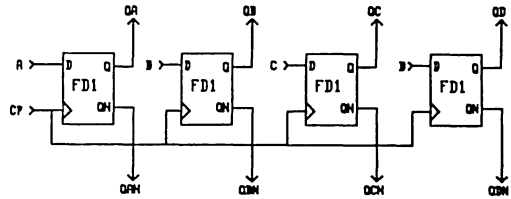

LOGIC DIAGRAM

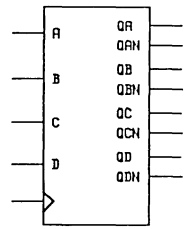

R42 — 4 BIT DATA REGISTER, CLEAR DIRECT — R42

NETWORK SCHEMATIC

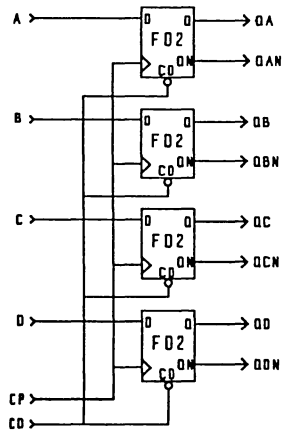

LOGIC DIAGRAM

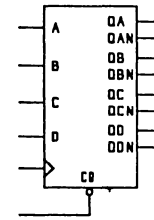

R81 8 BIT DATA REGISTER R81

NETWORK SCHEMATIC

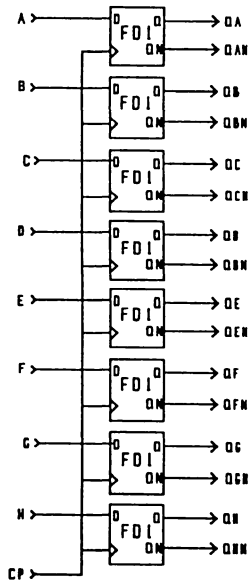

LOGIC DIAGRAM

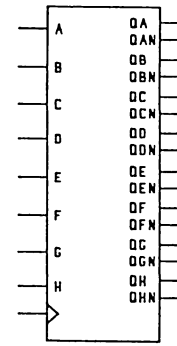

R82 — 8 BIT DATA REGISTER, CLEAR DIRECT — R82

NETWORK SCHEMATIC

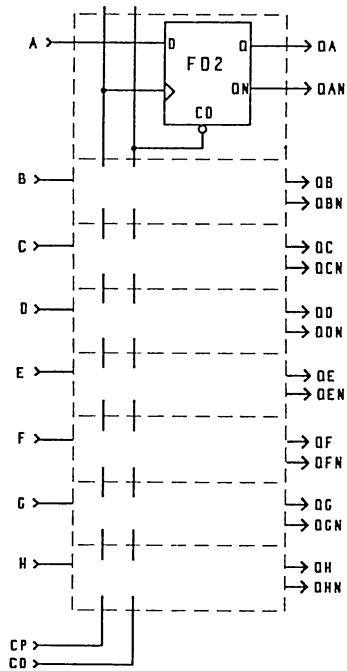

LOGIC DIAGRAM

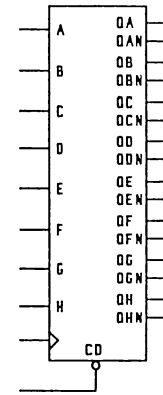

SR41 — 4 BIT SHIFT REGISTER — SR41

NETWORK SCHEMATIC

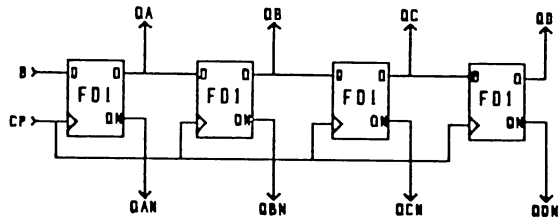

LOGIC DIAGRAM

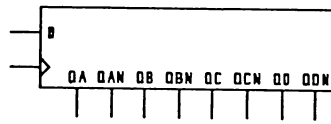

SR42 — 4 BIT SHIFT REGISTER, CLEAR DIRECT — SR42

NETWORK SCHEMATIC

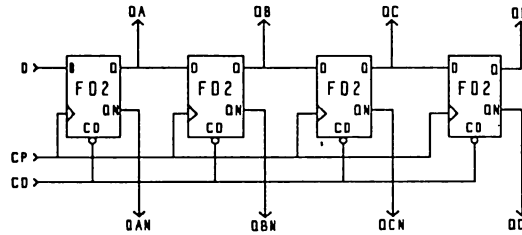

LOGIC DIAGRAM

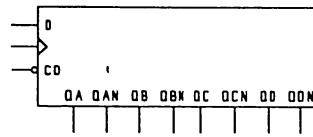

SR43 — 4 BIT SHIFT REGISTER, SET DIRECT — SR43

NETWORK SCHEMATIC

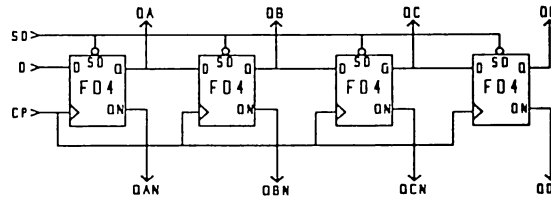

LOGIC DIAGRAM

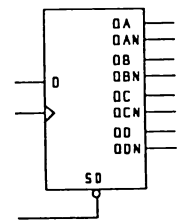

SR44 — 4 BIT SHIFT REGISTER, SYNCHRONOUS PARALLEL LOAD — SR44

NETWORK SCHEMATIC

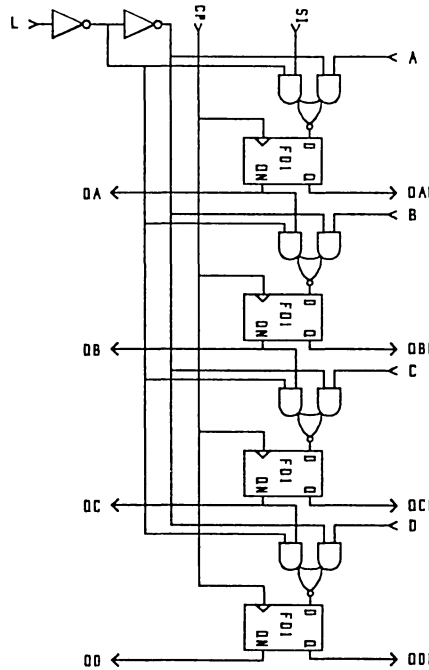

LOGIC DIAGRAM

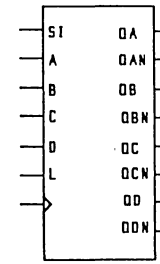

SR45 — 4 BIT SHIFT REGISTER, SYNCHRONOUS PARALLEL LOAD AND CLEAR — SR45

NETWORK SCHEMATIC

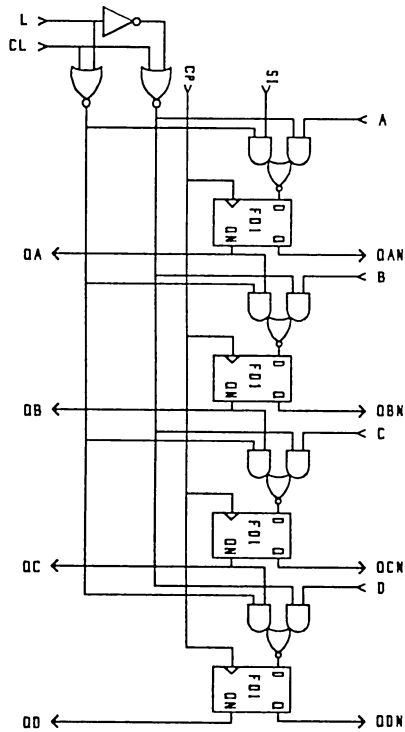

LOGIC DIAGRAM

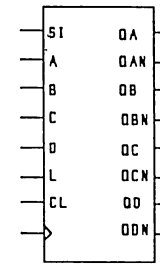

SR46 — 4 BIT SHIFT REGISTER, ASYNCHRONOUS PARALLEL LOAD — SR46

NETWORK SCHEMATIC

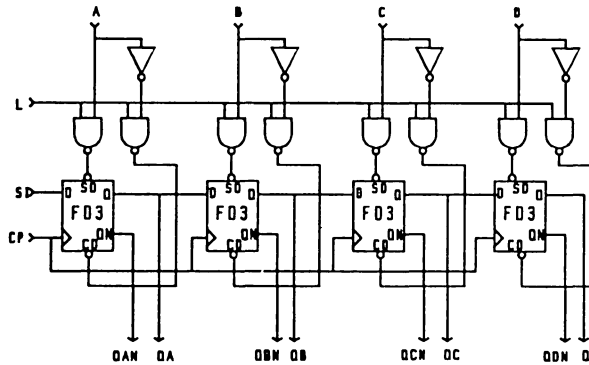

LOGIC DIAGRAM

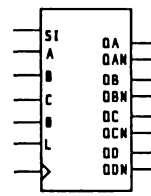

SR47 — 4 BIT SHIFT REGISTER, SYNC CLEAR — SR47

NETWORK SCHEMATIC

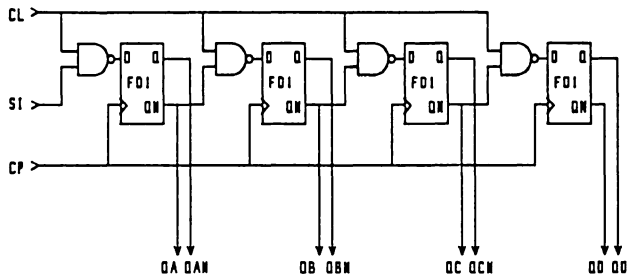

LOGIC DIAGRAM

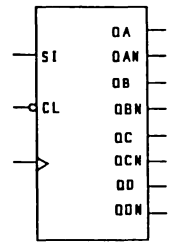

SYNC01	SYNCHRONIZER FOR ASYNCHRONOUS 0 TO 1 EVENT	SYNC01

NETWORK SCHEMATIC

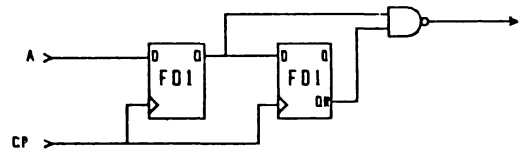

LOGIC DIAGRAM

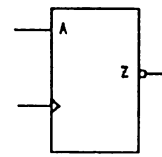

SYNC10	SYNCHRONIZER FOR ASYNCHRONOUS 1 TO 0 EVENT	SYNC10

NETWORK SCHEMATIC

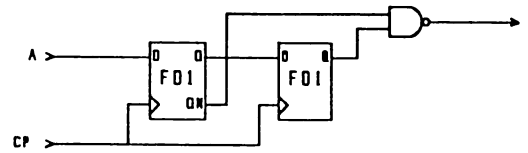

LOGIC DIAGRAM

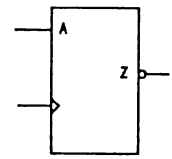

APPENDIX

MACROFUNCTIONS CALLING SEQUENCE

NAME	CALLING SEQUENCE
C2G	(QA, QAN, QB, QBN; CP, CD)
C3G	(QA, QAN, QB, QBN, QC, QCN; CP, CD)
C3LSR	(QA, QAN, QB, QBN, QC, QCN; CP, CD)
C4G	(QA, QB, QC, QD; CP, CD)
C4LSR	(QA, QAN, QB, QBN, QC, QCN, QD, QDN; CP, CD)
C5G	(QA, QB, QC, QD, QE; CP, CD)
C5LSR	(QA, QAN, QB, QBN, QC, QCN, QD, QDN, QE, QEN; CP, CD)
C6G	(QA, QB, QC, QD, QE, QF; CP, CD)
C6LSR	(QA, QAN, QB, QBN, QC, QCN, QD, QDN, QE, QEN, QF, QFN; CP, CD)
C7G	(QA, QB, QC, QD, QE, QF, QG; CP, CD)
C7LSR	(QA, QAN, QB, QBN, QC, QCN, QD, QDN, QE, QEN, QF, QFN, QG, QGN; CP, CD)
C8G	(QA, QB, QC, QD, QE, QF, QG, QH; CP, CD)
C8LSR	(QA, QAN, QB, QBN, QC, QCN, QD, QDN, QE, QEN, QF, QFN, QG, QGN, QH, QHN; CP, CD)
C9LSR	(QA, QAN, QB, QBN, QC, QCN, QD, QDN, QE, QEN, QF, QFN, QG, QGN, QH, QHN, QI, QIN; CP, CD)
C10LSR	(QA, QAN, QB, QBN, QC, QCN, QD, QDN, QE, QEN, QF, QFN, QG, QGN, QH, QHN, QI, QIN, QJ, QJN; CP, CD)
C11LSR	(QA, QAN, QB, QBN, QC, QCN, QD, QDN, QE, QEN, QF, QFN, QG, QGN, QH, QHN, QI, QIN, QJ, QJN, QK, QKN; CP, CD)
C12LSR	(QA, QAN, QB, QBN, QC, QCN, QD, QDN, QE, QEN, QF, QFN, QG, QGN, QH, QHN, QI, QIN, QJ, QJN, QK, QKN, QL, QLN; CP, CD)
C13LSR	(QA, QAN, QB, QBN, QC, QCN, QD, QDN, QE, QEN, QF, QFN, QG, QGN, QH, QHN, QI, QIN, QJ, QJN, QK, QKN, QL, QLN, QM, QMN; CP, CD)
C14LSR	(QA, QAN, QB, QBN, QC, QCN, QD, QDN, QE, QEN, QF, QFN, QG, QGN, QH, QHN, QI, QIN, QJ, QJN, QK, QKN, QL, QLN, QM, QMN, QN, QNN; CP, CD)
C15LSR	(QA, QAN, QB, QBN, QC, QCN, QD, QDN, QE, QEN, QF, QFN, QG, QGN, QH, QHN, QI, QIN, QJ, QJN, QK, QKN, QL, QLN, QM, QMN, QN, QNN, QO, QON; CP, CD)
C16LSR	(QA, QN, QB, QBN, QC, QCN, QD, QDN, QE, QEN, QF, QFN, QG, QGN, QH, QHN, QI, QIN, QJ, QJN, QK, QKN, QL, QLN, QM, QMN, QN, QNN, QO, QON, QP, QPN; CP, CD)
C17LSR	(QA, QAN, QB, QBN, QC, QCN, QD, QDN, QE, QEN, QF, QFN, QG, QGN, QH, QHN, QI, QIN, QJ, QJN, QK, QKN, QL, QLN, QM, QMN, QN, QNN, QO, QON, QP, QPN, QQ, QQN; CP, CD)
C18LSR	(QA, QAN, QB, QBN, QC, QCN, QD, QDN, QE, QEN, QF, QFN, QG, QGN, QH, QHN, QI, QIN, QJ, QJN, QK, QKN, QL, QLN, QM, QMN, QN, QNN, QO, QON, QP, QPN, QQ, QQN, QR, QRN; CP, CD)
C19LSR	(QA, QAN, QB, QBN, QC, QCN, QD, QDN, QE, QEN, QF, QFN, QG, QGN, QH, QHN, QI, QIN, QJ, QJN, QK, QKN, QL, QLN, QM, QMN, QN, QNN, QO, QON, QP, QPN, QQ, QQN, QR, QRN, QS, QSN; CP, CD)
C20LSR	(QA, QAN, QB, QBN, QC, QCN, QD, QDN, QE, QEN, QF, QFN, QG, QGN, QH, QHN, QI, QIN, QJ, QJN, QK, QKN, QL, QLN, QM, QMN, QN, QNN, QO, QON, QP, QPN, QQ, QQN, QR, QRN, QS, QSN, QT, QTN; CP, CD)

MACROFUNCTIONS CALLING SEQUENCE

NAME	CALLING SEQUENCE
CB4C	(AQN, BQN, CQN, DQN; CL, CP)
CB4F	(AQN, BQN, CQN, DQN; CP, ACD, BCD, CCD, DCD, ASD, BSD, CSD, DSD)
CB5C	(AQN, BQN, CQN, DQN, EQN; CL, CP)
CB5F	(AQN, BQN, CQN, DQN, EQN; CP, ACD, BCD, CCD, DCD, ECD, ASD, BSD, CSD, DSD, ESD)
CB6C	(AQN, BQN, CQN, DQN, EQN, FQN; CL, CP)
CB6F	(AQN, BQN, CQN, DQN, EQN, FQN; CP, ACD, BCD, CCD, DCD, ECD, FCD, ASD, BSD, CSD, DSD, ESD, FSD)
CB7C	(AQN, BQN, CQN, DQN, EQN, FQN, GQN; CL, CP)
CB7F	(AQN, BQN, CQN, DQN, EQN, FQN, GQN; CP, ACD, BCD, CCD, DCD, ECD, FCD, GCD, ASD, BSD, CSD, DSD, ESD, FSD, GSD)
CB8C	(AQN, BQN, CQN, DQN, EQN, FQN, GQN, HQN; CL, CP)
CB8F	(AQN, BQN, CQN, DQN, EQN, FQN, GQN, HQN; CP, ACD, BCD, CCD, DCD, ECD, FCD, GCD, HCD, ASD, BSD, CSD, DSD, ESD, FSD, GSD, HSD)
CB9C	(AQN, BQN, CQN, DQN, EQN, FQN, GQN, HQN, IQN; CL, CP)
CB9F	(AQN, BQN, CQN, DQN, EQN, FQN, GQN, HQN, IQN; CP, ACD, BCD, CCD, DCD, ECD, FCD, GCD, HCD, ICD, ASD, BSD, CSD, DSD, ESD, FSD, GSD, HSD, ISD)
CB10C	(AQN, BQN, CQN, DQN, EQN, FQN, GQN, HQN, IQN, JQN; CL, CP)
CB10F	(AQN, BQN, CQN, DQN, EQN, FQN, GQN, HQN, IQN, JQN; CP, ACD, BCD, CCD, DCD, ECD, FCD, GCD, HCD, ICD, JCD, ASD, BSD, CSD, DSD, ESD, FSD, GSD, HSD, ISD, JSD)
CB41	(QA, QB, QC, QD, CO; CP, CI, CD)
CB42	(QA, QB, QC, QD, CO; CP, CI, CL, CD)
CLA1	(C4, G0, G1; C0, A0, B0, A1, B1, A2, A3, B3)
CLA2	(G0, G1, C4; C0, A0, B0, A1, B1, A2, B2, A3, B3)
CM3B	(QA, QAN, QB, QBN; CP, CD)
CM4B	(QA, QAN, QB, QBN; CP, CD)
CM4J	(QA, QAN, QB, QBN; CP, CD)
CM5B	(QA, QAN, QB, QBN, QC, QCN; CP, CD)
CM5SR	(QA, QAN, QB, QBN, QC, QCN; CP, CD)
CM6B	(QA, QAN, QB, QBN, QC, QCN; CP, CD)
CM6J	(QA, QAN, QB, QBN, QC, QCN; CP, CD)
CM7B	(QA, QAN, QB, QBN, QC, QCN; CP, CD)
CM8B	(QA, QAN, QB, QBN, QC, QCN; CP, CD)
CM8BR	(QA, QB, QC; CP, CD)
CM8J	(QA, QAN, QB, QBN, QC, QCN, QD, QDN; CP, CD)
CM8SR	(QA, QAN, QB, QBN, QC, QCN; CP, CD)
CM9B	(QA, QAN, QB, QBN, QC, QCN, QD, QDN; CP, CD)
CM9BR	(QA, QB, QC, QD; CP, CD)
CM9SR	(QA, QAN, QB, QBN, QC, QCN, QD, QDN; CP, CD)
CM10B	(QA, QAN, QB, QBN, QC, QCN, QD, QDN; CP, CD)
CM10BR	(QA, QB, QC, QD; CP, CD)
CM10J	(QA, QAN, QB, QBN, QC, QCN, QD, QDN, QE, QEN; CP, CD)
CM10SR	(QA, QAN, QB, QBN, QC, QCN, QD, QDN; CP, CD)
CM11B	(QA, QAN, QB, QBN, QC, QCN, QD, QDN; CP, CD)
CM11BR	(QA, QB, QC, QD; CP, CD)
CM12B	(QA, QAN, QB, QBN, QC, QCN, QD, QDN; CP, CD)
CM12BR	(QA, QB, QC, QD; CP, CD)
CM12J	(QA, QAN, QB, QBN, QC, QCN, QD, QDN, QE, QEN, QF, QFN; CP, CD)

MACROFUNCTIONS CALLING SEQUENCE

NAME	CALLING SEQUENCE
CM12SR	(QA, QAN, QB, QBN, QC, QCN, QD, QDN; CP, CD)
CM13B	(QA, QAN, QB, QBN, QC, QCN, QD, QDN; CP, CD)
CM13BR	(QA, QB, QC, QD; CP, CD)
CM14B	(QA, QAN, QB, QBN, QC, QCN, QD, QDN; CP, CD)
CM14BR	(QA, QB, QC, QD; CP, CD)
CM14J	(QA, QAN, QB, QBN, QC, QCN, QD, QDN, QE, QEN, QF, QFN, QG, QGN; CP, CD)
CM15B	(QA, QAN, QB, QBN, QC, QCN, QD, QDN; CP, CD)
CM15BR	(QA, QB, QC, QD; CP, CD)
CM16B	(QA, QAN, QB, QBN, QC, QCN, QD, QDN; CP, CD)
CM16BR	(QA, QB, QC, QD; CP, CD)
CM16J	(QA, QAN, QB, QBN, QC, QCN, QD, QDN, QE, QEN, QF, QFN, QG, QGN, QH, QHN; CP, CD)
CM17B	(QA, QAN, QB, QBN, QC, QCN, QD, QDN, QE, QEN; CP, CD)
CM17BR	(QA, QB, QC, QD, QE; CP, CD)
CM18BR	(QA, QB, QC, QD, QE; CP, CD)
CM19BR	(QA, QB, QC, QD, QE; CP, CD)
CM20BR	(QA, QB, QC, QD, QE; CP, CD)
CM21BR	(QA, QB, QC, QD, QE; CP, CD)
CM22BR	(QA, QB, QC, QD, QE; CP, CD)
CM23BR	(QA, QB, QC, QD, QE; CP, CD)
CM24BR	(QA, QB, QC, QD, QE; CP, CD)
CM25BR	(QA, QB, QC, QD, QE; CP, CD)
CM26BR	(QA, QB, QC, QD, QE; CP, CD)
CM27BR	(QA, QB, QC, QD, QE; CP, CD)
CM28BR	(QA, QB, QC, QD, QE; CP, CD)
CM29BR	(QA, QB, QC, QD, QE; CP, CD)
CM30BR	(QA, QB, QC, QD, QE; CP, CD)
CM31BR	(QA, QB, QC, QD, QE; CP, CD)
CM32BR	(QA, QB, QC, QD, QE; CP, CD)
CMP4	(AEB; A0, B0, A1, B1, A2, B2, A3, B3)
CMP8	(AEB; A0, B0, A1, B1, A2, B2, A3, B3, A4, B4, A5, B5, A6, B6, A7, B7)
CUD41	(QA, QB, QC, QD, CQN; CP, PN, TN, UP, CD)
CUD42	(QA, QB, QC, QD, CQN; A, B, C, D, L, CL, CP, PN, TN, UP)
D24GH	(Z0, Z1, Z2, Z3; A, B, GN)
D24GL	(Z0, Z1, Z2, Z3; A, B, G)
D24H	(Z0, Z1, Z2, Z3; A, B)
D24L	(Z0, Z1, Z2, Z3; A, B)
D38GH	(Z0, Z1, Z2, Z3, Z4, Z5, Z6, Z7; A, B, C, GN)
D38GL	(Z0, Z1, Z2, Z3, Z4, Z5, Z6, Z7; A, B, C, G)
D38H	(Z0, Z1, Z2, Z3, Z4, Z5, Z6, Z7; A, B, C)
D38L	(Z0, Z1, Z2, Z3, Z4, Z5, Z6, Z7; A, B, C)
D410H	(Z0, Z1, Z2, Z3, Z4, Z5, Z6, Z7, Z8, Z9; A, B, C, D)
D410L	(Z0, Z1, Z2, Z3, Z4, Z5, Z6, Z7, Z8, Z9; A, B, C, D)
DM6JH	(J0, J1, J2, J3, J4, J5; A, AN, B, BN, C, CN)
DM6JL	(J0, J1, J2, J3, J4, J5; A, AN, B, BN, C, CN)
DM8JH	(J0, J1, J2, J3, J4, J5, J6, J7; A, AN, B, BN, C, CN, D, DN)
DM8JL	(J0, J1, J2, J3, J4, J5, J6, J7; A, AN, B, BN, C, CN, D, DN)
DM10JH	(J0, J1, J2, J3, J4, J5, J6, J7, J8, J9; A, AN, B, BN, C, CN, D, DN, E, EN)
DM10JL	(J0, J1, J2, J3, J4, J5, J6, J7, J8, J9; A, AN, B, BN, C, CN, D, DN, E, EN)
DM12JH	(J0, J1, J2, J3, J4, J5, J6, J7, J8, J9, J10, J11; A, AN, B, BN, C, CN, D, DN, E, EN, F, FN)

MACROFUNCTIONS CALLING SEQUENCE

NAME	CALLING SEQUENCE
DM12JL	(J0, J1, J2, J3, J4, J5, J6, J7, J8, J9, J10, J11; A, AN, B, BN, C, CN, D, DN, E, EN, F, FN)
DM14JH	(J0, J1, J2, J3, J4, J5, J6, J7, J8, J9, J10, J11, J12, J13; A, AN, B, BN, C, CN, D, DN, E, EN, F, FN, G, GN)
DM14JL	(J0, J1, J2, J3, J4, J5, J6, J7, J8, J9, J10, J11, J12, J13; A, AN, B, BN, C, CN, D, DN, E, EN, F, FN, G, GN)
DM16JH	(J0, J1, J2, J3, J4, J5, J6, J7, J8, J9, 10, J11, J12, J13, J14, J15; A, AN, B, BN, C, CN, D, DN, E, EN, F, FN, G, GN, H, HN)
DM16JL	(J0, J1, J2, J3, J4, J5, J6, J7, J8, J9, J10, J11, J12, J13, J14, J15; A, AN, B, BN, C, CN, D, DN, E, EN, F, FN, G, GN, H, HN)
FA1	(S, CO; CI, A, B)
FA2	(S0, S1, C2; C0, A0, B0, A1, B1)
FA4	(S0, S1, S2, S3, C4, P3; C0, A0, B0, G0, A1, B1, G1, A2, B2, A3, B3)
FA16	(S0, S1, S2, S3, S4, S5, S6, S7, S8, S9, S10, S11, S12, S13, S14, S15, C16; C0, A0, B0, A1, B1, A2, B2, A3, B3, A4, B4, A5, B5, A6, B6, A7, B7, A8, B8, A9, B9, A10, B10, A11, B11, A12, B12, A13, B13, A14, B14, A15, B15)
FAS2	(S0, S1, C2; C0, A0, B0, A1, B1, SUB)
HA1	(S, CO; A, B)
L4	(QA, QAN, QB, QBN, QC, QCN, QD, QDN; A, B, C, D, L)
L8	(QA, QAN, QB, QBN, QC, QCN, QD, QDN, QE, QEN, QF, QFN, QG, QGN, QH, QHN; A, B, C, D, E, F, G, H, L)
M42C	(Z0, Z1, Z2, Z3, Z4, Z5, Z6, Z7, Z8, Z9; A, B, C, D)
M82C	(S0, S1, C2; C0, A0, B0, A1, B1)
M85C	(AGB, AEB, ALB; AGBI, AEBI, ALBI, A3, B3, A2, B2, A1, B1, A0 B0)
M138C	(Z0, Z1, Z2, Z3, Z4, Z5, Z6, Z7; G1, G2A, G2B, A, B, C)
M138D	(Z0, Z1, Z2, Z3, Z4, Z5, Z6, Z7; G1, G2A, G2B, A, B, C)
M150C	(Z; D0, D1, D2, D3, D4, D5, D6, D7, D8, D9, D10, D11, D12, D13, D14, D15, A, B, C, D, SN)
M151C	(W, Y; D0, D1, D2, D3, D4, D5, D6, D7, A, B, C, SN)
M152C	(Z; D0, D1, D2, D3, D4, D5, D6, D7, A, B, C)
M153C	(1Z, 2Z; 1D0, 1D1, 1D2, 1D3, 2D0, 1D1, 2D2, 2D3, A, B, 1GN, 2GN)
M157C	(Z1, Z2, Z3, Z4; A1, B1, A2, B2, A3, B3, A4, B4, S, GN)
M158C	(Z1, Z2, Z3, Z4; A1, B1, A2, B2, A3, B3, A4, B4, S, GN)
M160C	(QA, QB, QC, QD, CO, QAN, QBN, QCN, QDN; A, B, C, D, L, CP, CD, P, T)
M160D	(QA, QB, QC, QD, CO; A, B, C, D, L, CP, CD, P, T)
M161C	(QA, QB, QC, QD, CO, QAN, QBN, QCN, QDN; A, B, C, D, L, CP, P, T, CD)
M161D	(QA, QB, QC, QD, CO; A, B, C, D, L, CP, P, T, CD)
M162C	(QA, QB, QC, QD, CO, QAN, QBN, QCN, QDN; A, B, C, D, L, CL, CP, P, T)
M162D	(QA, QB, QC, QD, CO; A, B, C, D, L, CL, CP, P, T)
M163C	(QA, QB, QC, QD, CO, QAN, QBN, QCN, QDN; A, B, C, D, L, CL, CP, P, T)
M163D	(QA, QB, QC, QD, CO; A, B, C, D, L, CL, CP, P, T)
M163F	(QA, QB, QC, QD, CO; A, B, C, D, L, CL, CP, P, T)
M169C	(QA, QB, QC, QD, CON; A, B, C, D, L, CP, PN, TN, UP)
M244C	(1Y1, 1Y2, 1Y3, 1Y4, 2Y1, 2Y2, 2Y3, 2Y4; 1A1, 1A2, 1A3, 1A4, 2A1, 2A2, 2A3, 2A4, 1GN, 2GN)
MAG2	(AGB, AEB, ALB; AGBI, AEBI, ALBI, A1, B1, A0, B0)
MAG2H	(AGB, AEB, ALB; A1, B1, A0, B0)

MACROFUNCTIONS CALLING SEQUENCE

NAME	CALLING SEQUENCE
MAG4	(AGB, AEB, ALB; AGBI, AEBI, ALBI, A3, B3, A2, B2, A1, B1, A0, B0)
MR41	(QA, QAN, QB, QBN, QC, QCN, QD, QDN; D0A, D1A, D0B, D1B, D0C, D1C, D0D, D1D, S, CP)
MR42	(QA, QAN, QB, QBN, QC, QCN, QD, QDN; D0A, D1A, D0B, D1B, D0C, D1C, D0D, D1D, S, CP, CD)
MR43	(QA, QAN, QB, QBN, QC, QCN, QD, QDN; D0A, D1A, D0B, D1B, D0C, D1C, D0D, D1D, S, CLR, CP)
MR44	(QA, QAN, QB, QBN, QC, QCN, QD, QDN; D0A, D1A, D0B, D1B, D0C, D1C, D0D, D1D, S, CLR, CP, CD)
MR81	(QA, QAN, QB, QBN, QC, QCN, QD, QDN, QE, QEN, QF, QFN, QG, QGN, QH, QHN; D0A, D1A, D0B, D1B, D0C, D1C, D0D, D1D, D0E, D1E, D0F, D1F, D0G, D1G, D0H, D1H, S, CP)
MR82	(QA, QAN, QB, QBN, QC, QCN, QD, QDN, QE, QEN, QF, QFN, QG, QGN, QH, QHN; D0A, D1A, D0B, D1B, D0C, D1C, D0D, D1D, D0E, D1E, D0F, D1F, D0G, D1G, D0H, D1H, S, CP, CD)
MUX22H	(Z0, Z1; D00, D10, D01, D11, A)
MUX24H	(Z0, Z1, Z2, Z3; D00, D10, D01, D11, D02, D12, D03, D13, A)
MUX24L	(Z0, Z1, Z2, Z3; D00, D10, D01, D11, D02, D12, D03, D13, A)
MUX31H	(Z; D0, D1, D2, A, B)
MUX31L	(Z; D0, D1, D2, A, B)
MUX32	(Z0, Z1; D00, D10, D20, D01, D11, D21, A, B)
MUX34H	(Z0, Z1, Z2, Z3; D00, D10, D20, D01, D11, D21, D02, D12, D22, D03, D13, D23, A, B)
MUX41GH	(Z; D0, D1, D2, D3, A, B, G)
MUX41H	(Z; D0, D1, D2, D3, A, B)
MUX42H	(Z0, Z1; D00, D10, D20, D30, D01, D11, D21, D31, A, B)
MUX44H	(Z0, Z1, Z2, Z3; D00, D10, D20, D30, D01, D11, D21, D31, D02, D12, D22, D32, D03, D13, D23, D33, A, B)
MUX51H	(Z; D0, D1, D2, D3, D4, A, B, C)
MUX51L	(Z; D0, D1, D2, D3, D4, A, B, C)
MUX52H	(Z0, Z1; D00, D10, D20, D30, D40, D01, D11, D21, D31, D41, A, B, C)
MUX54H	(Z0, Z1, Z2, Z3; D00, D10, D20, D30, D40, D01, D11, D21, D31, D41, D02, D12, D22, D32, D42, D03, D13, D23, D33, D43, A, B, C)
MUX61H	(Z; D0, D1, D2, D3, D4, D5, A, B, C)
MUX61L	(Z; D0, D1, D2, D3, D4, D5, A, B, C)
MUX62H	(Z0, Z1; D00, D10, D20, D30, D40, D50, D01, D11, D21, D31, D41, D51, A, B, C)
MUX64H	(Z0, Z1, Z2, Z3; D00, D10, D20, D30, D40, D50, D01, D11, D21, D31, D41, D51, D02, D12, D22, D32, D42, D52, D03, D13, D23, D33, D43, D52, A, B, C)
MUX71H	(Z; D0, D1, D2, D3, D4, D5, D6, A, B, C)
MUX71L	(Z; D0, D1, D2, D3, D4, D5, D6, A, B, C)
MUX72H	(Z0, Z1; D00, D10, D20, D30, D40, D50, D60, D01, D11, D21, D31, D41, D51, D61, A, B, C)
MUX74H	(Z0, Z1, Z2, Z3; D00, D10, D20, D30, D40, D50, D60, D01, D11, D21, D31, D41, D51, D61, D02, D12, D22, D32, D42, D52, D62, D03, D13, D23, D33, D43, D53, D63, A, B, C)
MUX82H	(Z0, Z1; D00, D10, D20, D30, D40, D50, D60, D70, D01, D11, D21, D31, D41, D51, D61, D71, A, B, C)
MUX84H	(Z0, Z1, Z2, Z3; D00, D10, D20, D30, D40, D50, D60, D70, D01, D11, D21, D31, D41, D51, D61, D71, D02, D12, D22, D32, D42, D52, D62, D72, D03, D13, D23, D33, D43, D53, D63, D73, A, B, C)

MACROFUNCTIONS CALLING SEQUENCE

NAME	CALLING SEQUENCE
PAR8	(Z; A, B, C, D, E, F, G, H)
PAR9	(Z; A, B, C, D, E, F, G, H, I)
PS2	(Z; CP, CD)
PS3	(Z; CP, CD)
PS4	(Z; CP, CD)
R41	(QA, QAN, QB, QBN, QC, QCN, QD, QDN; A, B, C, D, CP)
R42	(QA, QAN, QB, QBN, QC, QCN, QD, QDN; A, B, C, D, CP, CD)
R81	(QA, QAN, QB, QBN, QC, QCN, QD, QDN, QE, QEN, QF, QFN, QG, QGN, QH, QHN; A, B, C, D, E, F, G, H, CP)
R82	(QA, QAN, QB, QBN, QC, QCN, QD, QDN, QE, QEN, QF, QFN, QG, QGN, QH, QHN; A, B, C, D, E, F, G, H, CP, CD)
SR41	(QA, QAN, QB, QBN, QC, QCN, QD, QDN; D, CP)
SR42	(QA, QAN, QB, QBN, QC, QCN, QD, QDN; D, CP, CD)
SR43	(QA, QAN, QB, QBN, QC, QCN, QD, QDN; D, CP, SD)
SR44	(QA, QAN, QB, QBN, QC, QCN, QD, QDN; SI, A, B, C, D, L, CP)
SR45	(QA, QAN, QB, QBN, QC, QCN, QD, QDN; SI, A, B, C, D, L, CL, CP)
SR46	(QA, QAN, QB, QBN, QC, QCN, QD, QDN; SI, A, B, C, D, L, CP)
SR47	(QA, QAN, QB, QBN, QC, QCN, QD, QDN; SI, CL, CP)
SYNC01	(Z; A, CP)
SYNC10	(Z; A, CP)

GATE COUNT FOR MACROFUNCTIONS IN EACH FAMILY

Name	CB12000	ISB12000	ISB9000
C2G	12	16	15
C3G	25	30	32
C3LSR	20	26	27
C4G	48	57	69
C4LSR	26	33	35
C5G	60	70	74
C5LSR	33	42	41
C6G	72	84	100
C6LSR	38	50	50
C7G	85	98	119
C7LSR	44	58	57
C8G	98	113	137
C8LSR	56	70	71
C9LSR	57	74	71
C10LSR	63	82	86
C11LSR	69	90	100
C12LSR	81	103	100
C13LSR	87	111	107
C14LSR	93	119	114
C15LSR	93	122	116
C16LSR	105	135	129
C17LSR	105	138	131
C18LSR	111	146	138
C19LSR	123	159	152
C20LSR	123	162	153
CB4C	46	47	60
CB4F	49	58	60
CB5C	59	61	78
CB5F	63	74	78
CB6C	74	76	96
CB6F	79	93	96
CB7C	89	92	116
CB7F	95	111	116
CB8C	104	107	135
CB8F	111	130	135
CB9C	119	123	154
CB9F	127	148	154
CB10C	134	138	174
CB10F	143	166	174
CB41	52	54	66
CB42	58	58	72
CLA1	23	24	33
CLA2	20	21	30
CM3B	13	17	16

Name	CB12000	ISB12000	ISB9000
CM4B	14	18	20
CM4J	12	16	15
CM5B	25	30	42
CM5SR	19	25	24
CM6B	25	30	36
CM6J	18	24	23
CM7B	28	33	42
CM8B	23	28	33
CM8BR	18	24	23
CM8J	24	32	30
CM8SR	21	28	27
CM9B	36	42	43
CM9BR	30	38	38
CM9SR	28	36	35
CM10B	35	42	50
CM10BR	31	39	39
CM10J	30	40	38
CM10SR	30	38	40
CM11B	38	45	53
CM11BR	31	39	39
CM12B	34	41	48
CM12BR	32	40	39
CM12J	36	48	45
CM12SR	29	36	38
CM13B	38	44	56
CM13BR	31	39	39
CM14B	38	45	54
CM14BR	32	40	39
CM14J	42	56	53
CM15B	40	46	57
CM15BR	32	40	39
CM16B	34	41	48
CM16BR	24	32	30
CM16J	48	64	60
CM17B	47	55	69
CM17BR	36	46	45
CM18BR	37	47	46
CM19BR	37	47	46
CM20BR	38	48	46
CM21BR	37	47	46
CM22BR	38	48	46
CM23BR	38	48	46
CM24BR	38	48	48
CM25BR	37	47	46

GATE COUNT FOR MACROFUNCTIONS IN EACH FAMILY

Name	CB12000	ISB12000	ISB9000
CM26BR	38	48	46
CM27BR	38	48	46
CM28BR	38	48	48
CM29BR	38	48	46
CM30BR	38	48	48
CM31BR	38	48	48
CM32BR	30	40	38
CMP4	10	12	15
CMP8	29	24	31
CUD41	61	62	78
CUD42	75	88	99
D24GH	10	9	9
D24GL	10	9	9
D24H	6	7	9
D24L	6	7	9
D38GH	19	20	30
D38GL	19	20	30
D38H	19	16	16
D38L	19	16	16
D410H	24	25	36
D410L	24	25	36
DM6JH	6	7	9
DM6JL	6	7	9
DM8JH	8	10	9
DM8JL	8	10	12
DM10JH	10	12	15
DM10JL	10	12	15
DM12JH	12	14	18
DM12JL	12	14	18
DM14JH	14	17	21
DM14JL	14	17	21
DM16JH	16	19	24
DM16JL	16	19	24
FA1	8	8	11
FA2	17	17	21
FA4	37	42	53
FA16	222	246	317
FAS2	22	20	25
HA1	4	5	6
L4	16	16	18
L8	32	32	36
M42C	27	25	27
M82C	17	17	21
M85C	44	46	66

Name	CB12000	ISB12000	ISB9000
M138C	23	21	23
M138D	24	25	35
M150C	36	37	54
M151C	19	20	30
M152C	17	18	25
M153C	16	16	24
M157C	13	14	20
M158C	11	12	16
M160C	64	65	83
M160D	69	71	90
M161C	58	58	75
M161D	64	65	84
M162C	59	57	75
M162D	67	65	84
M163C	58	56	75
M163D	65	64	84
M163F	103	110	119
M169C	68	65	86
M244C	18	18	39
MAG2	22	23	33
MAG2H	17	17	25
MAG4	44	46	66
MR41	33	32	44
MR42	37	38	50
MR43	35	34	47
MR44	39	40	53
MR81	65	62	86
MR82	73	75	98
MUX22H	7	8	11
MUX24H	13	14	20
MUX24L	9	9	14
MUX31H	7	8	11
MUX31L	5	5	9
MUX32H	12	13	18
MUX34H	22	23	33
MUX41GH	8	8	14
MUX41H	8	8	12
MUX42H	14	14	21
MUX44H	26	26	39
MUX51H	12	12	18
MUX51L	11	12	17
MUX52H	21	21	32
MUX54H	39	39	59
MUX61H	13	13	20

GATE COUNT FOR MACROFUNCTIONS IN EACH FAMILY

Name	CB12000	ISB12000	ISB9000
MUX61L	14	15	21
MUX62H	23	23	35
MUX64H	43	42	65
MUX71H	16	16	24
MUX71L	16	17	24
MUX72H	29	28	44
MUX74H	55	53	83
MUX82H	31	30	46
MUX84H	59	56	89
PAR8	14	17	21
PAR9	16	19	24
PS2	14	16	18
PS3	21	24	27
PS4	27	32	35

Name	CB12000	ISB12000	ISB9000
R41	24	22	30
R42	24	32	30
R81	48	45	60
R82	48	64	60
SR41	24	22	30
SR42	24	32	30
SR43	28	29	36
SR44	34	33	45
SR45	35	34	46
SR46	40	53	48
SR47	28	27	36
SYNC01	13	12	17
SYNC10	13	12	17

Notes

A standard 2-input NAND gate (ND2) is taken as a one gate equivalent.
CB12000 gate count is taken directly from area calculation.
ISB12000 gate count is calculated by dividing total cells by a factor of 2.5. Each unit cell is made of 1 P-N transistor pair.
ISB9000 gate count is calculated by multiplying total sites by a factor of 1.5. Each site is made of 3 P-N transistor pairs.
ISB18000 gate count is identical to ISB12000 for the listed macrofunctions.

EQUIVALENT GATES FOR 7400 SERIES TTL DEVICES

Device	Equiv. Gates
7400	4
7401	4
7402	4
7403	4
7404	6
7405	6
7406	6
7407	6
7408	8
7409	8
7410	6
7411	9
7412	6
7413	14
7414	24
7415	9
7416	6
7417	6
7418	28
7419	18
7420	4
7421	6
7422	4
7423	26
7424	28
7425	6
7426	4
7427	6
7428	4
7430	6
7432	8
7433	4
7437	4
7438	4
7440	4
7442	22
7443	29
7444	29
7445	29
7446	45
7447	45
7448	45
7449	45
7450	6
7451	7

Device	Equiv. Gates
7452	8
7453	7
7454	8
7455	6
7460	6
7461	6
7462	9
7464	8
7465	8
7470	16
7471	15
7472	14
7473	20
7474	16
7475	12
7476	20
7477	12
7478	20
7480	16
7481	80
7482	20
7483	57
7484	80
7485	44
7486	12
7487	20
7489	320
7490	40
7491	42
7492	40
7493	40
7494	36
7495	34
7496	45
7497	94
7498	32
7499	48
74100	18
74101	19
74102	14
74103	20
74106	20
74107	20
74108	20
74109	21

Device	Equiv. Gates
74110	14
74111	20
74112	20
74113	18
74114	20
74116	36
74120	30
74125	12
74126	8
74132	20
74133	12
74134	12
74135	24
74136	12
74137	29
74138	23
74139	20
74141	16
74142	90
74143	95
74144	95
74145	24
74147	39
74148	42
74150	38
74151	20
74152	18
74153	14
74154	40
74155	22
74156	22
74157	13
74158	11
74159	36
74160	50
74161	60
74162	62
74163	61
74164	52
74165	76
74166	64
74167	52
74168	76
74169	65
74170	116

EQUIVALENT GATES FOR 7400 SERIES TTL DEVICES (Contd)

Device	Equiv. Gates
74172	205
74173	50
74174	37
74175	25
74176	48
74177	42
74178	56
74179	56
74180	26
74181	100
74182	30
74183	32
74184	100
74185	100
74190	82
74191	78
74192	64
74193	58
74194	52
74195	40
74196	42
74197	41
74198	92
74199	70
74225	450
74226	116
74240	24
74241	24
74242	26
74243	26
74244	24
74245	80
74246	52
74247	52
74248	52
74249	52
74251	32
74253	20
74257	23
74258	19
74259	48
74260	10
74261	70

Device	Equiv. Gates
74265	8
74266	12
74273	50
74274	70
74275	70
74276	45
74278	34
74279	10
74280	50
74281	170
74283	59
74284	58
74285	58
74289	360
74290	44
74293	40
74295	57
74298	32
74299	170
74322	127
74323	170
74347	45
74348	60
74351	42
74352	20
74353	20
74354	75
74355	75
74356	75
74357	75
74365	19
74366	19
74367	20
74368	20
74373	58
74374	66
74375	16
74376	40
74377	48
74378	36
74379	24
74381	150
74382	150

Device	Equiv. Gates
74384	290
74385	140
74386	12
74390	56
74393	48
74395	50
74398	28
74399	28
74412	74
74425	12
74426	12
74445	26
74447	45
74465	24
74466	24
74467	24
74468	24
74490	74
74522	28
74533	50
74534	66
74540	48
74541	41
74590	151
74591	151
74592	135
74393	135
74395	72
74596	72
74604	88
74605	88
74606	88
74607	88
74668	90
74669	77
74670	144
74671	118
74672	118
74688	81
74689	81
74690	116

Notes: 1. The equivalent gate values are on a per package basis, i.e., a 7400 package, quad 2-input gate, is 4 equivalent gates.
2. All 3-state outputs have been converted to on-chip 3 state buffers.
3. The circuits used for determining these numbers may or may not meet the required speed.

EQUIVALENT GATES FOR 4000 SERIES CMOS DEVICES

Device	Equiv. Gates	Device	Equiv. Gates	Device	Equiv. Gates
4000	5	4069	6	4374	68
4001	4	4070	12	4375	14
4002	4	4071	6	4386	12
4006	92	4072	6	4501	6
4007	2	4073	8	4503	20
4008	42	4074	14	4504	33
4009	6	4075	8	4505	271
4010	6	4076	41	4506	19
4011	4	4077	12	4507	12
4012	4	4078	6	4508	52
4013	14	4081	6	4510	94
4014	56	4082	6	4511	136
4015	52	4085	8	4512	24
4017	51	4086	10	4514	69
4018	51	4089	84	4515	69
4019	12	4093	24	4516	90
4020	76	4094	93	4518	76
4021	50	4095	14	4519	28
4022	40	4096	14	4520	64
4023	6	4101	32	4521	123
4024	48	4106	30	4522	44
4025	6	4107	18	4526	47
4026	71	4138	20	4527	56
4027	20	4139	10	4530	16
4028	28	4153	32	4531	36
4029	68	4155	22	4532	40
4030	12	4157	24	4534	190
4032	72	4158	24	4539	24
4034	124	4160	64	4543	66
4035	48	4161	64	4554	40
4038	75	4162	64	4555	22
4040	78	4163	64	4556	22
4041	4	4164	51	4558	65
4042	20	4166	84	4560	74
4043	28	4174	44	4572	6
4044	28	4175	32	4580	187
4048	42	4181	106	4581	100
4049	6	4182	28	4582	31
4050	6	4193	64	4583	23
4051	6	4194	66	4584	30
4060	78	4257	24	4585	46
4063	60	4273	50	4723	44
4068	7	4373	58	4724	54

Notes: 1. The equivalent gate values are on a per package basis, i.e., a 4001 package, quad 2-input gate, is 4 equivalent gates.
2. The circuits used for determining these numbers may or may not meet the required speed.

NOTES

DESIGN CENTERS

USA

Carrollton, TX 75006-5039
1310 Electronics Drive
MS 2337
Tel.: (1) 214/466-8844

Lincoln, MA 01773
55 Old Bedford Rd.
Tel · (1) 617/258-0300

San Jose, CA 95110
2055 Gateway Place
Suite 300
Tel.: (1) 408/452-8585

EUROPE

FRANCE
94253 Gentilly Cedex
7, avenue Gallieni - BP 93
Tel.: (33-1) 47407575

GERMANY
8011 Grasbrunn
Bretonischer Ring 4
Neukeferloh Technopark
Tel.: (49-89) 460060

ITALY
20041 Agrate Brianza
Centro Direzionale Colleoni
Palazzo Orione 1/2
Tel.: (39-39) 63791-31

40033 Casalecchio di Reno (BO)
Via R. Fucini, 12
Tel.: (39-51) 591914

SPAIN
28027 Madrid
Calle Albacete 5
Tel.: (34-1) 4051615

SWEDEN
S-16421 Kista
Borgarfjordsgatan, 13
Box 1094
Tel.: (46-8) 7939220

UNITED KINGDOM and EIRE
Marlow, Bucks SL71YL
Planar House, Parkway
Globe Park
Tel.: (44-628) 890800

ASIA/PACIFIC

HONG KONG
Wanchai
22nd Floor
Hopewell Centre
183 Queen's Road East
Tel.: (852-5) 8615788

KOREA
Seoul 121
8th floor Shinwon Building
823-14, Kuksman-Dong
Kang-Nam-Gu
Tel. (82-2) 553-0399

SINGAPORE
Singapore 2056
28 Ang Mo Kio
Industrial Park 2
Tel.: (65) 482-1411

TAIWAN
Taipei
12th Floor
571, Tun Hua South Road
Tel. (886-2) 755-4111

JAPAN

JAPAN
Tokyo 108
Nisseki - Takanawa
Bldg. 4F
2-18-10 Takanawa
Minato-Ku
Tel : (81-3) 3280-4121

SALES OFFICES

EUROPE

DENMARK
Herlev
Tel.: (45-2) 948533

FINLAND
Lohja SF-08150
Tel.: 12.155.11

FRANCE
Gentilly
Tel.. (33-1) 47407575

Strasbourg
Tel.: (33) 88755066

GERMANY
Frankfurt 71
Tel.: (49-69) 237492

Grasbrunn
Tel.: (49-89) 460060

Hannover 1
Tel.: (49-511) 634191

Nürnberg 20
Tel.: (49-911) 598930

Siegburg
Tel.: (49-241) 660 84-86

Stuttgart 1
Tel.: (49-711) 692041

ITALY
Assago
Tel.: (39-2) 89213.1

Casalecchio di Reno (BO)
Tel.: (39-51) 591914

Rome
Tel.· (39-6) 844-3341

NETHERLANDS
Eindhoven
Tel.: (31-40) 550015

SPAIN
Barcelona
Tel.: (34-3) 4143300

Madrid
Tel.: (34-1) 4051615

SWEDEN
Kista
Tel.: (46-8) 7939220

SWITZERLAND
Grand-Saconnex
(Genève)
Tel.: (41-22) 7986462

UNITED KINGDOM and EIRE
Marlow, Bucks
Tel.: (44-628) 890800

AMERICAS

BRAZIL
São Paulo
Tel : (55-11) 883-5455

CANADA
Brampton, Ontario
Tel.: (416) 455-0505

U.S.A.
Alabama
Huntsville: (205) 533-5995

Arizona
Phoenix: (602) 867-6340

California
Santa Ana: (714) 957-6081
San Jose: (408) 452-8585

Colorado
Boulder: (303) 449-9000

Illinois
Schaumburg: (708) 517-1890

Indiana
Kokomo: (317) 459-4700

Massachusetts
Lincoln (617) 259-0300

Michigan
Livonia: (313) 462-4030

New Jersey
Voorhees: (609) 772-6222

New York
Poughkeepsie: (914) 454-8813

North Carolina
Raleigh: (919) 787-6555

Texas
Carrollton: (214) 466-8844

FOR RF AND MICROWAVE POWER TRANSISTORS CONTACT THE FOLLOWING REGIONAL OFFICE IN THE U.S.A.

PENNSYLVANIA
Montgomeryville: (215) 362-8500

ASIA/PACIFIC

AUSTRALIA
Edgecliff
Tel.: (61-2) 3273922

HONG KONG
Wanchai
Tel.: (852-5) 8615788

INDIA
New Delhi
Tel.: (91-11) 3715191

MALAYSIA
Pulau Pinang 10400
Tel.: (04) 379735

KOREA
Seoul 121
Tel.: (82-2) 553-0399

SINGAPORE
Singapore
Tel.: (65) 4821411

TAIWAN
Taipei
Tel.: (886-2) 755-4111

JAPAN

JAPAN
Tokyo 108
Tel. (81-3) 3280-4121

Information furnished is believed to be accurate and reliable. However, SGS-THOMSON Microelectronics assumes no responsability for the consequences of use of such information nor for any infringement of patents or other rights of third parties which may results from its use. No license is granted by implication or otherwise under any patent or patent rights of SGS-THOMSON Microelectronics. Specifications mentioned in this publication are subject to change without notice. This publication supersedes and replaces all informations previously supplied. SGS-THOMSON Microelectronics products are not authorized for use as critical components in life support devices or system without express written approval of SGS-THOMSON Microelectronics.

© 1991 SGS-THOMSON Microelectronics – All Rights Reserved
Printed by AGC - Gessate, (MI)
Mentor is a trademark of Mentor Graphics Corporation
Valid is a trademark of Valid Logic Systems Inc.
System Hilo is a trademark of GenRad Inc.
Verilog XL is a trademark of Cadence Design Systems Inc.

SGS-THOMSON Microelectronics GROUP OF COMPANIES
Australia - Brazil - France - Germany - Hong Kong - Italy - Japan - Korea - Malaysia - Malta - Morocco - The Netherlands - Singapore - Spain - Sweden - Switzerland - Taiwan - United Kingdom - U.S.A.

RO/1