44689037

CONTROL DATA CORPORATION

LINEWRITER 400/800

MODELS CT301-C/E AND CT302-C/E WITH RS-232 SERIAL INTERFACE

INSTALLATION AND CHECKOUT
FACTORY SWITCH SETTINGS
CHOOSING A LOCATION
INPUT POWER CONVERSIONS
INTERFACE SIGNALS

SET–UP AND REFERENCE MANUAL

TABLE 1-2. ELECTRICAL SPECIFICATIONS

60 HZ UNIT		
a.	Voltage	104 to 128 (nominal 120 VAC RMS)
b.	Phase	Single
c.	Frequency	59.0 to 60.6 Hz
d.	Current	Less than 6.0 amps 360 lpm Less than 9.0 amps 720 lpm
e.	KVA	0.75 KVA max - 360 lpm 1.1 KVA max - 720 lpm

50 HZ UNIT (OPTIONAL)		
a.	Voltage	Range 1 - 191 to 235 VAC RMS (Nominal 220 VAC RMS) Range 2 - 208 to 256 VAC RMS (Nominal 240 VAC RMS)
b.	Phase	Single
c.	Frequency	49.0 to 50.5 Hz
d.	Current	Range 1 - less than 3.3 amps 360 lpm Range 1 - less than 6.0 amps 720 lpm Range 2 - less than 3.0 amps 360 lpm Range 2 - less than 5.5 amps 720 lpm
e.	KVA	0.77 KVA max. - 360 lpm 1.2 KVA max. - 720 lpm

50 HZ/60 HZ UNIT (OPTIONAL)		
a.	Voltage	50 Hz - Range 1 - 191 to 235 (nominal 220 VAC RMS) 50 Hz - Range 2 - 208 to 256 (nominal 240 VAC RMS) 50 Hz - Range 4 - 87 to 107 (nominal 100 VAC RMS) 60 Hz - Range 3 - 104 to 128 (nominal 120 VAC RMS) 60 Hz - Range 5 - 87 to 107 (nominal 100 VAC RMS)
b.	Phase	Single
c.	Frequency	50 Hz - 49.0 to 50.5 Hz 60 Hz - 59.0 to 60.6 Hz
d.	Current	50 Hz - Range 1 less than 4.0 amps 360 lpm Range 1 less than 6.0 amps 720 lpm Range 2 less than 3.6 amps 360 lpm Range 2 less than 5.5 amps 720 lpm 60 Hz - Range 3 less than 5.5 amps 360 lpm Range 3 less than 9.0 amps 720 lpm Range 4 & 5 less then 6.0 amps 360 lpm Range 4 & 5 less then 11.8 amps 720 lpm
e.	KVA	0.75 KVA max - 360 lpm 1.2 KVA max. - 720 lpm

INPUT POWER CONVERSIONS 50/60 HZ UNITS ONLY

The printer comes from the factory specifically wired for your application. Conversion within the printer from one frequency of operation to another requires reprogramming of the ac power board plug for the required configuration and changing the 50 HZ or 60 HZ band pulley. 60 HZ units come equipped with a power cord and is terminated with a non-locking 3 prong plug, 50 HZ units come equipped with a power cord which is unterminated at the wall plug end. Refer to Figure 1-5 for input power frequency modifications on the universal programming board. The extra 50 Hz or 60 Hz band pulley is stored on early units, in an accessory box. In later units it is stored in the printer's interior and is located beneath the right rear power board cover (as viewed from the front of the printer with the bonnet open).

For voltage only changes move the voltage selection jumper plug from its present position on 4PC1 J1-J5 to the selected voltage position J1-J5.

For frequency and voltage changes perform the following procedure;

1. Change the Band Drive Pulley as follows. Remove the ribbon and print band. Remove the band motor flywheel by removing the nut on top. Refer to the Maintenance Manual procedure, Right Band Pulley and Shaft Replacement for a drawing of the parts.
2. Loosen the band motor mounting screws to release belt tension.
3. Pry up on the pulley to remove. Replace the pulley with the other frequency pulley in the location described above. The 50 Hz pulley is larger than the 60 Hz pulley.
4. Position the drive belt on the pulley and perform the Band Drive Belt Adjustment procedure in the Maintenance Manual.
5. Install the flywheel and its nut. Install the band and ribbon. Perform the Band Tracking Adjustment procedure in the Maintenance Manual.
6. Move the frequency plug to the correct frequency position on 4PC1 J9 (50 Hz), J10 (60 Hz).
7. Interchange the transformer cables for 50 and 60 Hz on the backplane board 1BP1-J9 with the unused cable plugged into the storage location on 4PC1.
8. Move the voltage selection jumper plug on 4PC1 to the correct voltage position J1-J5.

REVISION RECORD

REVISION	DESCRIPTION
01 JULY., 83	Pre-release of the Linewriter 400 Set-Up and Reference Manual.
A NOV., '83	Release of the CDC Linewriter 400 Set-Up and Reference Manual.
B FEB., '84	Added 800 LPM Information and Interface Signals.
C JULY '84	Restructured entire manual. Revised Installation and Checkout section. Added Quiet Cabinet information.
D JAN., '85	Added clarification to installing ROM's into 1PC1, and incorporated the following ECO's: ECO PH20308, and ECO PH20487
E APRIL '85	Added Backplane Switch Settings and the following ECO's:: ECO PH20598, and ECO PH20695

PUBLICATION NO.		IDENTIFICATION NO.
44689037		

Revision Procedure:

The revision record page is revised for each revision package to reflect the revision sequence: (Pre-Release) Rev. 01, 02, etc; (Release) Rev. A, Rev. B, Rev. C, etc. The revision record page also provides a brief description of each change. A manual update revision package will be available for manuals after the Release revision of the manual. Each page revised in an update revision package will have the month and year printed in the lower right hand corner. This same date would appear in the revision column above, just below the revision identification. An instruction sheet cover is with each revision package, explaining page removal and insertion and reason for the change. The instruction sheets for revision packages are then to be placed at the back of the manuals as a record of the change.

MANUAL TO EQUIPMENT LEVEL CORRELATION

This manual reflects the equipment configurations listed below.

EQUIPMENT TYPE	SERIES	TOP LEVEL ASSEMBLY	COMMENTS
CT301-C	4-12	59829802	RS-232 I/O Connector (Version 1)
CT301-E	8-12	59829804	RS-232 I/O Connector (Version 1)
CT302-C	1-8	59829852	RS-232 I/O Connector (Version 1)
CT302-E	4-8	59829854	RS-232 I/O Connector (Version 1)

PREFACE

This manual contains switch setting information and installation and checkout instructions for the Linewriter printers. This manual will aid the user as it also contains reference material (such as power/frequency conversions) which may be desired at a later date.

The publications listed below are related publications for these printers.

PUBLICATION	PUBLICATION NUMBER
Set-Up and Reference Manual (With OEM Parallel Interface)	44689053
Set-Up and Reference Manual (With Series 1 Interface)	44689059
Maintenance Manual	44689032
Technical Manual	44689051
Parts Identification Manual	44689062

WARNING: This equipment generates, uses and can radiate radio frequency energy and if not installed and used in accordance with the instructions manual, may cause interference to radio communication. It has been tested and found to comply with the limits for a Class A peripheral computing device pursuant to Subpart J of Part 15 of the FCC Rules which are designed to provide reasonable protection against such interference when operated in a commercial environment. Operation of this equipment in a residential area is likely to cause interference in which case the user, at his own expense, will be required to take whatever measures may be required to correct the interference.

TABLE OF CONTENTS

LIST OF FIGURES

LIST OF TABLES

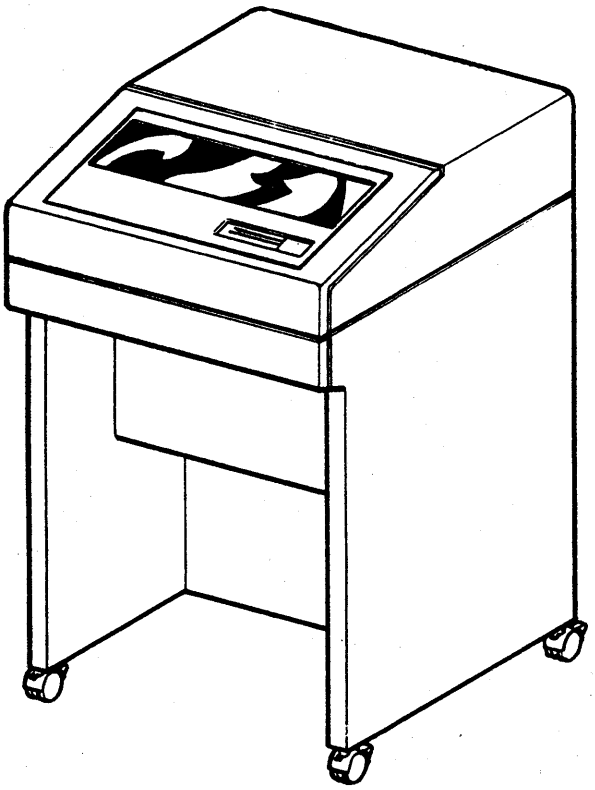

WITHOUT DOORS

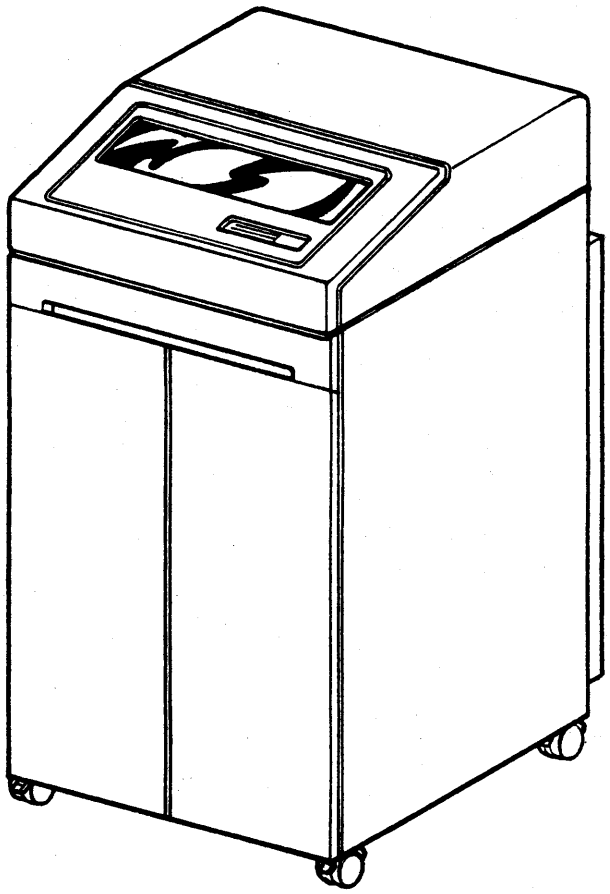

WITH DOORS

LINEWRITER 400/800

SECTION I
INSTALLATION AND CHECKOUT

Before performing this procedure, study Figure 1-1 to identify and locate the major components necessary for proper Installation and Checkout.

Section II contains the factory switch settings of the printed circuit boards in locations 1PC1, 1PC2, 1BP1, and 6PC1 if applicable. These switch settings may be changed by the Customer Engineer. The illustrations will serve as a reference and will allow you to return the printer's switch settings to their original factory switch positions.

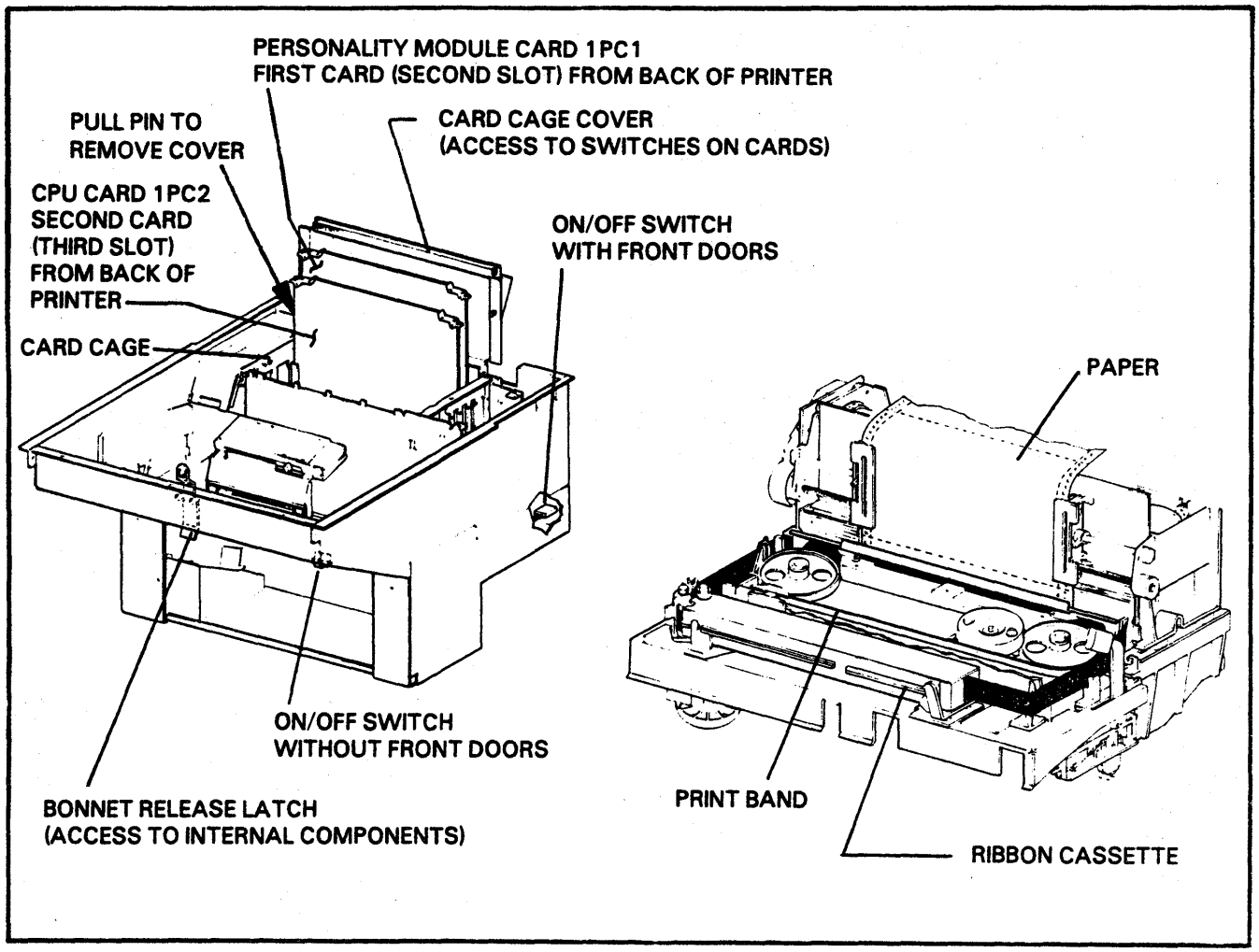

FIGURE 1-1. INSTALLATION AND CHECKOUT MAJOR COMPONENTS

Procedure

1. Roll the printer to an area where there is adequate environmental conditions, electrical power and clearance for service. Refer to Section III if necessary.

2. Plug the printer into its ac source and open the bonnet. The bonnet release latch is located in the center of the printer on the sloping surface directly beneath the bonnet window.

3. Install paper, ribbon cassette and print band per the Operator Instruction Cards beneath the bonnet as follows:

   a. Paper Installation-Card 1, Step 2 only.
   b. Ribbon Cassette Installation-Top Card.
   c. Print Band Installation-Card 7 (Back).

   If there are translator ROMs (small rectangular electronic components) in the print band's shipping container, open or remove the Card Cage Cover and install them in card 1PC1 at this time. See Figure 1-2. Refer to the document in the print band's shipping container for lower ROM bits and upper ROM bits part numbers. Install the upper bits ROM in the "High Order Bits" location, and the lower bits ROM in the "Low Order Bits" location. Be sure not to install the ROMs upside-down. The notches in the ROMs should line up with the notches in the ROM sockets.

> NOTE
> DIL NETWORKS, JUMPER WIRES AND INSTALLATION INSTRUCTIONS WHICH MAY COME WITH SOME KITS CAN BE DISCARDED. ONLY ROMs ARE USED ON LINEWRITER PRINTERS.

   Once the ROM set is installed, translation is enabled by accessing options 41, 42, 43, or 44. This will be done in step 9 if necessary.

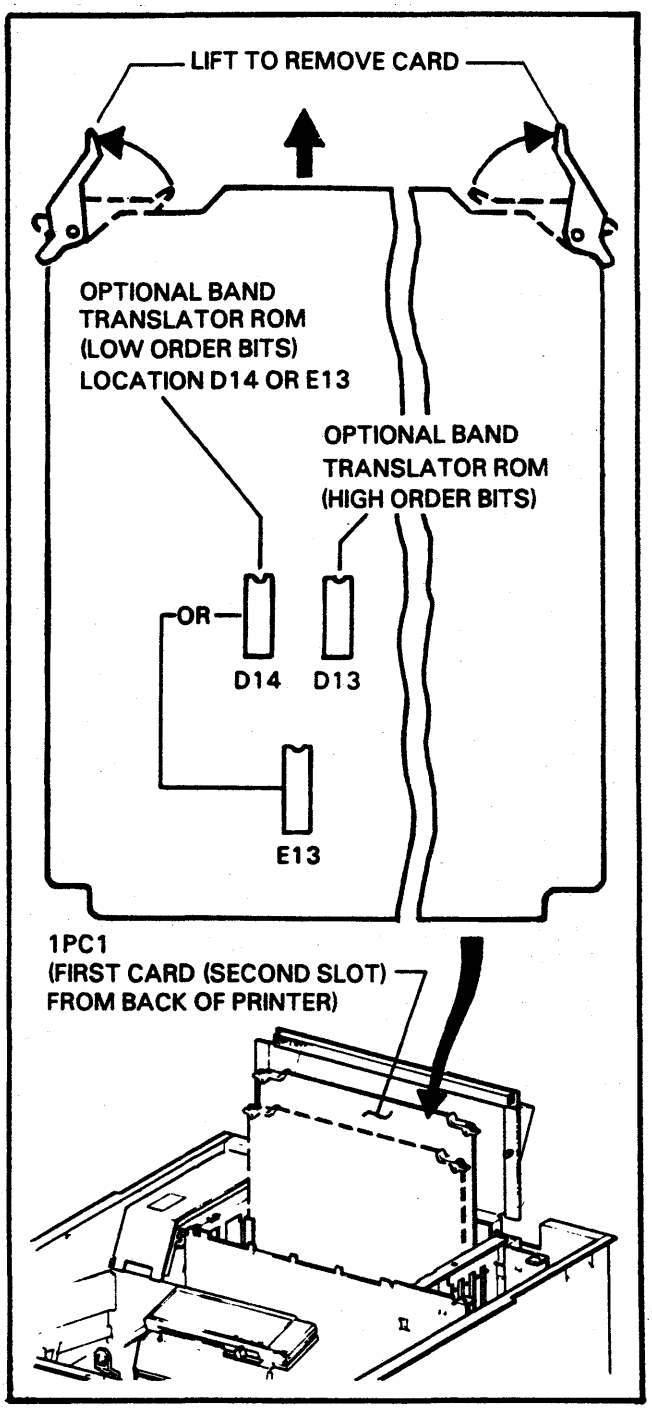

FIGURE 1-2. RS-232 TRANSLATOR ROM LOCATIONS

4. ***For units without front doors:*** Install and set up the paper platform or paper basket if provided. See Figure 1-6. Read Paper Basket Installation for the explanation of the basket accessories. The paper platform is installed such that the wires that run perpendicular to the edge of the paper are facing up. This allows the paper to slide along the wires when the paper contacts the paper platform. If the paper platform is installed up-side-down, the paper will catch on the wires as it enters the paper platform and will cause stacking problems.

   For units with front doors: Be sure the paper is loaded into the printer properly. See Figure 1-7 for the correct paper path through the printer. Press the FORM FEED switch until approximately 3 or 4 sheets of paper are resting on the paper platform at the back of the printer.

5. Turn the printer's power switch ON (located on the sloping outside surface, directly beneath the Control Panel for units without doors). For units with doors, the power switch is located on the back of the printer.

6. Press the STOP/START switch on the Control Panel. The START INDICATOR should light. Press it again, the START INDICATOR will go out.

7. Press the TEST PRINT switch to print a test pattern. Press the switch again to stop test printing. If printing does not occur or if the printer is performing erratically, assure the switches on cards 1PC1 and 1PC2 are set in the proper factory positions. Refer to Section II.

8. The options are pre-set at the factory in the "CE" mode. If the operator needs to access any options, the options will have to be assigned to the operator. The options are listed in Table 1-1. Only the options listed with this symbol (☆) may be assigned to the operator.The options are assigned to the operator by accessing the option and changing the setting from "CE" to "OP". Once the options are assigned to the operator the operator is provided the ability to access and change the options.If the option is accessed and the option will not change from "CE", it cannot be assigned to the operator.

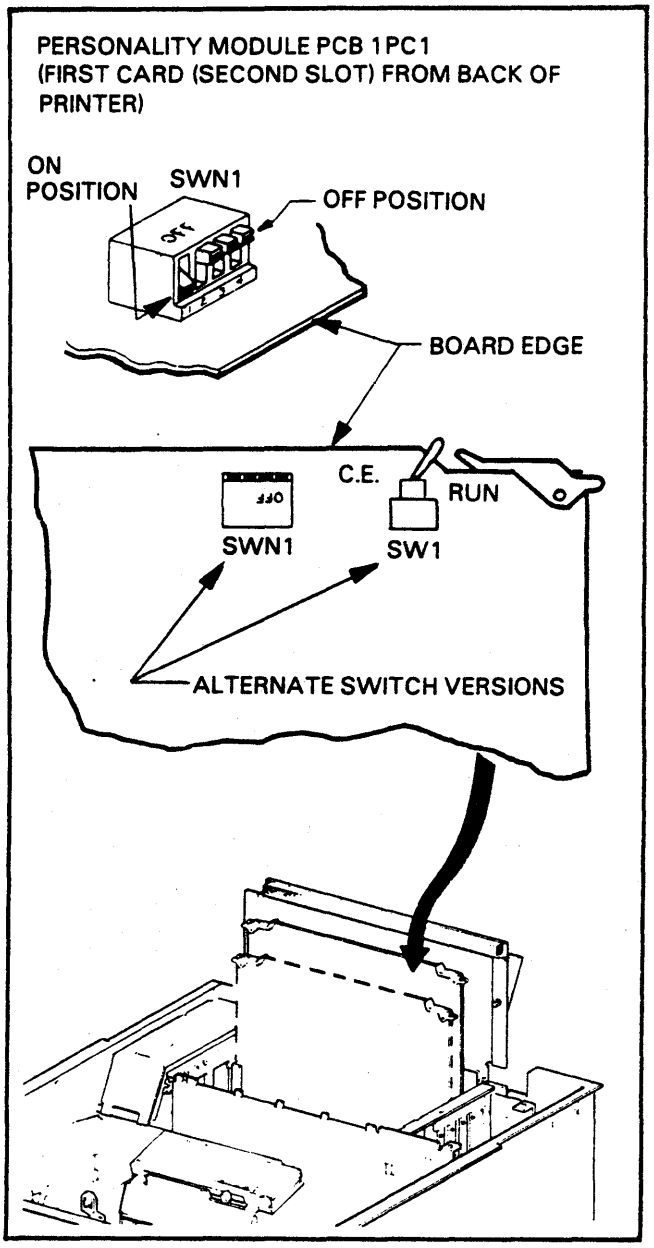

FIGURE 1-3. RS-232 PERSONALITY MODULE (1PC1) SWITCHES

9. Options are installed by performing steps 9a thru 9g. Install the options at this time. Either of two switch types may be installed on card 1PC1; SW1 or SWN1. Only the first switch (switch 1) is used on SWN1, refer to Figure 1-3. Install the options as follows:

a. Open the Card Cage Cover and set SW1 (or SWN1-1) on card 1PC1 to "CE" position (or "OFF" for SWN1-1), refer to Figure 1-3.
b. Set switches "A", "B" and "C" ON. See Figure 1-4. The IO SETUP indicator will light and "01" will appear on the left side of the Control Panel's display. This is option number 01 listed in Table 1-1.

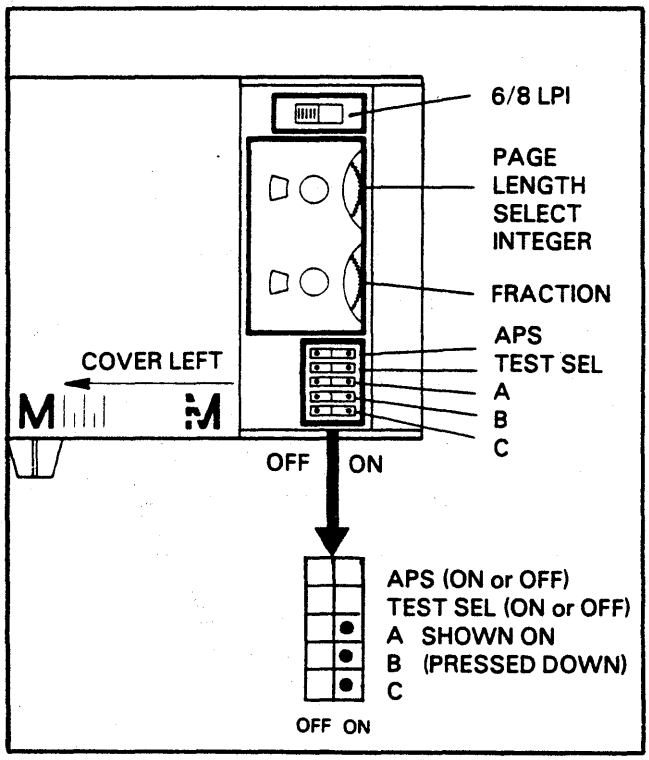

FIGURE 1-4. OPTION INSTALLATION-SWITCHES A, B AND C.

c. Press the STEP OPTION switch to step thru the options until the number of the option to be installed appears on the Control Panel's Status Display. The options can be accessed one at a time by pressing the STEP OPTION switch once for each option number or accessed quickly by keeping the STEP OPTION switch pressed.
d. Press the OPTION SELECT switch to change the option from "CE" to "OP" or vice versa. Press the STEP OPTION switch. This sets the option to the last value displayed on the Control Panel's display.
e. Repeat steps "c" and "d" until all the necessary options are installed.
f. Set switches "A", "B" and "C" OFF. The options are now burned into non-volatile memory and the IO SETUP indicator will extinguish.
g. Set SW1 (or SWN1-1) on card 1PC1 to "RUN" (or "ON" for SWN1-1) position, refer to Figure 1-3.

10. The settings for each option are pre-set at the factory. Refer to Table 1-1 "Factory Option Settings" for the setting of each option.

11. To change the values of any option settings, perform the following steps:

a. Set SW1 (or SWN1-1) on card 1PC1 to "CE" (or "OFF" for SWN1-1) position, refer to Figure 1-3.
b. Set switch "C" ON and switches "A" and "B" OFF as shown. The IO SETUP indicator will light and "01" will appear on the left side of the Control Panel's display.

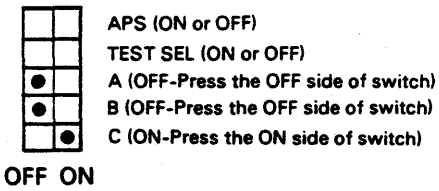

c. Press the STEP OPTION switch until the number of the desired option which needs to be changed appears on the Control Panel's Status Display. The setting of the option will appear on the right side of the Status Display. This is usually a Y/N (Yes or No) choice. "Y" means the option is desired, "N" means the option is not desired.

d. Press OPTION SELECT switch to change the option setting. If for example you want to transmit in the synchronous mode (option 30), you would change option setting 30 from "N" (no) to "Y" (yes). Press the STEP OPTION switch. This sets the option to the last value displayed on the Control Panel's display.

e. Repeat steps "c" and "d" until all the necessary options are changed.

f. Set switch "C" OFF. The option settings are now burned into non-volatile memory and the IO SETUP indicator will extinguish.

g. Set SW1 (or SWN1-1) on card 1PC1 to "RUN" (or "ON" for SWN1-1) position.

If the printer is ever returned to its default state, this procedure will have to be performed again.

12. The printer can be set to a default state. When this is performed, the options will take on the values listed in Table 1-1, "Default State". To default the printer perform the following:

    a. Power the printer OFF.
    b. Set SW1 (or SWN1-1) on card 1PC1 to "CE" (or "OFF" for SWN1-1) position.
    c. Press down and hold both the STEP OPTION switch and the OPTION SELECT switch while powering the printer ON.
    d. Set SW1 (or SWN1-1) on card 1PC1 to "RUN" (or "ON" for SWN1-1) position.
    e. The printer options are now in their default state.

13. Turn the printer's power switch OFF.

14. Install the I/O cable through the cutout in the back of the printer (bottom right side). See Figure 1-5. The cable and its connector must be CSA certified or rated UL94V-1 or better. Check to be sure the bonnet latches correctly. If it doesn't, the printer may have to be leveled. Leveling is achieved by rotating the appropriate caster's adjusting nut; clockwise will raise the caster, counter-clockwise will lower the caster.

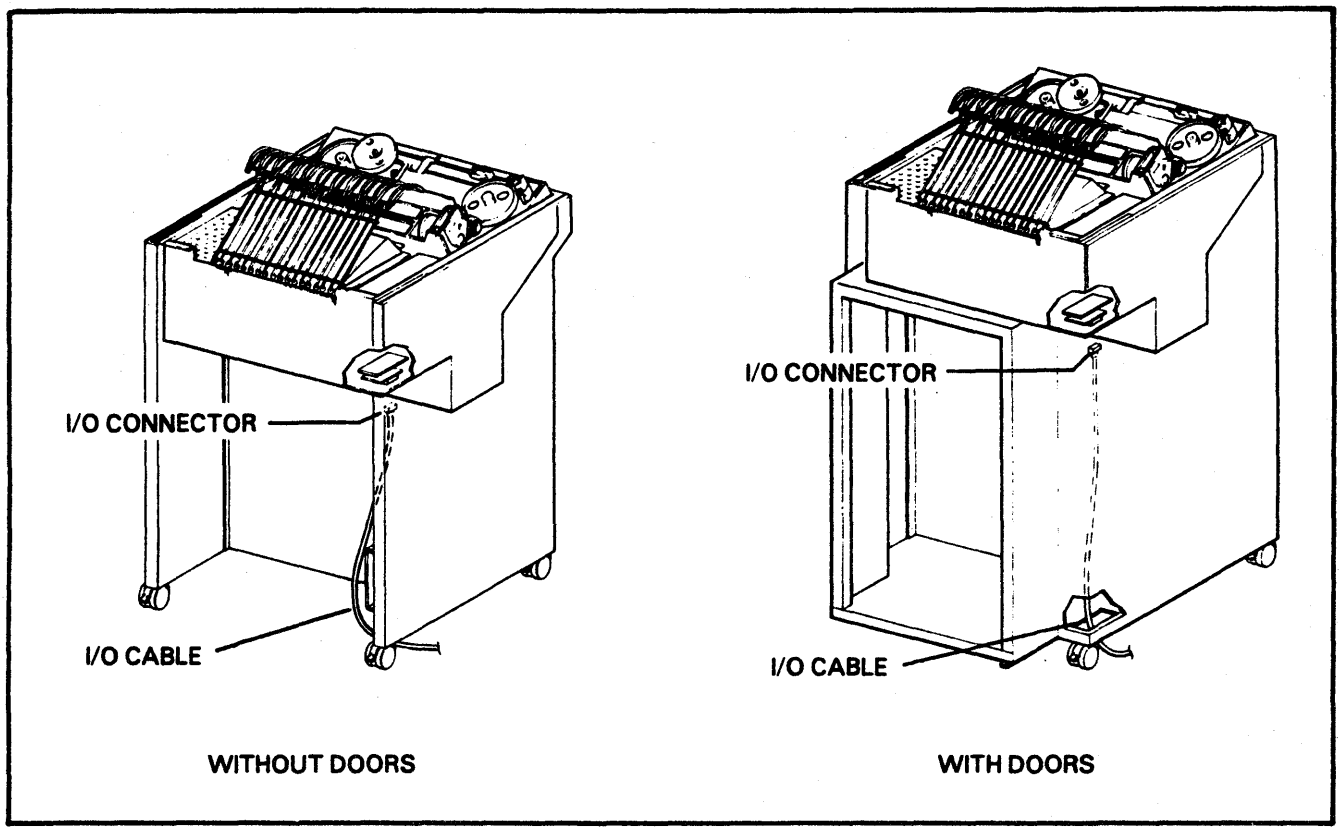

FIGURE 1-5. I/O CABLE INSTALLATION

15. Record the options that have been installed in Table 1-2 for future reference.

16. The printer is ready to be put On Line with the data source.

17. There are four dip switches on the Interface Adaptor board 6PC1. Refer to Section II and Table 1-1. Switches 1 and 2 when in Fail Safe position and no I/O cable attached, assures that signal transmission from the data source stops and cannot be restarted until the I/O cable is attached. However, in this position it decreases the amount of noise immunity. Fail Safe would be used in the asynchronous mode to prevent loss of data when the I/O cable is disconnected. The Normal position gives high noise immunity and is normally used in the synchronous mode. Switches 3 and 4 are used to choose which pin number of the I/O cable the Reverse Channel Signal is to go out on.

18. Close and lock all access covers.

19. Installation and Checkout is now complete.

TABLE 1-1. OPTION SETTINGS FOR PART NUMBERS 59829802 AND 59829852

PART NUMBERS LOCATED ON BACK OF PRINTER

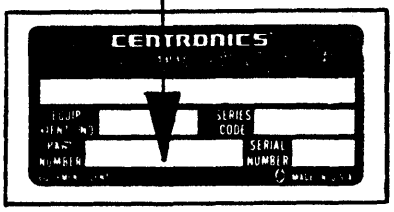

I. MAIN CONTROL PANEL OPTIONS:

DISPLAYED OPTION NUMBER	OPTION DESCRIPTION	DEFAULT STATE	FACTORY OPTION SETTINGS
☆01	RESERVED	-	N/A
☆02	AUTOMATIC NEW LINE ON CARRIAGE RETURN (Y/N)	N	N
☆03	LOWER TO UPPER CASE TRANSLATION (Y/N)	N	N
☆04	AUTOMATIC NEW LINE ON RIGHT MARGIN (Y/N)	Y	Y
☆05	SHIFT OUT/SHIFT IN ENABLE (N/LA/LB/F)	N	N
☆06	CONVERT VERTICAL TAB TO LINE FEED (Y/N)	Y	Y
☆07	INVALID CONTROL CODE-SUBSTITUTE CHARACTER CODE (00-FF)	FF	FF
☆08	INVALID CONTROL SEQUENCE-SUBSTITUTE CHARACTER CODE(00-FF)	FF	FF
☆09	TRANSMISSION ERROR SUBSTITUTE CHARACTER CODE (00-FF)	FF	FF
☆10	SUBSTITUTE ON INVALID CONTROL CODE (Y/N)	Y	Y
☆11	SUBSTITUTE ON INVALID CONTROL SEQUENCE (Y/N)	Y	Y
☆12	SUBSTITUTE ON TRANSMISSION ERROR (Y/N)	Y	Y
☆13	SOUND BELL ON INVALID CONTROL CODE (Y/N)	Y	Y
☆14	SOUND BELL ON INVALID CONTROL SEQUENCE (Y/N)	Y	Y
☆15	SOUND BELL ON TRANSMISSION ERROR (Y/N)	Y	Y
☆16	HALT ON INVALID CONTROL CODE (Y/N)	N	N
☆17	HALT ON INVALID CONTROL SEQUENCE (Y/N)	N	N
☆18	HALT ON TRANSMISSION ERROR (Y/N)	N	N
19	MONITOR DATA SET READY (Y/N)	N	N
20	MONITOR RECEIVED LINE SIGNAL DETECTOR (Y/N)	N	N
21	DROP DATA TERMINAL READY ON PRINTER OFF LINE (Y/N)	Y	Y
22	REQUEST TO SEND (RTS), THEN WAIT FOR CLEAR TO SEND (CTS) (HALF DUPLEX) (0) RTS AND SEND DATA WITHOUT WAITING FOR CTS (HALF DUPLEX) (1) CONSTANT RTS, THEN WAIT FOR CTS (2) CONSTANT RTS AND SEND WITHOUT WAITING FOR CTS (3) KEEP RTS OFF AND WAIT FOR CTS (4) KEEP RTS OFF AND SEND WITHOUT WAITING FOR CTS (5)	2	2

(Continued)

I. MAIN CONTROL PANEL OPTIONS (Continued):

DISPLAYED OPTION NUMBER	OPTION DESCRIPTION	DEFAULT STATE	FACTORY OPTION SETTINGS
23	REVERSE CHANNEL ENABLE (ALMOST FULL = OFF) (Y/N)	N	N
24	INVERT REVERSE CHANNEL (ALMOST FULL = ON) (Y/N)	N	N
25	SEND X ON / X OFF ENABLE (Y/N)	Y	Y
26	BREAK ENABLE (Y/N)	N	N
27	AUTO ANSWER ENABLE (Y/N)	N	N
28	PARITY ENABLE (Y/N)	Y	Y
29	ODD / EVEN PARITY (O/E)	O	O
30	SYNCHRONOUS MODE (Y/N)	N	N
31	SYNC TRANSMIT MODE w/ EXTERNAL CLOCK (Y/N)	N	N
32	PACERS FOLLOW START / STOP (Y/N)	N	N
33	SELECT BAUD RATE (11, 15, 30, 60, 12, 18, 24, 48, 96, 19)	96	96
34	DATA BYTE-BIT LENGTH (7/8)	7	7
35	NUMBER OF STOP BITS (1, 15, 2)	1	1
36	SET BUF ALMOST FULL THRESHOLD(X 16 DEC OR 10 HEX)(00-FF)	10	10
37	SET BUF ALMOST EMPTY THRESHOLD(X 16 DEC OR 10 HEX)(10-FF)	10	10
38	SET CARRIER DROPOUT TIME LIMIT (0-15 SECONDS)	00	00
39	SET NO ACTIVITY TIMER (0-99 SECONDS)	00	00
40	SET DATA TERMINAL READY OFF TIMER (0-7 SECONDS)	00	00
☆41	TRANSLATE ON 48 CHARACTER SET BANDS (Y/N/NA)	N	N
☆42	TRANSLATE ON 64 CHARACTER SET BANDS (Y/N/NA)	N	N
☆43	TRANSLATE ON 96 CHARACTER SET BANDS (Y/N/NA)	N	N
☆44	TRANSLATE ON 128 CHARACTER SET BANDS (Y/N/NA)	N	N
☆45	ENABLE CONTROL PANEL BUFFER CLEAR SWITCH (Y/N)	Y	Y
46	SET NUMBER OF SYNC CHARACTERS (1 or 2)	1	1
47	SET SYNC CHARACTER CODE (00 to FF hex)	16	16
☆48	RESERVED	-	-
☆49	RESERVED	-	-
☆50	RESERVED	-	-
☆51	RESERVED	-	-
☆52	RESERVED	-	-
53	AUTO START (Y/N)	N	N
54	IMMEDIATE STATUS RESPONSE (Y/N)	N	N
55	IGNORE NUL/DEL CODES (Y/N)	Y	Y

☆ CAN BE ASSIGNED TO BE OPERATOR CHANGEABLE BY THE CUSTOMER ENGINEER.

II. I/O ADAPTOR OPTIONS:

SWN 1 OFF (FAIL SAFE)	RECEIVER VOLTAGE SENSE LEVELS
SWN 2 OFF (FAIL SAFE)	RECEIVER VOLTAGE SENSE LEVELS
SWN 3 ON	REVERSE CHANNEL ON I/O PIN 11
SWN 4 ON	REVERSE CHANNEL ON I/O PIN 19

TABLE 1-2. CHECK LIST OF OPTIONS INSTALLED

OPTION NUMBER	INSTALLED		SETTING	OPTION NUMBER	INSTALLED		SETTING
	YES	NO			YES	NO	
01				29			
02				30			
03				31			
04				32			
05				33			
06				34			
07				35			
08				36			
09				37			
10				38			
11				39			
12				40			
13				41			
14				42			
15				43			
16				44			
17				45			
18				46			
19				47			
20				48			
21				49			
22				50			
23				51			
24				52			
25				53			
26				54			
27				55			
28							

Paper Basket Installation (See Figure 1-6)

The paper basket mounts on the back of the printer. The thumb screw on each mounting bracket is loosened and the mounting hook on the basket slips down in a hole in the top of the mounting bracket. The thumb screws on both mounting brackets are tightened to secure the paper basket.

The basket can be used with several accessories to insure proper stacking for all types of forms under humid and non-humid conditions. Boxes of forms can be irregular in their natural stacking tendency from box to box. The accessories can be used together, or in any combination to help modify the stacking tendencies of a particular box or a particular type of paper.

The following will describe the use of the accessories and their function.

The Paper Stops are used for all but the very largest forms. They are used to provide a front and rear stacking guides. They can be moved forward or backward depending on the size of the form.

The Paper Bracket Support is installed to control form stacks which have a valley at the top. The valley can be caused by the printer's tractor positions. Check the horizontal tractor positioning if the feed holes on the edges of the forms are not smooth and flat. Forms left in the box at the front of the printer can increase forms tension and deform the feed holes. The paper bracket support is compressed to mount in the bottom center of the basket. This bracket can improve all types of forms stacking.

The Fold Breaker assembly can be installed to help "break" the paper perforations as the paper leaves the printer. This is normally installed.

TABLE 1-1. ENVIRONMENTAL SPECIFICATIONS

Operating Temperature, Humidity, Barometric Pressure

Temperature Range - Dry Bulb	10°C - 40°C (50°F - 104°F)
Temperature Change (Max)	10°C (18°F) per 60 minutes
Relative Humidity Range	20 - 80%
Humidity Change (Max)	10% per 60 minutes
Dew Point Temperature Restrictions	Maximum 26°C (79°F) Minimum -4°C (25°F)
Barometric Pressure Standard	105 Kilopascals (kpa) 79.5 Kilopascals (kpa) (maximum equivalent altitude 6560 feet or 2000 meters)
High Altitude (Option)	105-Kilopascals (kpa) 69 Kilopascals (kpa) (maximum equivalent altitude 9850 feet or 3000 meters)

A high altitude optional cooling system is required for altitudes between 6560 and 9850 feet or the maximum temperature should be derated from 95°F to 87°F between 6560 to 9850 feet.

Maximum temperature of 104°F applies at altitudes up to 1000 feet. Above this altitude, the maximum temperature is derated linearly to 95°F at 6560 feet.

Non-Operating Temperature, Humidity, Barometric Pressure

Storage (Period Up To 3 Months)

Temperature Range	-10°C to 50°C (14°F to 122°F)
Temperature Change/Rate	15°C (27°F) per hour maximum
Humidity Range	10 to 90% R.H. non-condensing

Transit (Period Up To One Week)

Temperature Range	-40°C to 60°C -40°F to 140°F
Temperature Change/Rate	20°C (36°F) per hour maximum
Humidity Range	5 to 95% R.H.
Barometric Pressure	105 Kilopascals (kpa) 38 Kilopascals (kpa) (Maximum equivalent altitude 25,000 feet or 7600 meters)

CHOOSING A LOCATION

The important factors to be considered when choosing a location for the printer are environmental, electrical and service access requirements. Ideally a computer room environment is desired. See Table 1-1 for environmental specifications, Table 1-2 for electrical specifications and Figure 1-4 for service access specifications.

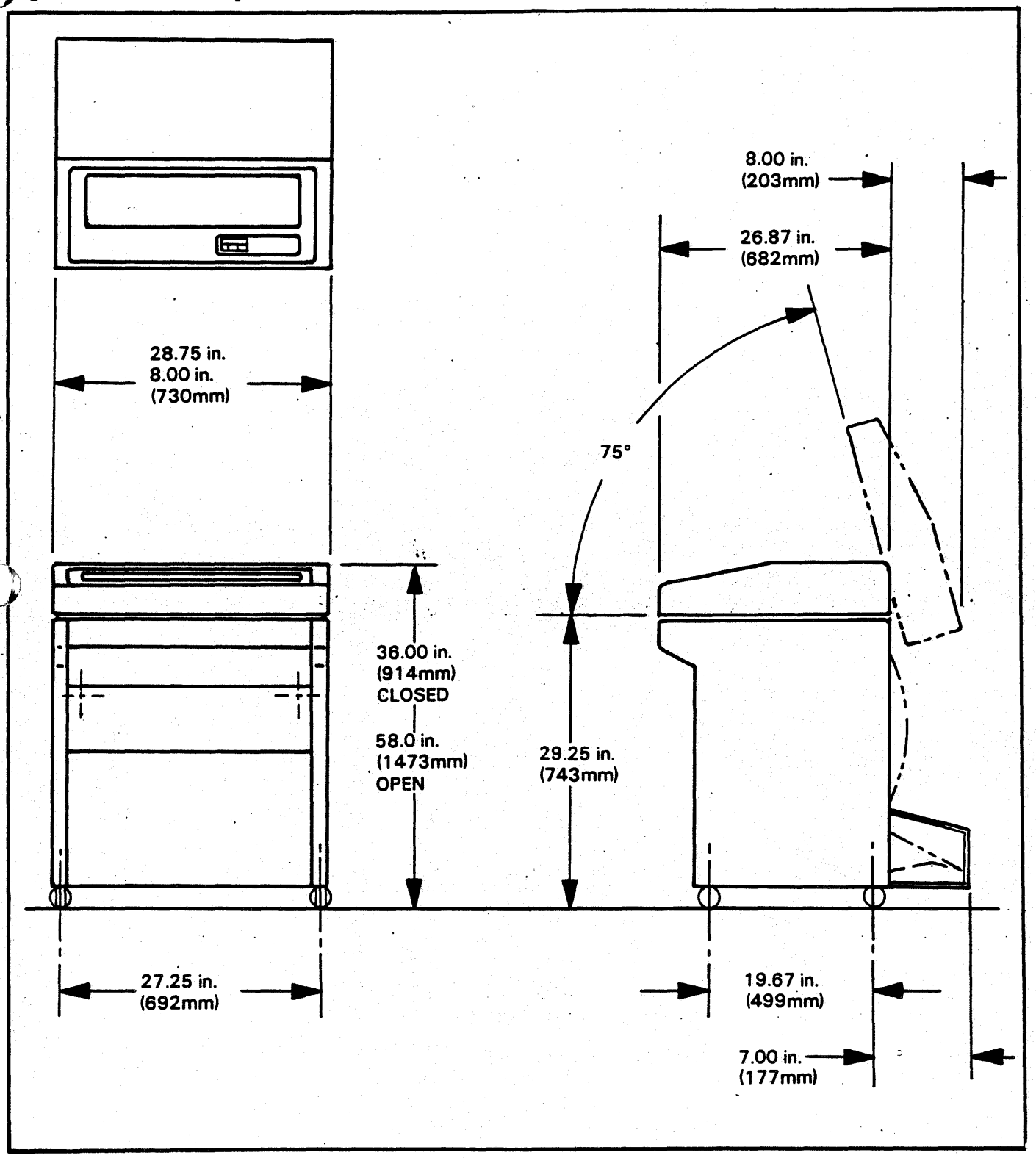

FIGURE 1-4. SERVICE ACCESS SPECIFICATIONS

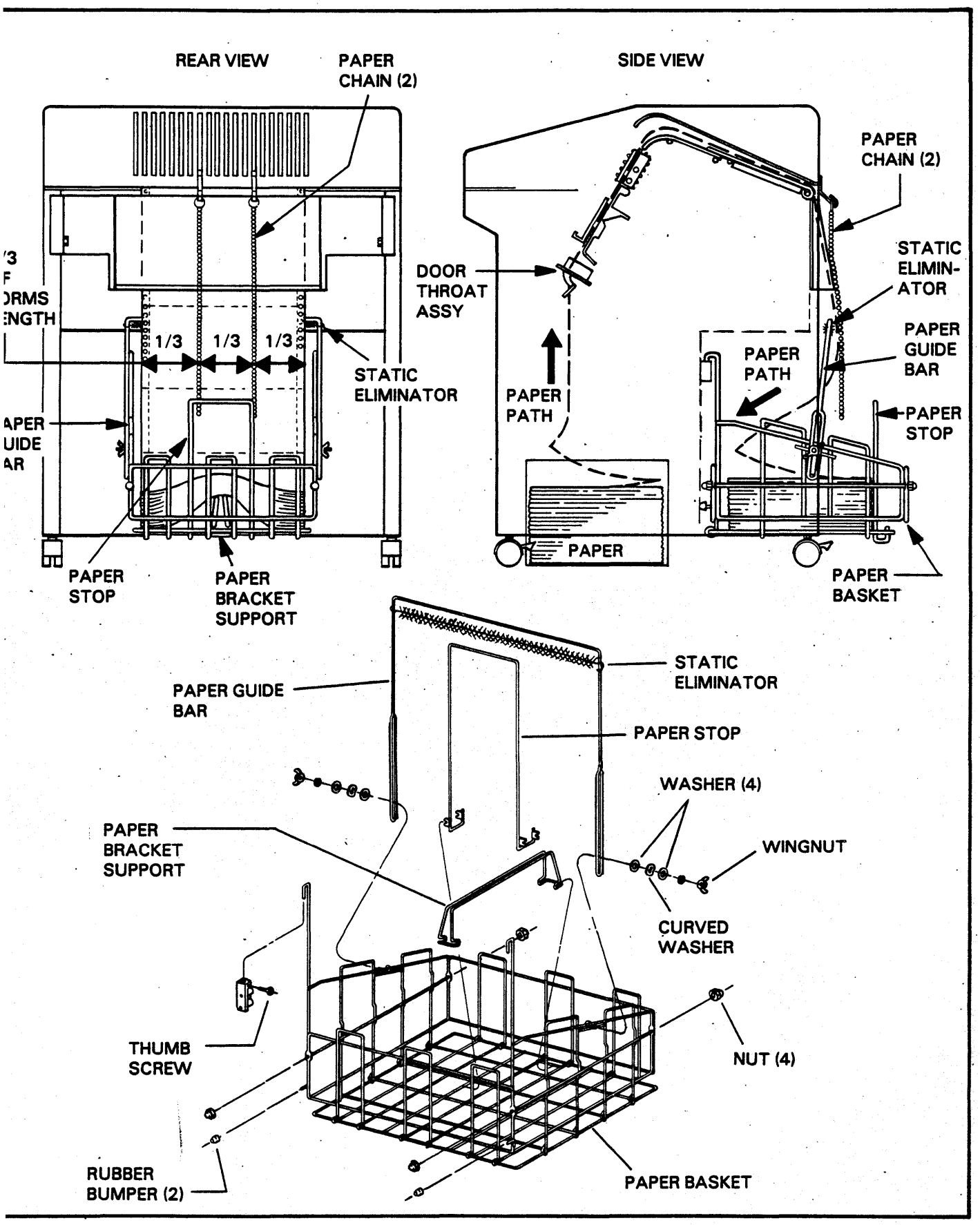

FIGURE 1-3. PAPER BASKET INSTALLATION AND SET-UP

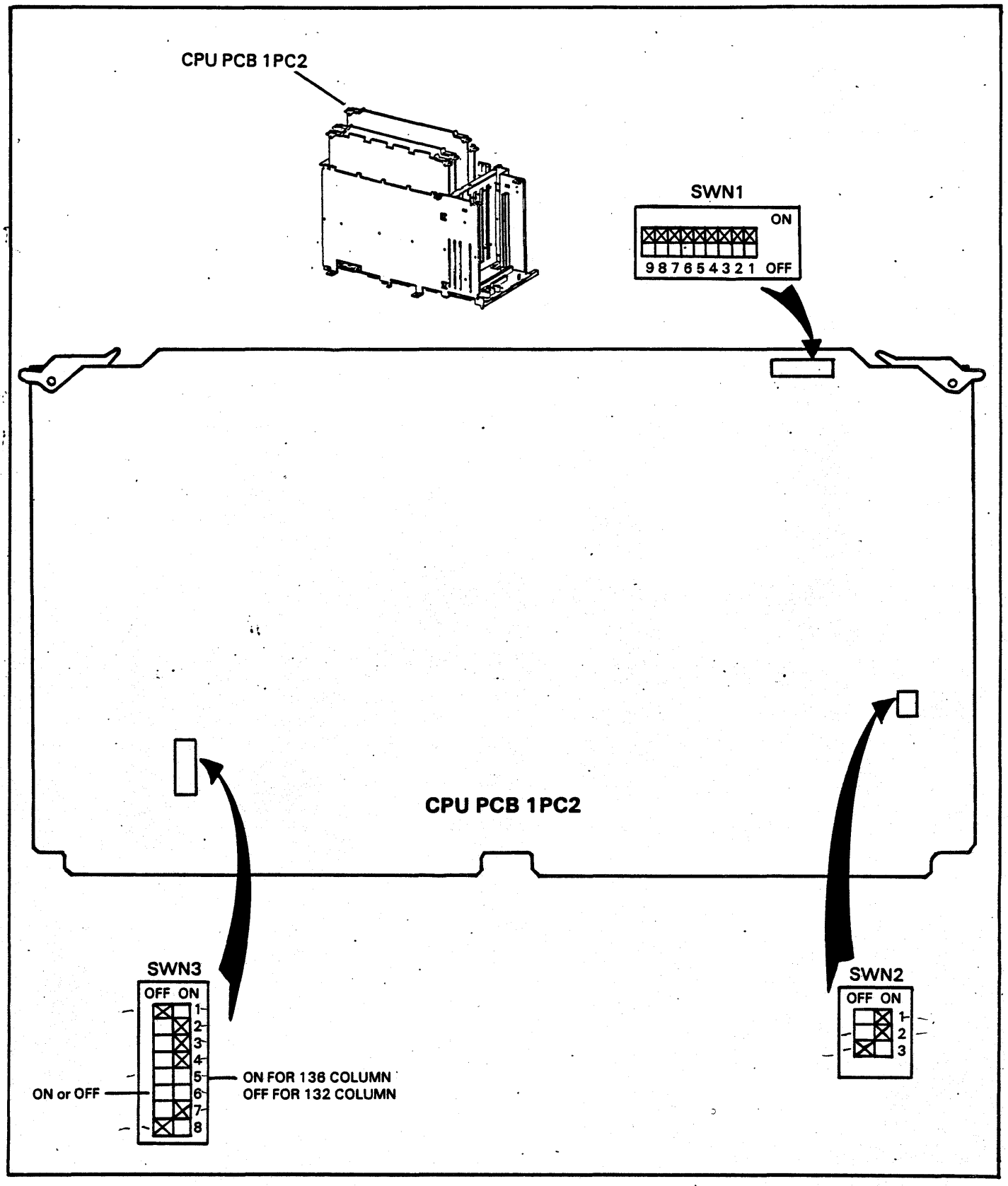

FIGURE 1-2. CPU (1PC2) FACTORY SWITCH SET-UP

INSTALLATION AND CHECKOUT

1. Roll the printer to an area where there is adequate environmental conditions, electrical power and clearance for service.

2. Plug the printer into its ac source.

3. Install paper, ribbon cassette and print band; see the flip cards beneath the bonnet. Also, refer to Card 4, "Interface Options" to become familiar with the options installed on the printer.

   If the print band has translator ROMs in its shipping container have the Customer Engineer install them and reset the DIP switches on 1PC1 at this time. The ROMs are installed on the personality module (1PC1). See Figure 1-1. Set the switch ON matches the character set of the band being installed. For example, if installing a 48 character print band, set that switch to the ON position, all other Select Translator ROM Switches should be OFF. If a band is installed which does not require translation but the translation ROMs are already installed on 1PC1, it is not necessary to remove the ROMs just set the equivalent switch on 1PC1 to the OFF position.

4. Install and set up the paper platform or paper basket if provided. See Figure 1-3. Read Paper Basket Installation for the explanation of the basket accessories. The paper platform is installed such that the wires that run perpindicular to the edge of the paper are facing up. This allows the paper to slide along the wires when the paper contacts the paper platform. If the paper platform is installed up-side-down, the paper will catch on the wires as it enters the paper platform.

5. Turn the printer's power switch ON (located on the sloping lower right front corner as viewed from the front of the printer).

6. Press the START/STOP switch on the Control Panel. The Start Indicator should light. Press it again, the Start Indicator will go out.

7. Press the TEST PRINT switch to print a test print pattern. Press the switch again to stop test printing. If printing does not occur or if the printer is performing erratically, assure the switches on 1PC1 and 1PC2 are set in the proper factory positions. See Figures 1-1 and 1-2.

8. Turn the power switch OFF.

9. Install the I/O cable through the opening in the bottom left side of the printer (as viewed from the front).

10. The printer is ready to be put On Line with the data source.

Paper Basket Installation

The optional paper basket mounts on the back of the printer. The thumb screw on each mounting bracket is loosened and the mounting hook on the basket slips down in a hole in the top of the mounting bracket. See Figure 1-3. The thumb screws on both mounting brackets are tightened to secure the paper basket.

The basket can be used with several accessories to insure proper stacking for all types of forms under humid and non-humid conditions. Boxes of forms can be irregular in their natural stacking tendency from box to box. The accessories can be used together, or in any combination to help modify the stacking tendencies of a particular box or a particular type of paper.

The paper basket and accessories are installed and mounted as shown in Figure 1-3. Not all accessories are supplied with each basket. The accessories vary with the type of unit because of design differences between 400 LPM and 800 LPM printers. The following will describe the use of the accessories and their function.

The Paper Stop is used for all but the very largest forms. It is used to provide a rear stacking guide. It can be moved forward or backward in conjunction with the position of the paper guide bar.

The Paper Guide Bar reduces static and varies the form's vertical drop over the center of the forms stack. It is adjusted to stack the forms against the back of the basket or the paper stop, if used. As the size of the paper stack rises, the guide bar can be readjusted to improve stacking. The static eliminator is positioned at the top of the paper guide bar in such a manner as to contact the forms at all times.

The Paper Chains can be added for forms which float away from the static eliminator on the paper guide bar. The chains are used to keep the forms falling straight down. The paper chain hooks are installed into the back of the printer by turning them 90°(from their normal operating position), pushing them through the desired grid opening, turning them back to their normal operation position, then sliding them down to the base of the grid opening. When seated, make sure the hooks are contacting bare metal for a good solid ground. The chains should be removed if the forms bunch up when exiting the printer. The paper stop and guide bar if used, must be positioned to control the forms falling into the paper basket.

The Paper Bracket Support is installed to control form stacks which have a valley at the top. The valley can be caused by the printer's tractor positions. Check the horizontal tractor positioning if the feed holes on the edges of the forms are not smooth and flat. Forms left in the box at the front of the printer can increase forms tension and deform the feed holes. The paper bracket support is compressed to mount in the bottom center of the basket. This bracket can improve all types of forms stacking.

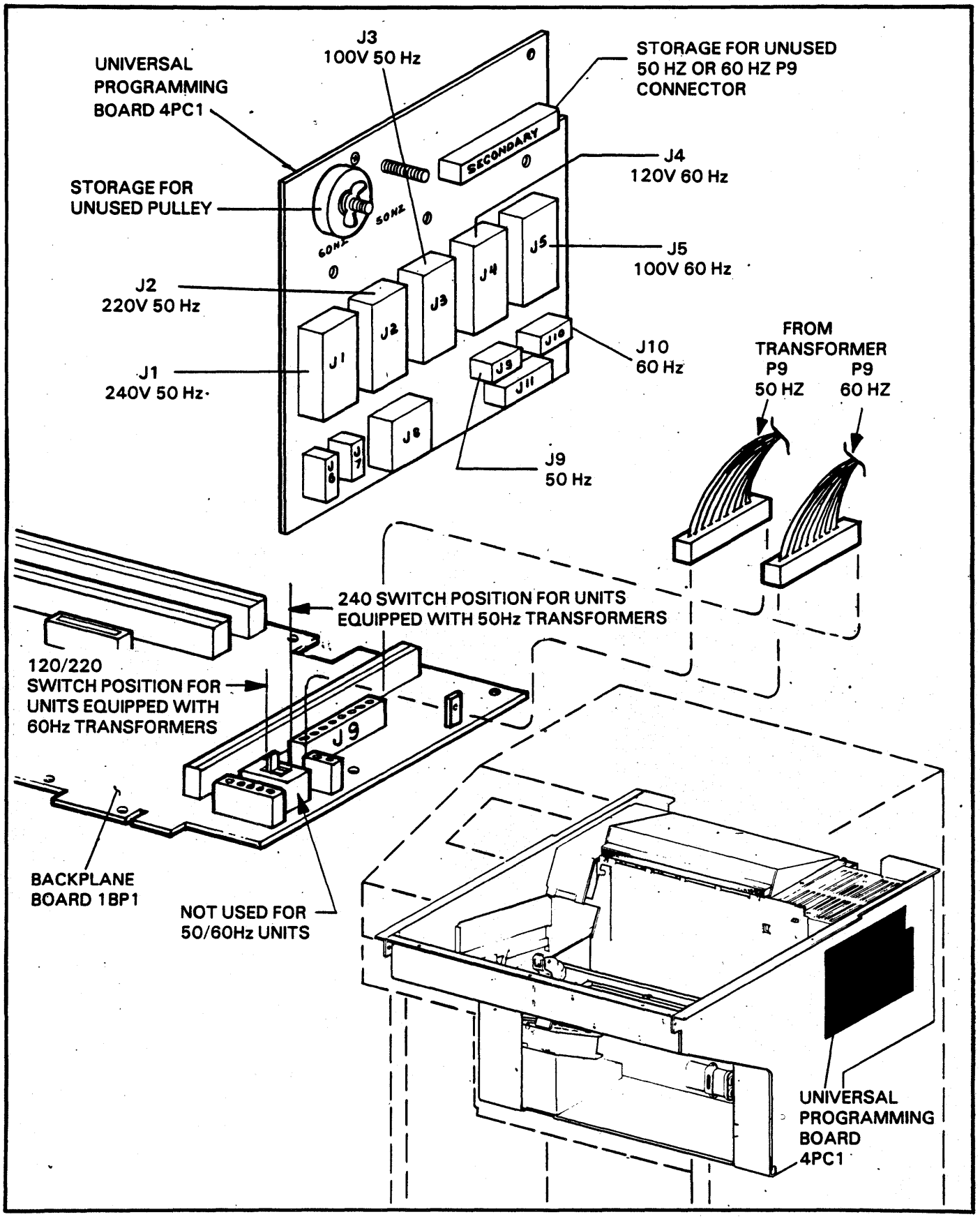

FIGURE 1-5. INPUT POWER FREQUENCY MODIFICATIONS 50 Hz/60 Hz UNITS ONLY

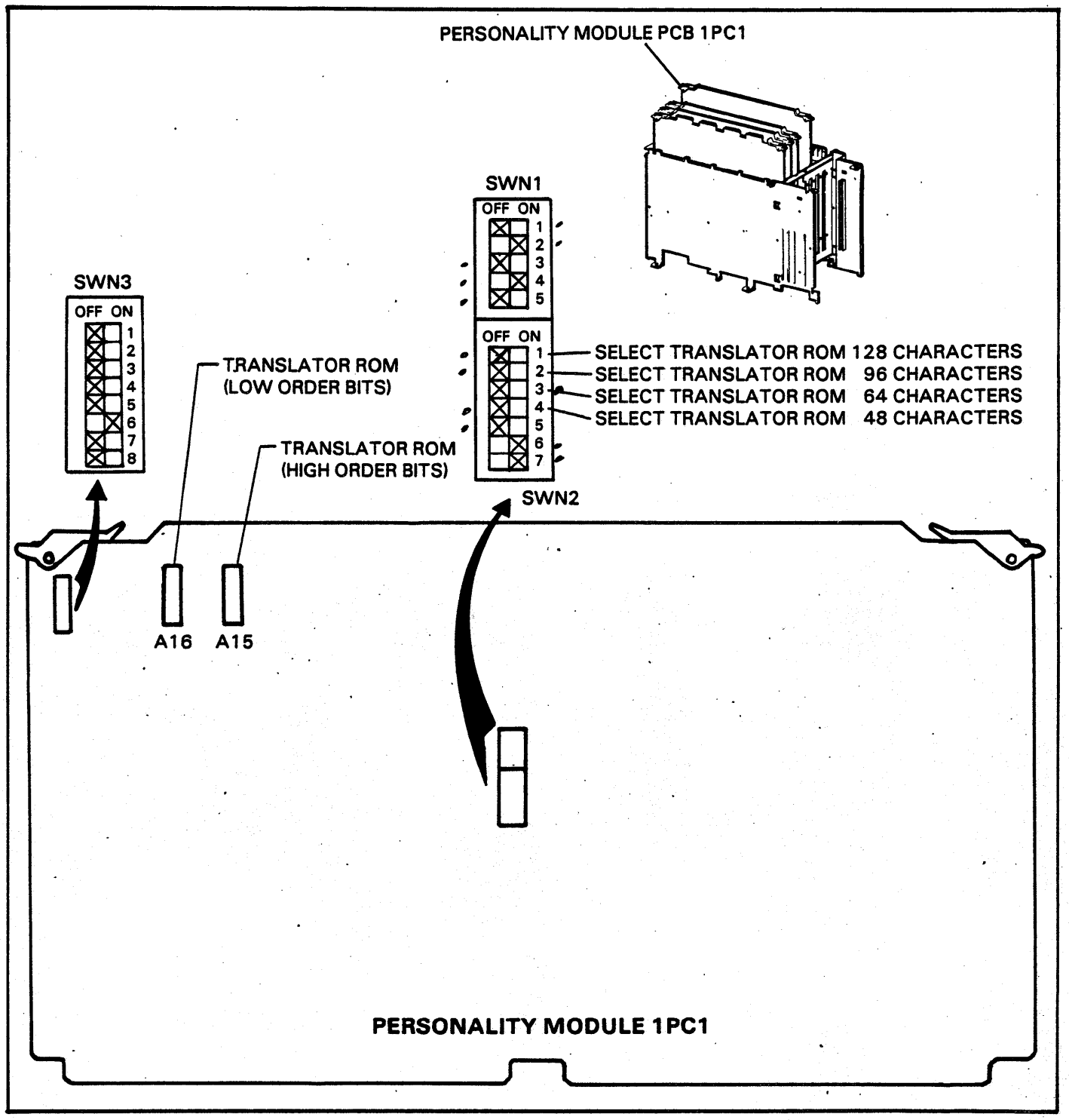

FIGURE 1-1. PERSONALITY MODULE (1PC1) FACTORY SWITCH SET-UP AND TRANSLATOR ROM LOCATIONS (FOR ASSEMBLY NUMBER 44682846).

(Continued)

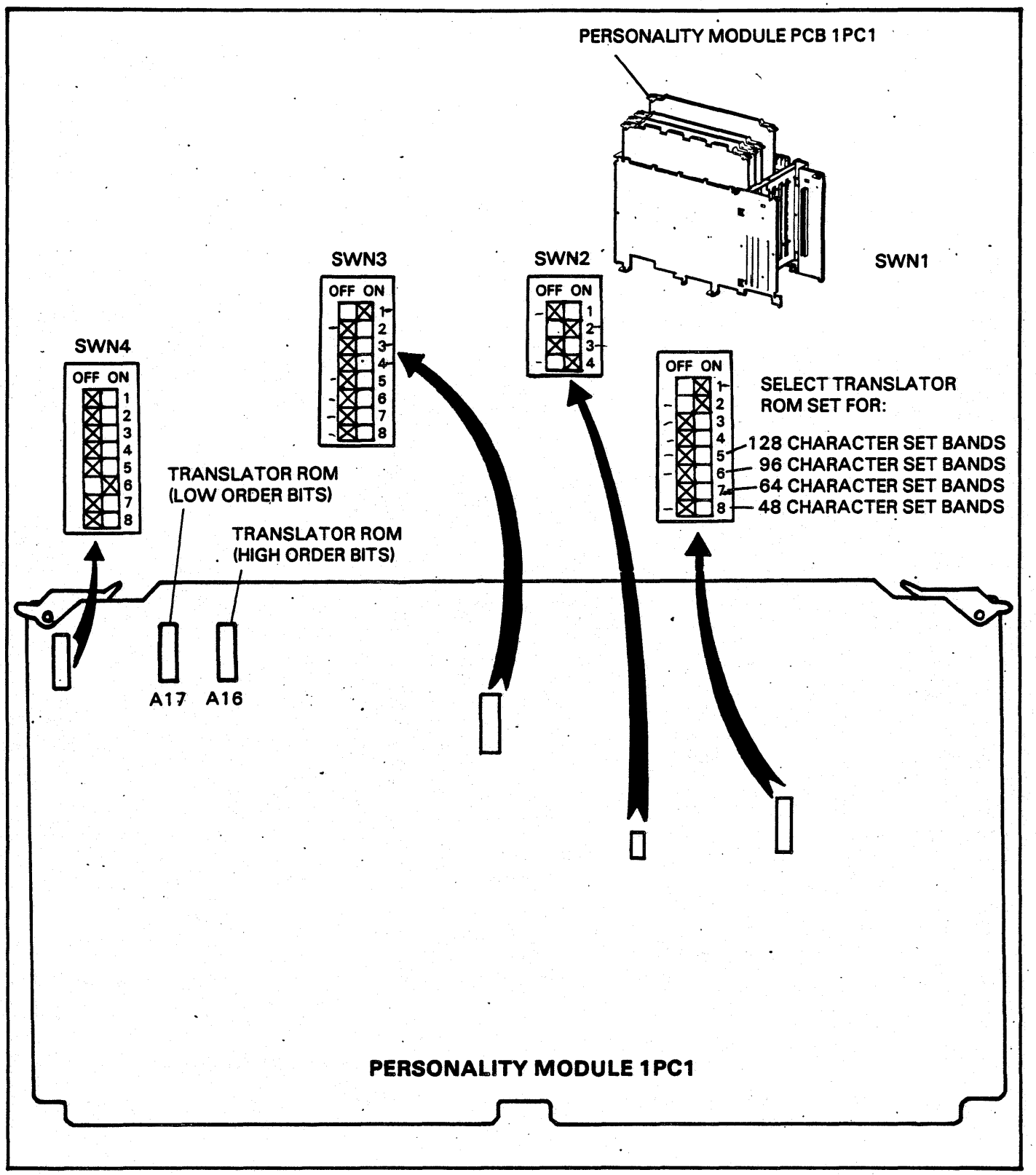

FIGURE 1-1. PERSONALITY MODULE (1PC1) FACTORY SWITCH SET-UP AND TRANSLATOR ROM LOCATIONS (FOR ASSEMBLY NUMBER 44682847/48).

INTERFACE SIGNALS

The minus sign before a signal name indicates the actual signal line has a negated logical sense being active when logical "0". A plus indicates positive logical sense being active when at a logical "1".

Band Identification 0 and 1

Two signal lines from the printer to the data source contain binary coded information which identifies the type of band currently on the printer.

Bottom of Forms (BOF)

This is a status line which is active (logic 1) when the forms are at the Bottom of Forms position. The line goes active when the form moves to the Bottom of Forms position, and goes inactive when it leaves this position. In non EVFU machines, Bottom of Forms is defined as being 3,4,5, or 6 lines (defined by DIP switches on the CPU board) before the Top of Forms position for either the Fixed Forms Length or the Selectable Forms Length Control Mode.

When the EVFU option is loaded, the Bottom of Forms location is defined by either Channel 2,8, or 12 by use of DIP switches on the CPU board.

-Buffer Clear

A signal from the data source (logic 0) to the printer that resets the print line buffer to column one if a forms motion command has not yet been received.

Data Strobe

A signal from the data source to the printer which indicates that a data character has been placed on the data lines.

Data 1 Thru 8 and Paper Instruction

These are signal lines from the data source to the printer which carry the codes for print data and forms motion commands.

Demand

A signal from the printer which is used to synchronize data transfer from the data source to the personality module.

EVFU Installed and EVFU Verify

In order to allow the data source to verify that the printer has an EVFU capability, the EVFU verify switch on the personality module must be closed.

Interface Verify

This allows the data source to verify that the I/O connector has been attached by jumpering pins 46 and 45 on the I/O connector together on the personality module.

On Line

A signal from the printer which, when active (logic 1) indicates to the data source that the printer has been placed On Line.

Parity Error

This is a signal line from the printer that will go active when a parity error is detected.

Parity Input

This is a signal line from the data source to the printer that will make the right parity sum (odd or even) for each character on the data lines.

Ready

A signal from the printer which when active (logic 1) indicates that no faults exist within the printer, paper is loaded and the printer is ready to be placed On Line.

Top of Forms (TOF)

This is a status line which is active (logic "1") when the forms are at the Top Of Forms position. The line goes active when the form moves to the Top Of Forms position, and goes inactive when it leaves this position. The Top of Forms location is defined by a counter in Forms Length Control mode, or by Channel 1 when the EVFU is loaded.

VFU RDY

This is a status line to the data source that when active indicates that the VFU is ready.

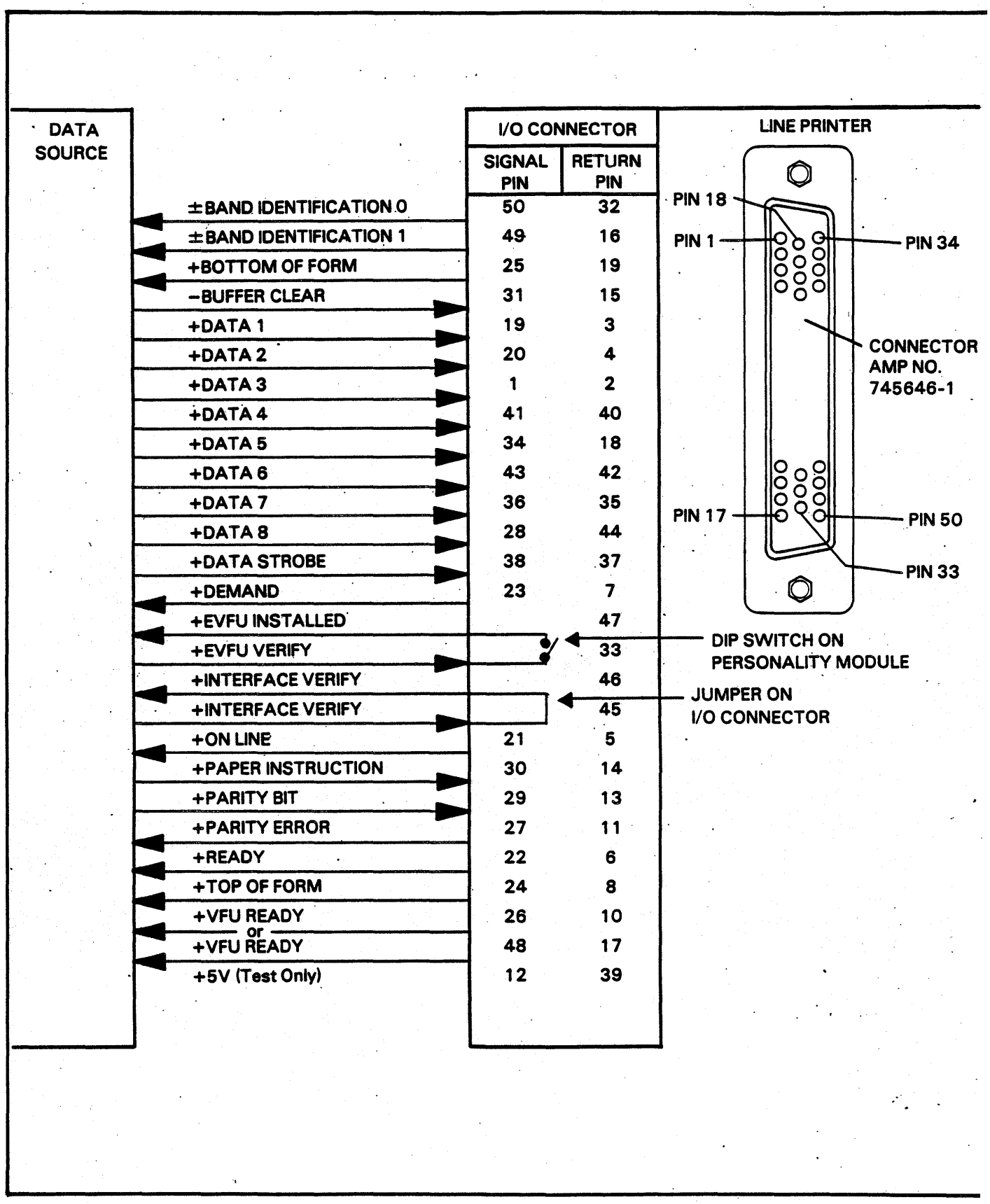

FIGURE 1-6. I/O SIGNALS AND PIN ASSIGNMENTS-"D" TYPE CONNECTOR

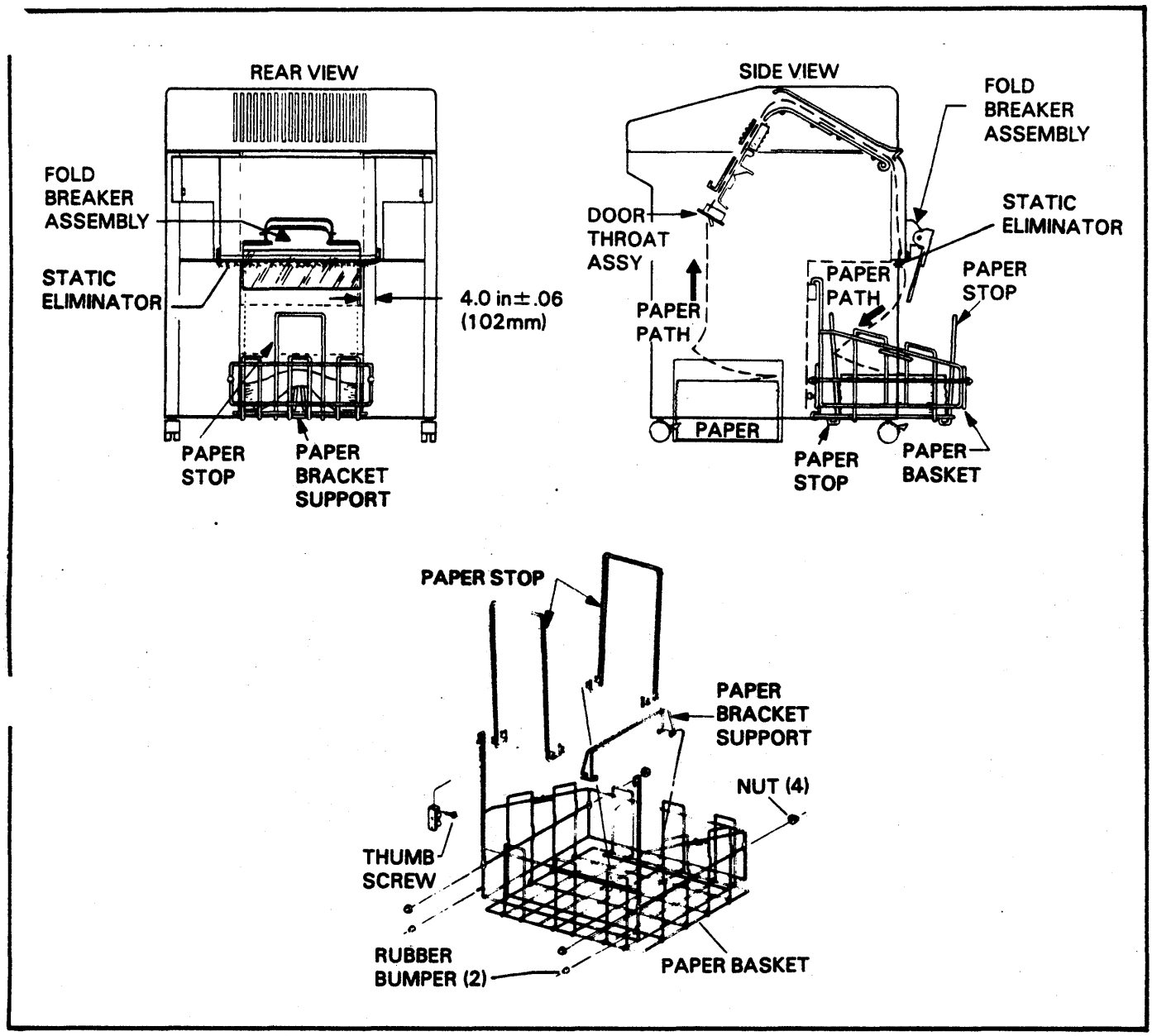

FIGURE 1-6. PAPER BASKET INSTALLATION AND SET-UP

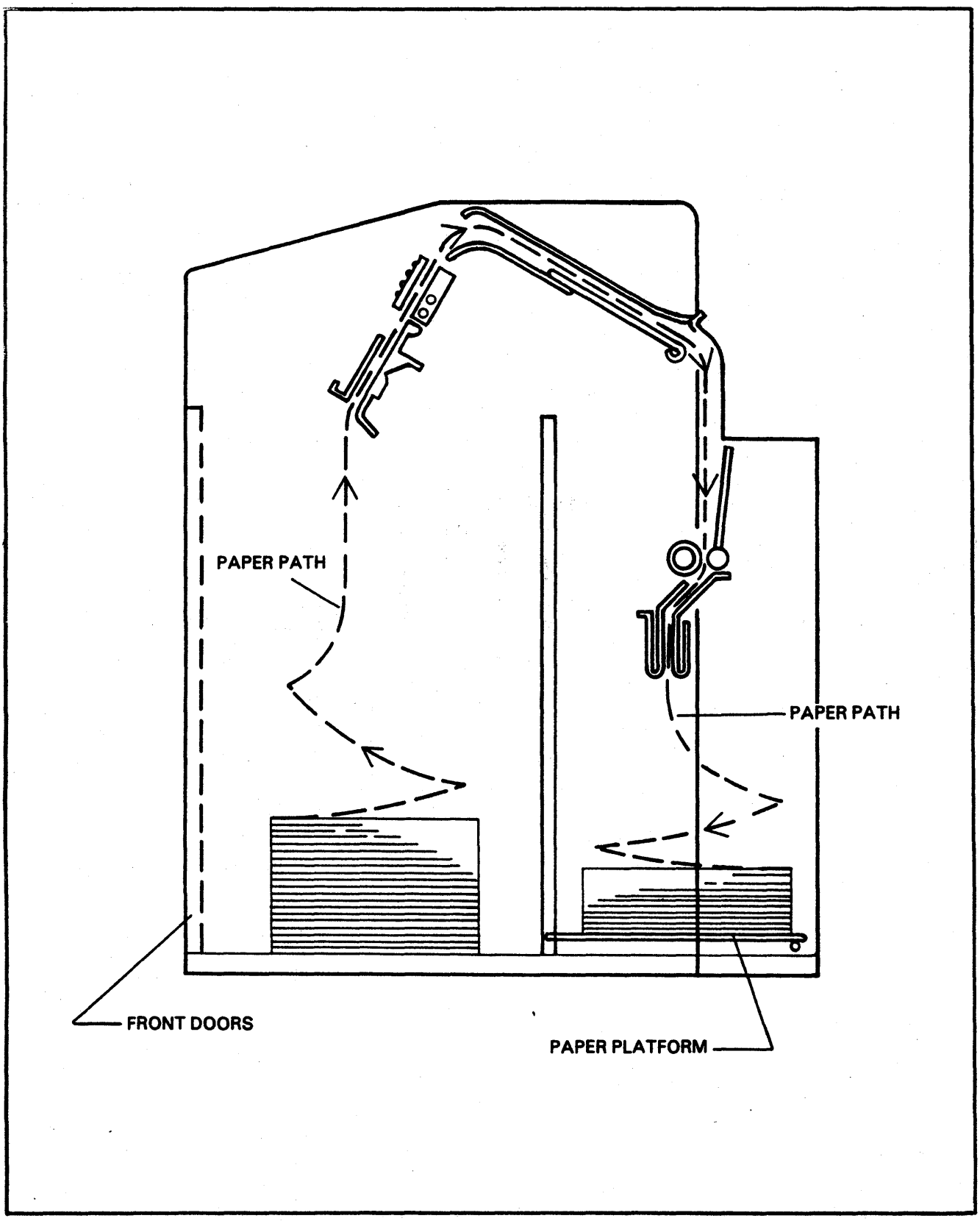

FIGURE 1-7. PAPER PATH FOR PRINTERS WITH FRONT DOORS

SECTION II
FACTORY SWITCH SETTINGS

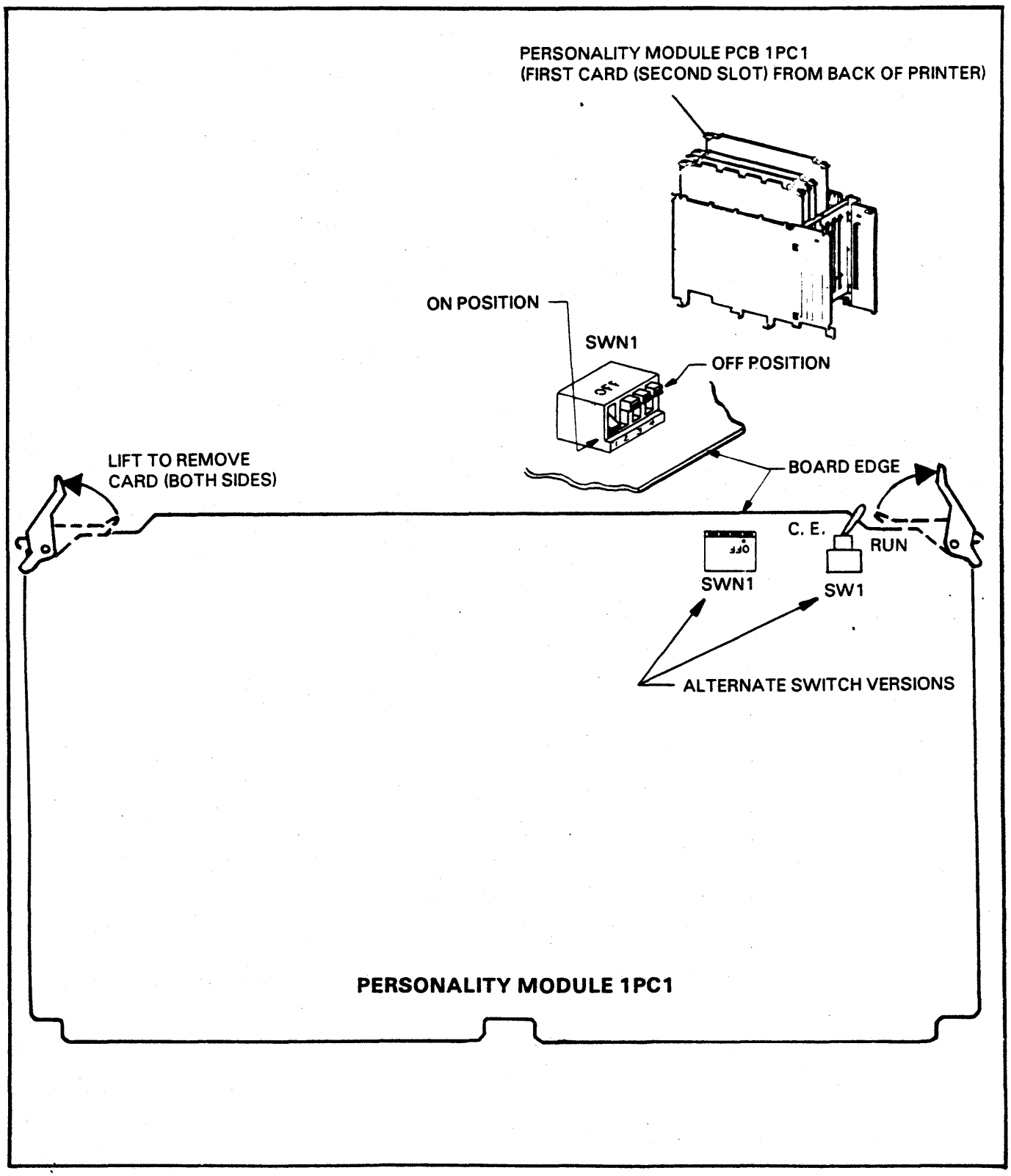

FIGURE 2-1. PERSONALITY MODULE (1PC1) FACTORY SWITCH SETTINGS.

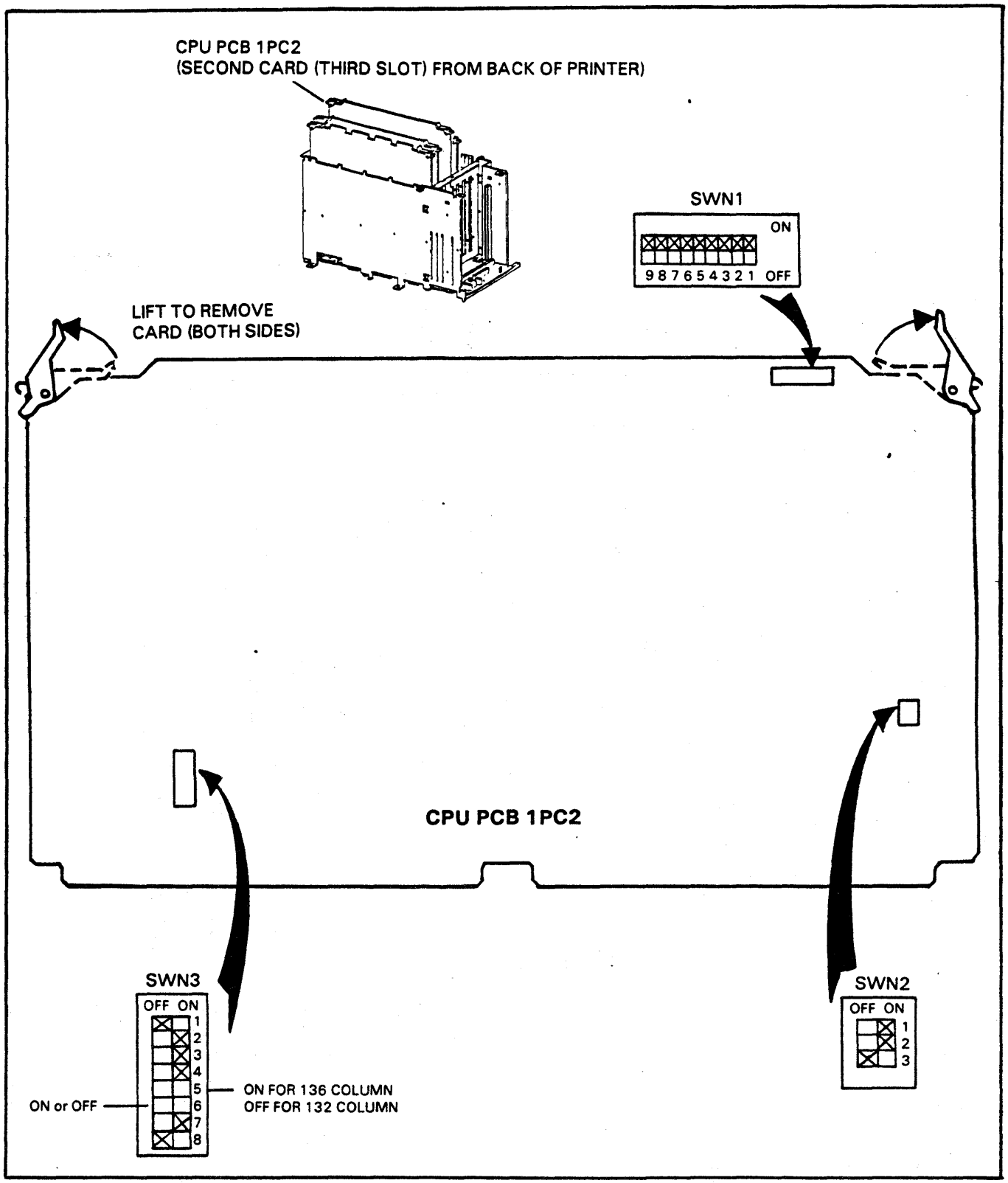

FIGURE 2-2. CPU (1PC2) FACTORY SWITCH SETTINGS

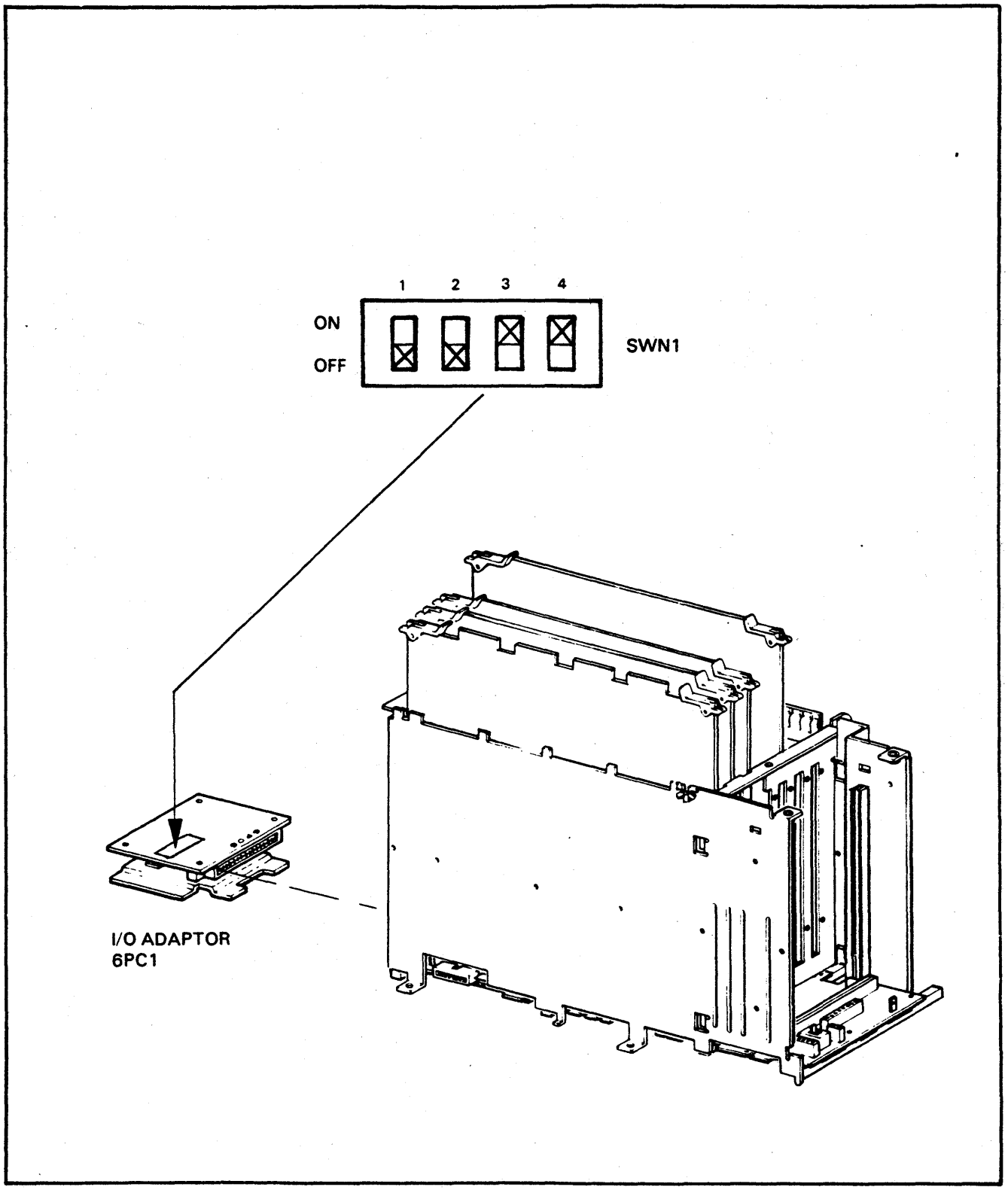

FIGURE 2-3. I/O ADAPTOR (6PC1) FACTORY SWITCH SETTINGS.

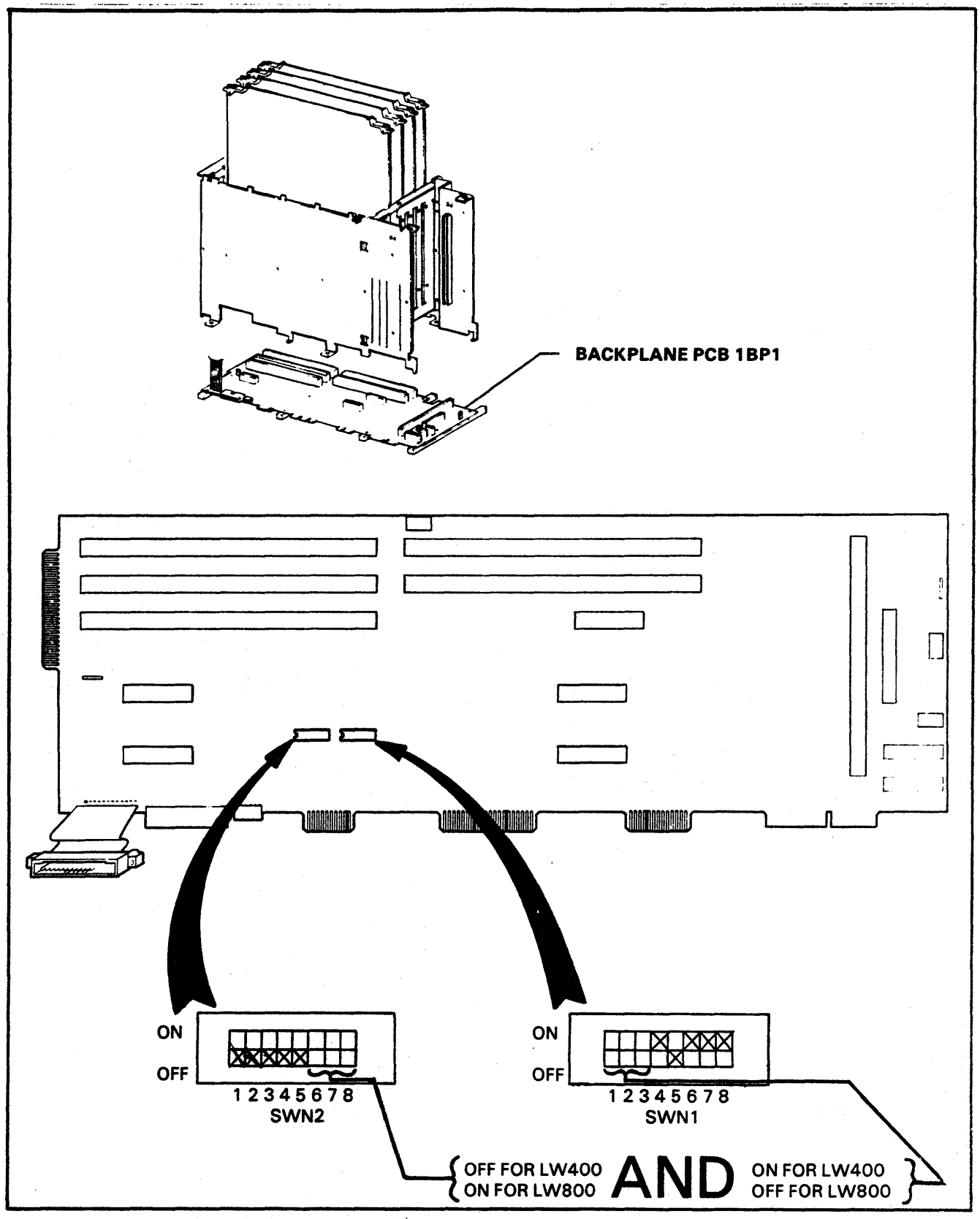

FIGURE 2-4. BACKPLANE (1BP1) FACTORY SWITCH SETTINGS (TWO SWITCH VERSION)

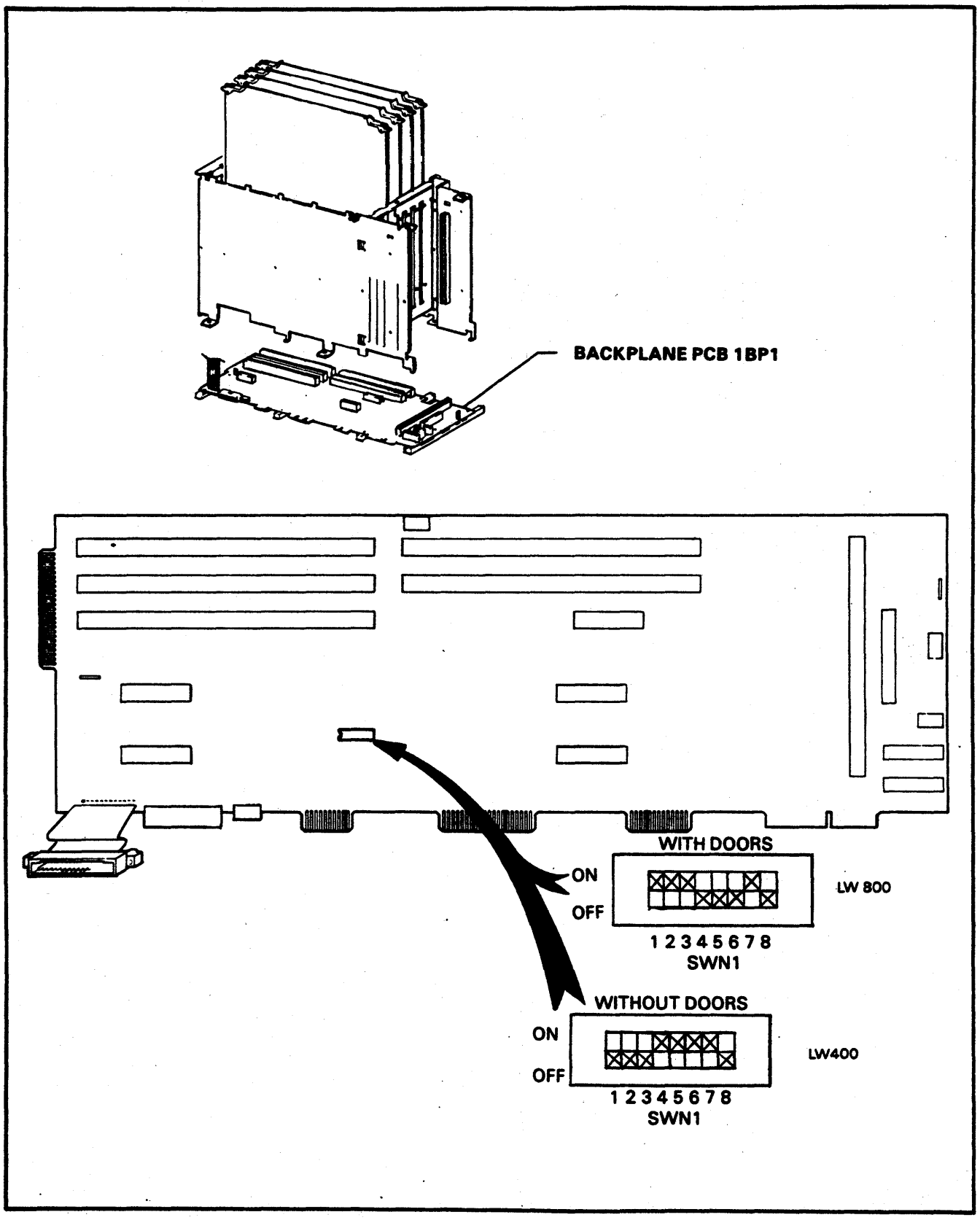

FIGURE 2-5. BACKPLANE (1BP1) FACTORY SWITCH SETTINGS (SINGLE SWITCH VERSION)

SECTION III
CHOOSING A LOCATION

The important factors to be considered when choosing a location for the printer are environmental, electrical and service access requirements. Ideally a computer room environment is desired. See Table 3-1 for environmental specifications, Table 3-2 for electrical specifications and Figures 3-1 and 3-2 for service access specifications.

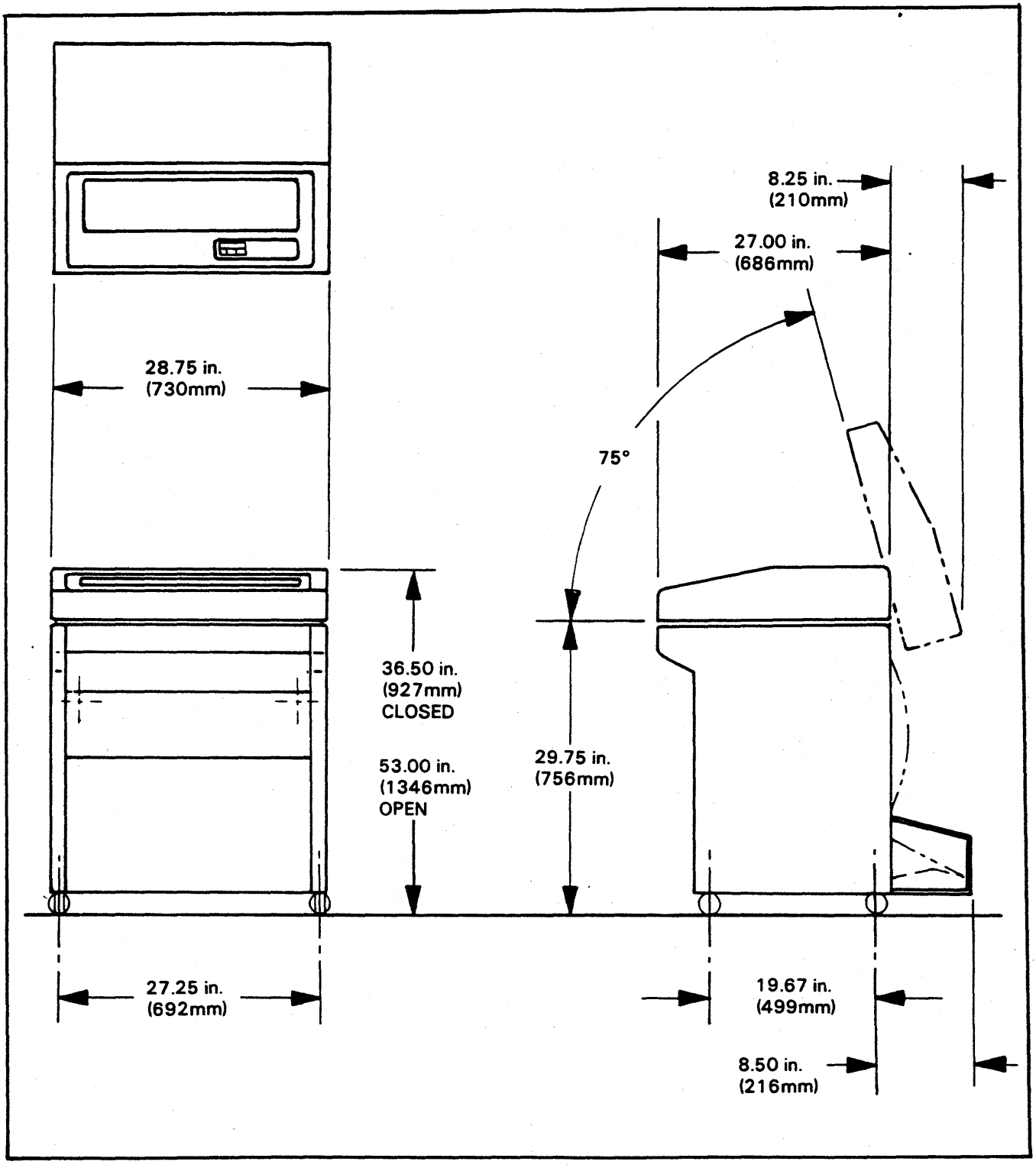

FIGURE 3-1. SERVICE ACCESS SPECIFICATIONS (WITHOUT FRONT DOORS)

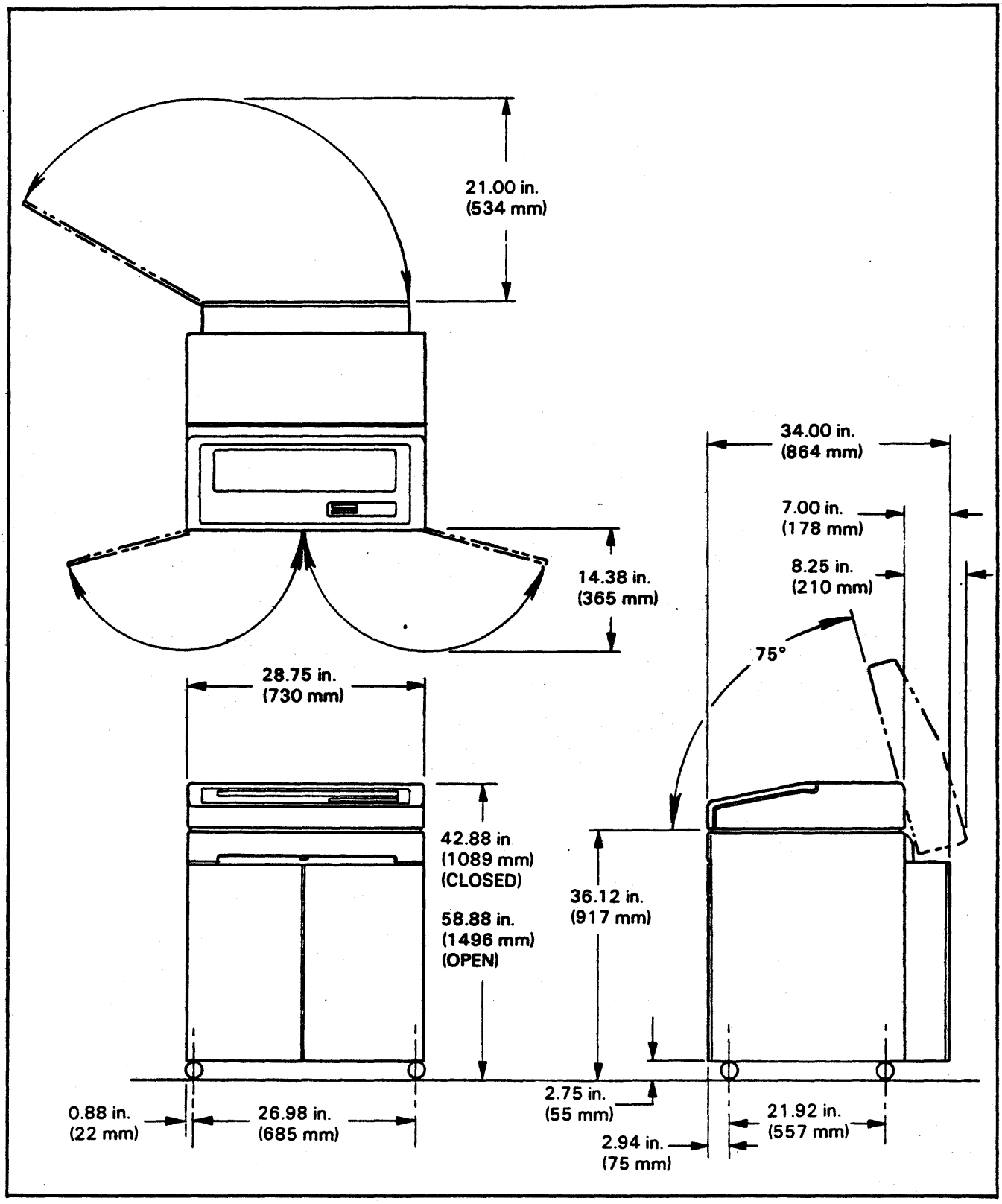

FIGURE 3-2. SERVICE ACCESS SPECIFICATIONS (WITH FRONT DOORS)

TABLE 3-1. ENVIRONMENTAL SPECIFICATIONS

OPERATING TEMPERATURE, HUMIDITY, BAROMETRIC PRESSURE

Temperature Range - Dry Bulb	10°C - 40°C (50°F - 104°F)
Temperature Change (Max)	10°C (18°F) per 60 minutes
Relative Humidity Range	20 - 80%
Humidity Change (Max)	10% per 60 minutes
Dew Point Temperature Restrictions	Maximum 26°C (79°F) Minimum -4°C (25°F)
Barometric Pressure Standard	105 Kilopascals (kpa) 79.5 Kilopascals (kpa) (maximum equivalent altitude 6560 feet or 2000 meters)
High Altitude (Option)	105-Kilopascals (kpa) 69 Kilopascals (kpa) (maximum equivalent altitude 9850 feet or 3000 meters)

A high altitude optional cooling system is required for altitudes between 6560 and 9850 feet or the maximum temperature should be derated from 95°F to 87°F between 6560 to 9850 feet.

Maximum temperature of 104°F applies at altitudes up to 1000 feet. Above this altitude, the maximum temperature is derated linearly to 95°F at 6560 feet.

NON-OPERATING TEMPERATURE, HUMIDITY, BAROMETRIC PRESSURE

Storage (Period Up To 3 Months)	
Temperature Range	-10°C to 50°C (14°F to 122°F)
Temperature Change/Rate	15°C (27°F) per hour maximum
Humidity Range	10 to 90% R.H. non-condensing

TRANSIT (Period Up To One Week)

Temperature Range	-40°C to 60°C -40°F to 140°F
Temperature Change/Rate	20°C (36°F) per hour maximum
Humidity Range	5 to 95% R.H.
Barometric Pressure	105 Kilopascals (kpa) 38 Kilopascals (kpa) (Maximum equivalent altitude 25,000 feet or 7600 meters)

TABLE 3-2. ELECTRICAL SPECIFICATIONS

60 HZ UNIT

a.	Voltage	104 to 128 (nominal 120 VAC RMS)
b.	Phase	Single
c.	Frequency	59.0 to 60.6 Hz
d.	Current	Less than 4.5 amps LW400
		Less than 5.3 amps LW400 (With doors)
		Less than 6.1 amps LW800
		Less than 6.8 amps LW800 (With doors)
e.	VA	575 VA max - LW400
		675 VA max - LW400 (With doors)
		775 VA max - LW800
		870 VA max - LW800 (With doors)

50 HZ UNIT

a.	Voltage	Range 1 - 191 to 235 VAC RMS (Nominal 220 VAC RMS)
		Range 2 - 208 to 256 VAC RMS (Nominal 240 VAC RMS)
b.	Phase	Single
c.	Frequency	49.0 to 50.5 Hz
d.	Current	Range 1 - less than 2.75 amps LW400
		Range 1 - less than 3.3 amps LW400 (With doors)
		Range 1 - less than 3.7 amps LW800
		Range 1 - less than 4.1 amps LW800 (With doors)
		Range 2 - less than 2.5 amps LW400
		Range 2 - less than 3.0 amps LW400 (With doors)
		Range 2 - less than 3.4 amps LW800
		Range 2 - less than 3.9 amps LW800 (With doors)
e.	VA	645 VA max. - LW400
		765 VA max. - LW400 (With doors)
		875 VA max. - LW800
		970 VA max. - LW800 (With doors)

50 HZ/60 HZ UNIT

a.	Voltage	50 Hz - Range 1 - 191 to 235 (nominal 220 VAC RMS)
		50 Hz - Range 2 - 208 to 256 (nominal 240 VAC RMS)
		50 Hz - Range 4 - 87 to 107 (nominal 100 VAC RMS)
		60 Hz - Range 3 - 104 to 128 (nominal 120 VAC RMS)
		60 Hz - Range 5 - 87 to 107 (nominal 100 VAC RMS)
b.	Phase	Single
c.	Frequency	50 Hz - 49.0 to 50.5 Hz
		60 Hz - 59.0 to 60.6 Hz
d.	Current	50 Hz - Range 1 less than 2.75 amps LW400
		Range 1 less than 3.3 amps LW400 (With doors)
		Range 1 less than 3.7 amps LW800
		Range 1 less than 4.1 amps LW800 (With doors)
		Range 2 less than 2.5 amps LW400
		Range 2 less than 3.0 amps LW400 (With doors)
		Range 2 less than 3.4 amps LW800
		Range 2 less than 3.9 amps LW800 (With doors)
		Range 4 less than 6.0 amps LW400
		Range 4 less than 7.1 amps LW400 (With doors)
		Range 4 less than 8.0 amps LW800
		60 Hz - Range 3 less than 4.5 amps LW400
		Range 3 less than 5.3 amps LW400 (With doors)
		Range 3 less than 6.1 amps LW800
		Range 3 less than 6.9 amps LW800 (With doors)
		Range 5 less then 5.25 amps LW400
		Range 4 & 5 less then 6.2 amps LW400 (With doors)
		Range 4 & 5 less then 7.25 amps LW800
		Range 4 & 5 less then 8.0 amps LW800 (With doors)
e.	VA	575 VA max - 60 Hz LW400
		675 VA max - 60 Hz LW400 (With doors)
		645 VA max - 50 Hz LW400
		765 VA max - 50 Hz LW400 (With doors)
		775 VA max. - 60 Hz LW800
		870 VA max. - 60 Hz LW800 (With doors)
		875 VA max. - 50 Hz LW800
		970 VA max. - 50 Hz LW800 (With doors)

SECTION IV
INPUT POWER CONVERSIONS

The printer comes from the factory specifically wired for your application. Conversion within the printer from one frequency of operation to another is only available on optional 50/60 Hz units. The conversion requires reprogramming the ac power board plug for the required configuration if the unit is equipped with a universal programming board (4PC1) as shown in Figure 4-1, or by repositioning fast-on terminal connectors to new positions on a terminal strip as shown in Figure 4-2, and changing the 50 HZ or 60 HZ band pulley. 60 HZ units come equipped with a power cord and is terminated with a non-locking 3 prong plug, 50 HZ units come equipped with a power cord which is terminated without a plug at the wall plug end. Refer to Figure 4-1 for input power frequency modifications for early units with a universal programming board. Refer to Figure 4-2 for input power frequency modifications for units with a terminal strip. The extra 50 Hz or 60 Hz band pulley is stored on early units, in an accessory box. In later units it is stored in the printer's interior and is located beneath the right rear power board cover (as viewed from the front of the printer with the bonnet open).

REMOVE POWER

To change voltage on units equipped with a universal program board, move the voltage selection jumper plug from its present position on 4PC1 J1-J5 to the selected voltage position J1, J2, J3, J4 or J5 (See Figure 4-1).

To change voltage on units equipped with a terminal strip, follow the wiring diagram label instructions above the terminal strip or Figure 4-2.

For frequency and voltage changes perform the following procedure:

REMOVE POWER

1. Change the Band Drive Pulley as follows. Remove the ribbon and print band, refer to the Operator Instruction Cards beneath the printer's bonnet. Remove the band motor flywheel by removing the nut on top. Refer to the Maintenance Manual procedure, Right Band Pulley and Shaft Replacement for a drawing of the parts.

2. Loosen the band motor mounting screws to release belt tension.

3. Pry up on the pulley to remove. Replace the pulley with the other frequency pulley in the location described above. The 50 Hz pulley is larger than the 60 Hz pulley.

4. Position the drive belt on the pulley and perform the Band Drive Belt Adjustment procedure in the Maintenance Manual.

5. Install the flywheel and its nut. Install the band and ribbon. Perform the Band Tracking Adjustment procedure in the Maintenance Manual.

   If the unit is equipped with a universal program board (4PC1), refer to Figure 4-1 and perform steps 6 thru 8. If the unit is equipped with a terminal strip, refer to Figure 4-2 and perform steps 9 thru 11.

6. Move the frequency plug to the correct frequency position on 4PC1 J9 (50 Hz), J10 (60 Hz).

7. Change the transformer cables for 50 and 60 Hz on the backplane board 1BP1-J9 with the unused cable plugged into the storage location on 4PC1.

8. Move the voltage selection jumper plug on 4PC1 to the correct voltage position J1, J2, J3, J4, or J5.

9. Change the transformer cables, P9-60HZ (whichever frequency is desired) on backplane board 1BP1-J9.

10. Move the fast-on terminal connectors to new positions on the terminal strip. Refer to the wiring diagram label above the terminal strip or Figure 4-2.

11. For 100VAC, 120 VAC, 220 VAC (60HZ or 50HZ), 1BP1-P8/P14 should be plugged into 1BP1-J8. For 240 VAC (50HZ), 1BP1-P8/P14 should be plugged into 1BP1-J14.

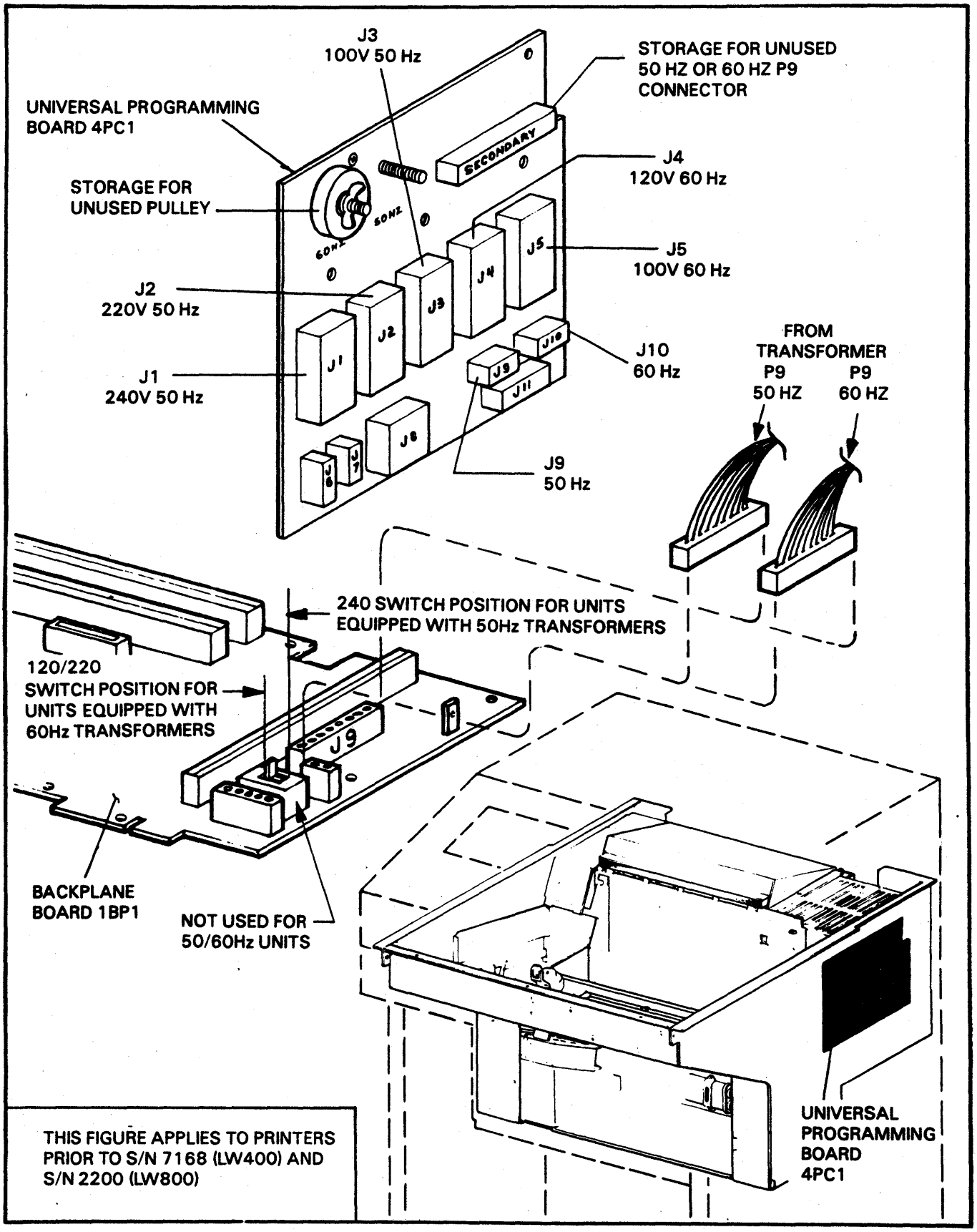

FIGURE 4- . INPUT POWER/FREQUENCY MODIFICATIONS (EARLY UNITS)

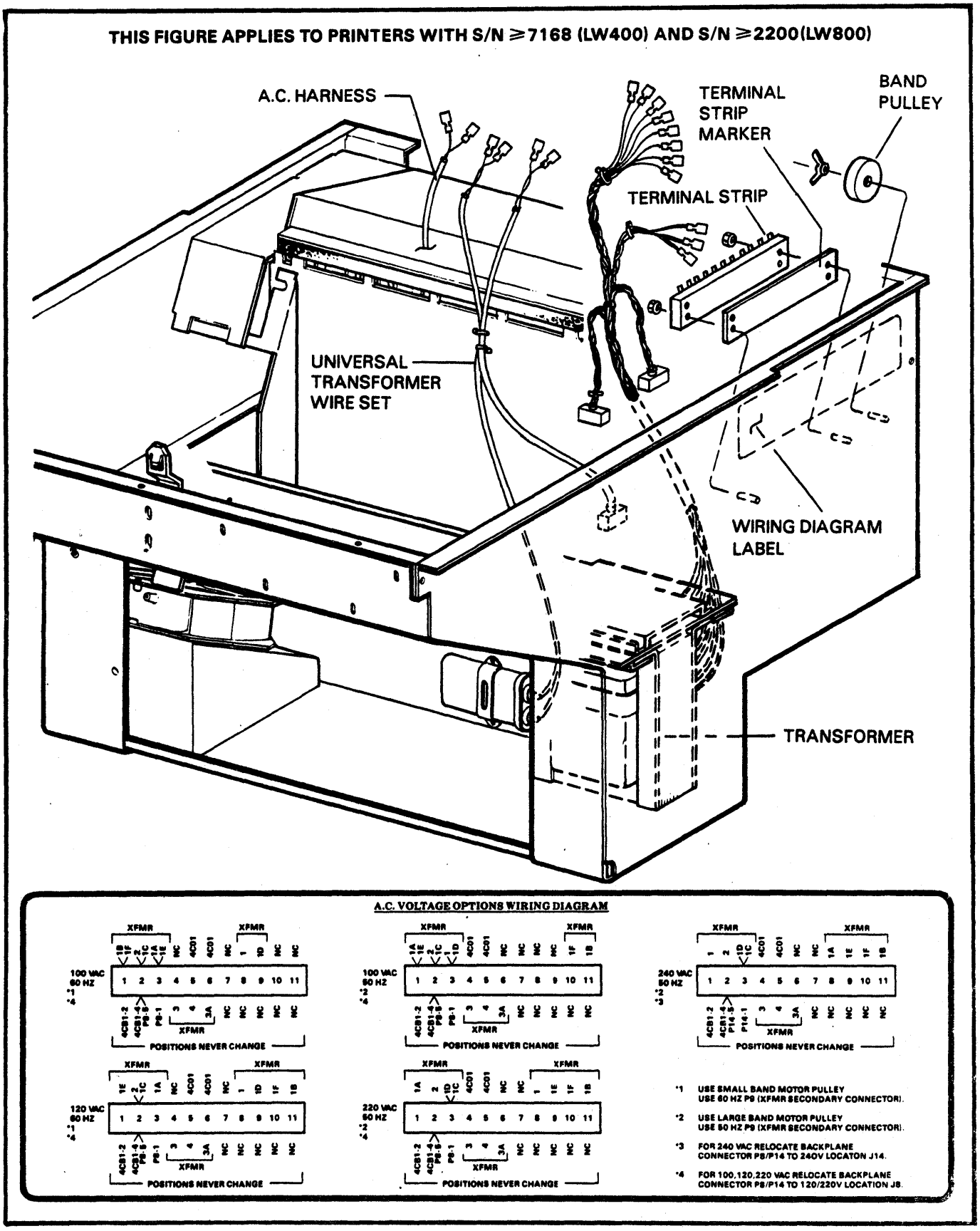

FIGURE 4-2. INPUT POWER/FREQUENCY MODIFICATIONS

SECTION V
INTERFACE SIGNALS

This section describes the interface signals associated with this interface. Note that RS-449 systems may require special connector adaptors when used in RS-232 installations.

Clear to Send (CTS) (To Printer)

After the host has received the Request to Send from the printer and is capable of accepting a transfer from the printer, it will set the Clear to Send line to space (0) ON and hold it on as long as it is capable of accepting data. The printer may also be programmed to internally set CTS to a constant ON condition.

Data Set Ready (DSR) (To Printer)

Signals in this circuit are used to indicate the status of the local host data set. The mark (1) OFF condition is an indication that the printer is to disregard signals appearing on the Receive Data Line. The space (0) ON condition indicates that the data set is in a ready condition. This signal can be programmed to a constant ON condition at the printer. Any pending status transmission from the printer will be cancelled if this line is OFF.

Data Terminal Ready (DTR) (From Printer)

A signal on this line is generated by the printer's communication interface to indicate that it is capable of receiving data.

Local Loopback (From Printer)

This signal will be activated when the operator selects the local loopback test mode and presses the START switch on the Control Panel. The printer will then monitor the test mode signal (Data Communication Equipment) and when active, it will send a sliding alpha ASCII print pattern followed by a Line Feed (LF) command. The printer will then monitor the Received Data Lines for an exact echo of the transmitted data from the local modem. The operator may select this received data to print if required.

Protective Ground (Between Printer and Host)

This conductor is electrically connected to the equipment frame.

NOTE:

SIGNAL GROUND AND PROTECTIVE GROUND CAN BE TIED TOGETHER IN THE PRINTER OR CAN BE SEPARATED BY REMOVAL OF A 100 OHM RESISTOR.

Receive Common (In RS-449 Mode Only)

This line provides the signal return reference for Incoming Call (IC) and Test Mode (TM) signals coming to the printer from the host. It is connected to each differential receiver's reference pin and is not connected to the printer's common signal ground.

Received Data (To Printer)

Serial data (synchronous or asynchronous) signals on this line are generated by the host. This line is to be held in the OFF (marking) condition at all times when the Received Line Signal Detector (RLSD) line is in the OFF (1) condition.

Received Line Signal (Carrier) Detector (RLSD) (To Printer-Optional)

The ON condition of this optional line indicates that the data communication equipment is receiving a signal which meets its suitability criteria. These criteria are established by the data communication equipment manufacturer.

This signal can be programmed to a constant ON condition at the printer.

Receiver Signal Element Timing (To Printer-Optional)

This signal may be optionally selected to be used by the printer to time its received data when in the synchronous mode.

Remote Loopback (From Printer)

This signal will be activated when the operator selects the remote loopback test mode and presses the START switch on the Control Panel. This operation is similar to the local loopback operation except that the host's remote modem will return the loopback data to the printer.

Request to Send (RTS) (From Printer)

This line is used to indicate that the printer has data to be transmitted to the host.

Reverse Channel (From Printer-Optional)

This signal is ON when the printer interface has not detected the following:

When the interface buffer is nearly full (as set by the selectable threshold points) or Data Terminal Ready is OFF. The reverse channel will be OFF for at least 200 MSEC or until the contents of the buffer have been reduced to below nearly empty (as set by the selectable threshold points). Printer speed may be degraded if data is being removed from the interface buffer at a rate which requires that more data be input (Almost Empty threshold) before the 200 ms time has elapsed. This condition can be avoided by setting the threshold points so that there will be sufficient data in the buffer to keep the printer in operation for at least 200 ms.

NOTES:

THIS SIGNAL MAY BE SWITCH SELECTED TO DRIVE EITHER RS-232C PIN 19 (SCA-SECONDARY REQUEST TO SEND) OR PIN 11 (UNASSIGNED).

IN RS-449 MODES THE SRS (SECONDARY REQUEST TO SEND) LINE WILL BE DRIVEN WHEN THE REVERSE CHANNEL OPTION IS SELECTED AND THE OPTIONAL 9 PIN CONNECTOR IS INSTALLED.

THE ACTIVE POLARITY OF THIS SIGNAL MAY BE SELECTED AS AN OPTION SETUP.

Ring Indicator (To Printer-Optional)

The ON condition indicates that a ringing signal is being received on the communication channel.

Send Common (From Printer) (in RS-449 (i.e. RS-422, 423) Modes Only)

This line provides the signal return reference for the Remote Loopback (RL), the Local Loopback (LL) and the Secondary Request to Send (SRS) signals sent to the host from the printer. It is not to be connected to the host's common signal ground.

Signal Ground (Between Printer and Host)

This signal provides the signal reference point for both received and transmitted signals. It is a signal return line only when in the RS-232C mode. It is not the system's protective or frame ground.

Test Mode (To Printer)

This signal is used to respond to either the LL or RL signals from the printer. It indicates that the host system will return any data from the printer back to the printer. The printer will then begin the test. In RS-232 Mode, this line may be jumpered to be held active internally.

Transmitted Data (From Printer)

This serial data (synchronous or asynchronous) line is sent from the printer to the host to send printer status and response data.

Transmitter Signal Element Timing (From Printer-Optional)

This printer supplied signal may be optionally selected to be used by the host to transmit data to the printer when in the synchronous mode. The frequency of this signal is determined by the printer baud rate select circuitry at times one (x 1).

Transmitter Signal Element Timing (To Printer-Optional)

This signal may be optionally selected to be used by the printer to time its transmitted data, when in the synchronous mode.

CONN. PINS	RS-232 SIGNAL	CIRCUIT DIRECTIONS	EIA
5	CLEAR TO SEND	FROM DCE	CB
6	DATA SET READY	FROM DCE	CC
20	DATA TERMINAL READY	TO DCE	CD
18	LOCAL LOOPBACK	TO DCE	
1	PROTECTIVE GND	-	AA
3	RECEIVED DATA	FROM DCE	BB
8	RECEIVED LINE SIGNAL DETECTOR	FROM DCE	CF
17	RECEIVER SIGNAL ELEMENT TIMING	FROM DCE	DD
4	REQUEST TO SEND	TO DCE	CA
11/19	SECONDARY REQUEST TO SEND OR REVERSE CHANNEL	TO DCE	SCA
7	SIGNAL GND	-	AB
22	RING INDICATOR	FROM DCE	CE
25	TEST MODE	FROM DCE	
2	TRANSMITTED DATA	TO DCE	BA
15	TRANSMITTER SIGNAL ELEMENT TIMING (DCE SOURCE)	FROM DCE	DB
24	TRANSMITTER SIGNAL ELEMENT TIMING (DTE SOURCE)	TO DCE	DA

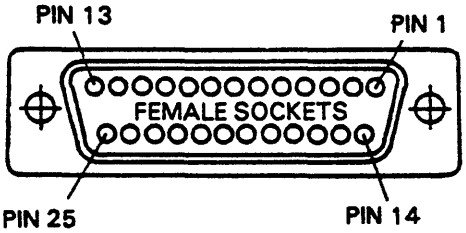

FIGURE 5-1. I/O SIGNALS AND PIN ASSIGNMENTS – RS-232 CONNECTOR

CONNECTOR PINS A	CONNECTOR PINS B	RS-449 SIGNAL	CIRCUIT DIRECTIONS	EIA
9	27	CLEAR TO SEND	FROM DCE	CS
11	29	DATA MODE	FROM DCE	DM
15	20	INCOMING CALL	FROM DCE	IC
10	37	LOCAL LOOPBACK	TO DCE	LL
20	–	RECEIVE COMMON	FROM DCE	RC
8	26	RECEIVE TIMING	FROM DCE	RT
6	24	RECEIVED DATA	FROM DCE	RD
13	31	RECEIVER READY	FROM DCE	RR
14	37	REMOTE LOOPBACK	TO DCE	RL
7	25	REQUEST TO SEND	TO DCE	RS
7*	9*	SECONDARY REQUEST TO SEND	TO DCE	SRS
37	–	SEND COMMON	TO DCE	SC
4	22	SEND DATA	TO DCE	SD
5	23	SEND TIMING	FROM DCE	ST
1	–	SHIELD	–	
19	–	SIGNAL GROUND	–	SG
12	30	TERMINAL READY	TO DCE	TR
17	35	TERMINAL TIMING	TO DCE	TT
18	20	TEST MODE	FROM DCE	TM

*IN OPTIONAL 9 PIN CONNECTOR

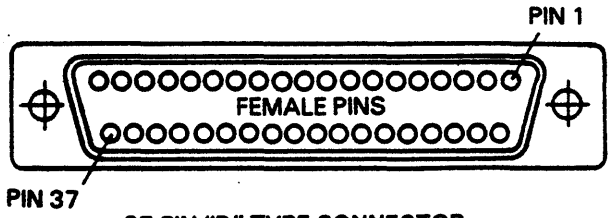

37 PIN "D" TYPE CONNECTOR

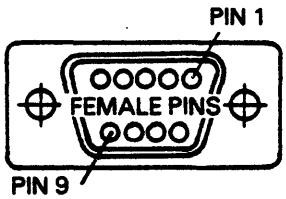

OPTIONAL 9 PIN "D" TYPE CONNECTOR

FIGURE 5-2. I/O SIGNALS AND PIN ASSIGNMENTS – RS-449 CONNECTOR

NOTES

CORPORATE HEADQUARTERS, P.O. BOX O, MINNEAPOLIS, MINN 55440
SALES OFFICES AND SERVICE CENTERS IN MAJOR CITIES THROUGHOUT THE WORLD

LITHO IN U.S

CONTROL DATA