NEW MODULE NEWS
DEC Maynard
2/18/65

6132
TWO MAJORITY GATES

Catalog Item
$171.00

The three-variable majority function (AB+BC+CA+ABC) is the relation for carry or borrow signals in binary adders and subtracters. The 6132 is primarily intended for use as a comparator between flip-flop registers, with the output from the highest-order gate representing the sign of their difference. Propagation delay is only about 10 nanoseconds per stage, allowing large registers to be compared within a short time. See Page 2.10 of the System Module Catalog (C-100) for other comparators.

This module should not be subjected to marginal checking of +10(B) voltage.

INVERTER INPUTS: Each inverter input is equivalent to the input of a 6105 type inverter.

CARRY INPUT: The carry input at pin P is designed to be driven from the pin N output of an adjacent 6132 module. It may also be tied directly to ground or to the -3.0 volt reference provided at pin K. It may be conditioned from a nearby standard inverter whose emitter is grounded if both a 10 ma clamped load and an external silicon clamp to pin J are connected. The clamp to pin J insures that the input will have a lower level that is exactly the voltage required by the analog majority gate. Depending upon the other inputs, loading at the carry input can be up to 5 ma at ground or at -3 volts.

OUTPUTS: Output pins M, N, and R are each equivalent to a standard 15 ma inverter with a 10 ma clamped load connected. If an output or test point is required at the carry connection between the two majority gates, a jumper may be installed to bring this point out to pin S. This output can supply 5 ma at -3 volts in addition to driving the input of the second majority gate.
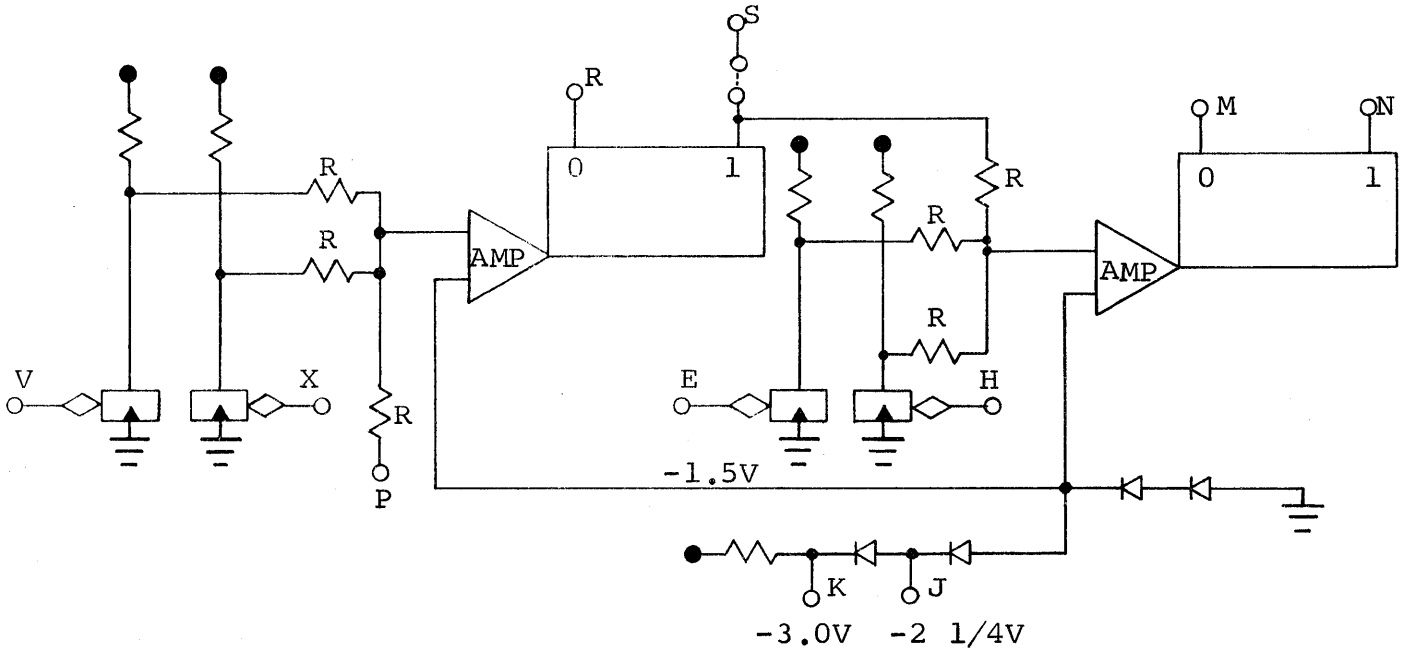
POWER REQUIREMENTS: -15V/150 ma; +10V(A)/0 ma; +10V(B)/125 ma.