PREFACE

The sections of this manual are arranged in the following manner:

Each major assembly has its own individual section.

Input Units

Covers all Motorized Readers and Selectadata Reader.

Output Units

Covers all Motorized Punches.

Special Features

Contains all the features other than standard, plus all the stand assemblies.

Supplemental "SP"

This section, when released, will contain information on part changes that occur.

Obsolete Parts

Will contain drawings of parts which have been obsoleted.

When working with numbers, mistakes can easily be made. Check each number against the Parts Manual. This will enable the Parts Department to give faster service by doing away with the necessity of writing for clarification.

Copyright 1959
FRIDEN, INC.

San Leandro, California

Printed in U. S. A.

Friden, Inc.

HOW TO USE THE MANUAL

Changes made in the mechanical construction of Flexowriters, Justowriters and auxiliary equipment will be announced in the form of Blue Supplement Pages and White Revision Pages.

The Blue Supplement Pages will show new parts or major part changes. These pages will be numbered S.P. 1, S.P. 2, etc. Page S.P. 1 may be revised several times with additional changes until the page is full. The next blue page will be S.P. 2. These pages are to be inserted in the manual in the section provided in accordance with the instructions in the box located near the top of each page.

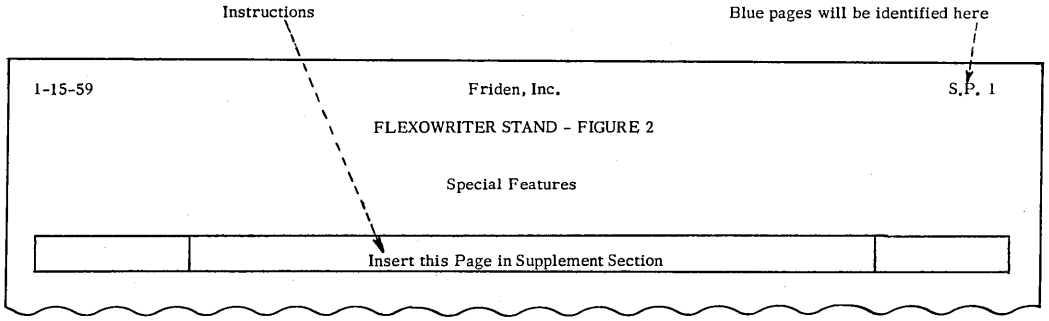

A white page will be a revision to an existing manual page and will have notations on it that refer to the new parts or part changes shown on the blue page. The white pages are to be inserted in accordance with the instructions in the box located near the top of the page.

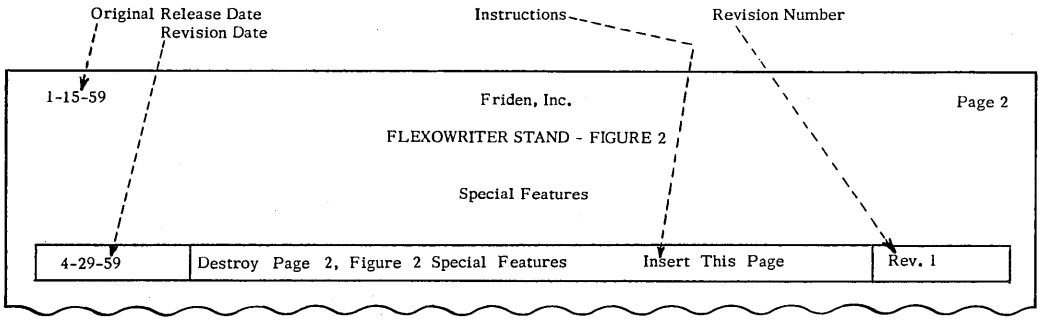

Changes will be like this

On most white pages the parts have a page reference rather than a part number. Refer to the page indicated to locate the part number. This method of identifying allows the part to be shown on more than one page, but numbered on only one.

A part that has a change will be lined out and an S.P. page number shown. Refer to the S.P. page for the change. If another change has been made to the new part on the S.P., the part will be lined out and another S.P. page number will be shown.

This method of keeping the manual up to date will eliminate the need for you to make entries. Your procedure will be: Study the change; Insert the blue page; Remove and destroy the existing white page; Insert the new white page.

N.INT. Abbreviation for Not Interchangeable appears in the blue pages and means the part is not interchangeable with the part it replaces.

INT. Abbreviation for Interchangeable appears in the blue pages and means the part is interchangeable with the part it replaces.

In many cases where the individual parts are not interchangeable, a machine conversion may be made by replacing ALL the parts listed on the change supplement.

FLEXOWRITER-JUSTOWRITER PARTS MANUAL

INDEX

ASSEMBLY	SECTION AND FIGURE NUMBER
Automatic Control by Carriage	Carriage & Rail Assembly Fig. 2
Auxiliary Punch	Output Units - Figs. 4, 5, & 6
Back Space Contact	Electrical Parts - Fig. 5
Back Space Mechanism	Back Space Mechanism - Fig. 1
Base Assembly	Covers - Fig. 2
Base Assembly - Electrical Components	Electrical Parts - Figs. 1 & 1-1
Bell Crank	Keylever, Cam and Type Bar - Fig. 1
Cams:	
Contact Cams	Input Units - Fig. 2, Page 5
	Input Units - Fig. 5, Page 5
	Output Units - Fig. 2, Page 4
Power Roll Cam Assemblies	Keylever, Cam and Type Bar - Fig. 1
Cannon Sockets and Plugs	Electrical Parts - Fig. 1-1
Carbon Ribbon Attachment - Flexowriter	Carbon Ribbon Attachment - Fig. 1
Carbon Ribbon Mechanism - Reproducer	Justowriter - Fig. 5
Carriage Assembly	Carriage & Rail Assembly - Fig. 1
Carriage Return Mechanism	Carriage Return Mechanism - Fig. 1
Carriage Return - Tab Contact	Electrical Parts - Fig. 5
Case Shift & Punch Off - Pos. #5	Electrical Parts - Fig. 6
Charts:	
Contact Panel Button	Keylever, Cam and Type Bar - Fig. 1, Page 2
Flexible Tubing	Electrical Parts - Fig. 14, Page 2
Front Panel Switches - See Contact Panel Button Chart	
Keybutton	Keylever, Cam and Type Bar - Fig. 1, Page 8
Keylever	Keylever, Cam and Type Bar - Fig. 1, Page 6
Relay	Electrical Parts - Fig. 3, Page 3
Code Selector	Code Selector - Fig. 1
Code Selector Bridge	Electrical Parts - Fig. 9-1
Code Selector Contact - See Selector Code Contacts and Selector Bridge Contacts	
Code Translator - See Translator	
Color Shift Mechanism	Color Shift Mechanism - Fig. 1
Computer Assembly - Justowriter	Justowriter - Fig. 2
Connectors - See Cannon Sockets and Plugs, and Winchester Sockets, Plugs, and Hoods	
Contact Cams	Input Units - Fig. 2, Page 5
	Input Units - Fig. 5, Page 5
	Output Units - Fig. 2, Page 4
Contact Location	Electrical Parts - Fig. 4
Contact Operators	Electrical Parts - Fig. 14
Contact Panel - See Front Panel	
Contact Panel Button Chart	Keylever, Cam and Type Bar - Fig. 1, Page 15

FLEXOWRITER-JUSTOWRITER PARTS MANUAL

INDEX (Cont.) 2

ASSEMBLY	SECTION AND FIGURE NUMBER
Contacts:	
Back Space	Electrical Parts - Fig. 5
Carriage Return - Tab	Electrical Parts - Fig. 5
Case Shift and Punch Off - Pos. #5	Electrical Parts - Fig. 6
Keylever Operated - Pos. #3	Electrical Parts - Fig. 7
Parity Check	Electrical Parts - Fig. 11
Selector Bridge	Electrical Parts - Fig. 9
Selector Code	Electrical Parts - Fig. 8
Tape Punch	Electrical Parts - Fig. 10
Tape Reader	Electrical Parts - Figs. 12 and 12-1
Covers - All Models	Cover Section
CRTC & Back Space Contacts	Electrical Parts - Fig. 5
Double Reader - See Reader	
Escapement Magnet Assembly	Escapement Mechanism - Fig. 3
Field Control - See Automatic Control by Carriage	
Flexible Tubing	Electrical Parts - Fig. 14
Frame Assembly - See Translator	
Front Panel	Electrical Parts - Fig. 2
Front Panel Switches Chart - See Contact Panel Button Chart	
Governor - See Tab Governor	
Hole Count Relay - Justowriter	Justowriter - Fig. 3
Keybutton Chart	Keylever, Cam and Type Bar - Fig. 1, Page 8
Keylever, Cam & Type Bar	Keylever, Cam & Type Bar - Fig. 1
Keylever Chart	Keylever, Cam and Type Bar - Fig. 1, Page 6
Keylever Operated Contacts - Pos. #3	Electrical Parts - Fig. 7
Keylock Assembly (new)	Keylever, Cam & Type Bar - Fig. 2
Keylock Assembly (old)	Keylever, Cam & Type Bar - Fig. 1
Label Holders	Special Features - Fig. 10
Main Spring Drum	Tabular Mechanism - Fig. 3
Mono-Spacing	Escapement Mechanism - Fig. 2
Motorized Punch	Output Units - Figs. 1, 2, & 3
Motorized Reader	Input Units - Figs. 1, 2, & 3
P. S. M.	Escapement Mechanism - Fig. 1
Parity Check - See Punch Parity Check	
Permutation Assembly - See Translator	
Pin Feed Platen	Special Features - Fig. 1
Platens	Carriage and Rail Assembly - Fig. 4
Platens - Also See Pin Feed Platen Power Drive Mechanism	Power Drive Mechanism - Fig. 1
Proportional Escapement Mechanism	Escapement Mechanism - Fig. 1
Punch - Also See Motorized Punch	
Punch Contacts - See Tape Punch Contacts	

INDEX (Cont.) 3

ASSEMBLY	SECTION AND FIGURE NUMBER
Punch - Edge Card	Tape Punch - Fig. 2
Punch Parity Check	Electrical Parts - Fig. 11
Punch - Standard	Tape Punch - Fig. 1
Rails	Carriage & Rail Assembly - Fig. 3
Ratchets	Carriage and Rail Assembly - Fig. 4
Reader - Also See Motorized Reader	
Reader - Double - Justowriter	Justowriter - Fig. 4
Reader - Edge Card	Tape Reader - Fig. 2
Reader - Standard	Tape Reader - Fig. 1
Reader - Tab Card	Tape Reader - Fig. 3
Recorder - Justowriter	Justowriter - Fig. 1
Relays and Mounting Brackets	Electrical Parts - Fig. 3
Ribbon Feed Mechanism	Ribbon Feed Mechanism - Fig. 1
Selectadata - Readers	Input Units - Fig. 4, 5, 6, 7, & 8
Selector - See Code Selector	
Selector Bridge Contacts	Electrical Parts - Fig. 9
Selector Code Contacts	Electrical Parts - Fig. 8
Shift Mechanism	Shift Mechanism - Fig. 1
Space Mechanism	Space Mechanism - Fig. 1
Stands	Special Features
Tab Governor	Tabular Mechanism - Fig. 2
Tab Lever & Linkage	Tabular Mechanism - Fig. 1
Tab Parts - Rear Rail	Tabular Mechanism - Fig. 2
Tape Punch - Also See Motorized Punch and Auxiliary Punch	
Tape Punch Contacts	Electrical Parts - Fig. 10
Tape Punch - Edge Card	Tape Punch - Fig. 2
Tape Punch - Standard	Tape Punch - Fig. 1
Tape Reader - Also See Motorized Reader and Selectadata	
Tape Reader Contacts	Electrical Parts - Figs. 12 & 12-1
Tape Reader - Edge Card	Tape Reader - Fig. 2
Tape Reader - Standard	Tape Reader - Fig. 1
Tape Supply Drum	Covers - Fig. 1
Terminals	Electrical Parts - Fig. 14
Tilting Mechanism	Covers - Fig. 1
Translator - Electrical Components	Electrical Parts - Figs. 13 & 13-1
Translator - Frame Assembly	Code Translator - Fig. 2
Translator Permutation Assembly	Code Translator - Fig. 1
Type Bar Segment and Guide Assembly	Keylever, Cam and Type Bar Fig. 1
Unwinders	Special Features
Winchester Sockets, Plugs, and Hoods	Electrical Parts - Fig. 1-1
Winders	Special Features
Wires	Electrical Parts - Fig. 14

PARTS LIST

FRIDEN

FLEXOWRITER-JUSTOWRITER

POWER DRIVE MECHANISM

Figure 1-Power Drive Mechanism

FRIDEN, INC.
HOME OFFICE: SAN LEANDRO, CALIFORNIA
SALES AND SERVICE THROUGHOUT WORLD

Printed in U. S. A.

POWER DRIVE MECHANISM - FIGURE 1

Power Drive Mechanism

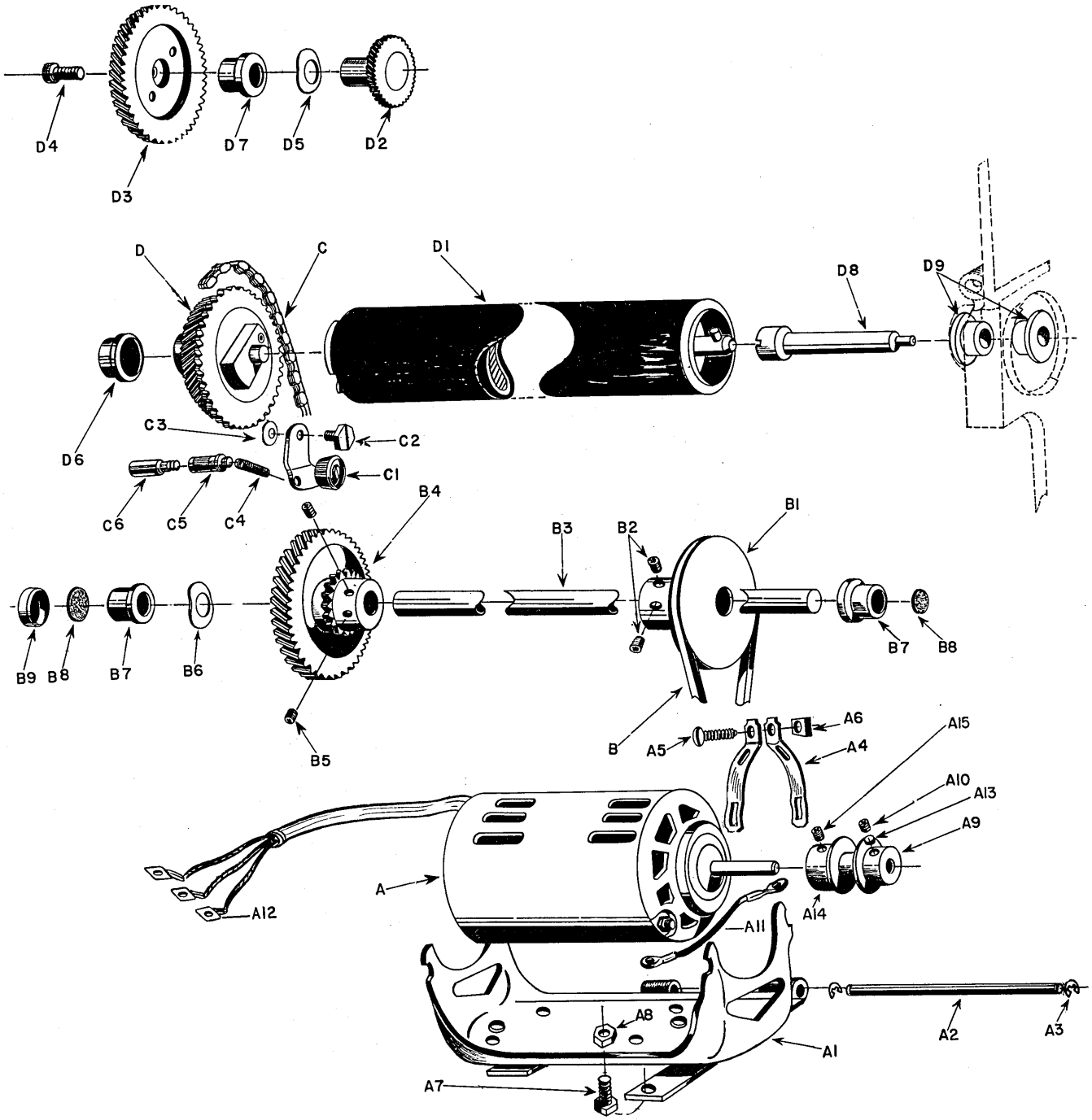

POWER DRIVE MECHANISM - FIGURE 1

Power Drive Mechanism

Ref. No.	Part No.	Part Name
A	1055491	Motor, 110 V.A.C. 50/60 Cycle
A	1055645	Motor, D.C.
A1	1057338	Motor Bracket
A2	1053698	Motor Mount Shaft
A3	1092125	Clip
A4	1041471	Motor Mount Clamp
A5	1041472	Clamp Screw
A6	1041473	Nut
A7	1040420	Motor Lock Screw
A8	11598	Nut
A9	1055591	Adjustable Pulley (Small End)
A9	1055964	Adjustable Pulley (Small End) Cog Type
A10	165556	Set Screw for mounting A9
A11	1054718	Ground Lead Assembly
A12	1061389	Terminal (Furnished with 1055491)
A13	308014	Set Screw Insert for A10
A14	1055590	Adjustable Pulley (Large End)
A15	75533	Set Screw for mounting A14
B	1053762	Motor Drive Belt (60 cycle)
B	1056183	Motor Drive Belt (50 cycle)
B	1055943	Motor Drive Belt Cog (60 cycle)
B1	1053756	Drive Shaft Pulley (60 cycle)
B1	1056182	Drive Shaft Pulley (50 cycle)
B1	1056884	Drive Shaft Pulley, Cog Type
B2	123780	Set Screw
B3	1053755	Power Drive Shaft
B4	1054900	Sprocket (No Punch)
B4	1056136	Gear, Sprocket & Hub (853 RPM)
B4	1057628	Gear, Sprocket & Hub (1000 RPM)
B5	123780	Set Screw
B6	1053766	Shim (Drive Shaft)
B7	1054107	Bushing Drive Shaft
B8	1054447	Oil Felt
B9	1054446	Drive Shaft Cap
C	1053778	Drive Chain
C1	1057254	Idler Assembly Chain
C2	1057263	Idler Mount Screw
C3	1091061	Washer
C4	1040639	Spring
C5	1040075	Spring Pin
C6	1040076	Stud Dowel
D	1054724	Gear, Sprocket & Hub (Standard)
D	1041011	Gear, Sprocket & Hub (1/48in)
D1	1053633	Power Roll
D2	1056137	Intermediate Gear Assembly, Inner (Standard)
D2	1054084	Sprocket (No Reader)

POWER DRIVE MECHANISM - FIGURE 1

Power Drive Mechanism

Ref. No.	Part No.	Part Name
D2	1041015	Intermediate Gear Assembly Inner (1/48in)
D3	1056123	Intermediate Gear Assembly, Outer
D4	1053777	Screw
D5	1053766	Shim Washer
D6	1054108	Bushing
D7	1054106	Bushing
D8	1053655	CR Clutch Shaft
D9	1054105	Bushing

PARTS LIST

FRIDEN
FLEXOWRITER-JUSTOWRITER

CARRIAGE AND RAIL ASSEMBLY

Figure 1-Carriage Assembly

Figure 2-Automatic Control By Carriage

Figure 3-Rails

Figure 4-Platens and Ratchets

FRIDEN, INC.
HOME OFFICE: SAN LEANDRO, CALIFORNIA
SALES AND SERVICE THROUGHOUT WORLD

Printed in U. S. A.

CARRIAGE ASSEMBLY - FIGURE 1

Carriage and Rail Assembly

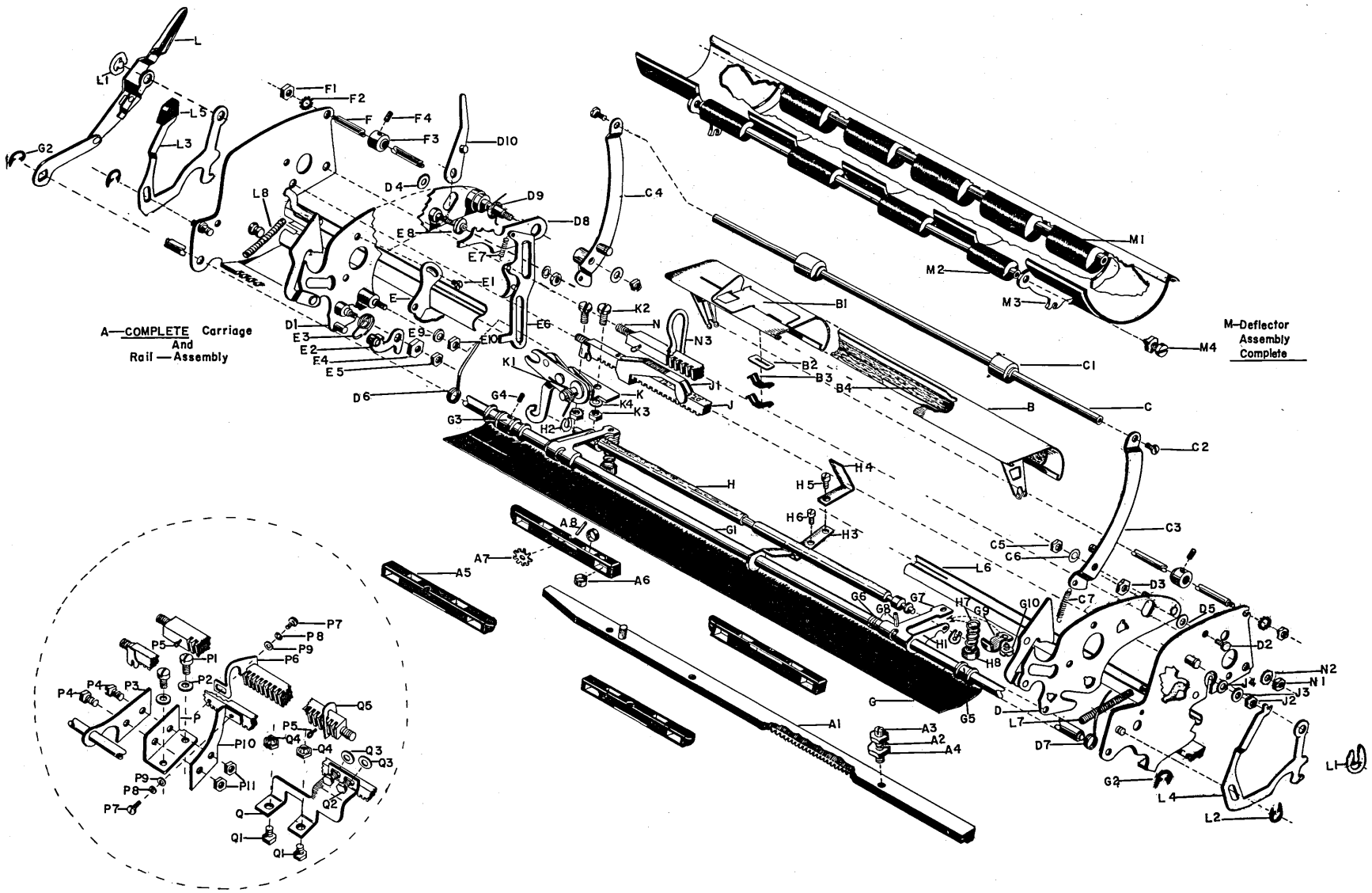

CARRIAGE ASSEMBLY - FIGURE 1

Carriage and Rail Assembly

The Carriage and Rail Assemblies listed below include the Escapement Mechanism but DO NOT include: Platen Assembly, Deflector and Feed Roll Assembly, Paper Table.

All Mono-Spacing Carriage and Rail Assemblies listed have indexing parts for a 33 tooth ratchet.

All 1/32in (escapement) Carriage and Rail Assemblies have indexing parts for a 55 tooth ratchet.

All 1/36in (escapement) Carriage and Rail Assemblies have indexing parts for a 66 tooth ratchet.

All 1/48in (escapement) Carriage and Rail Assemblies have indexing parts for a 44 tooth ratchet.

It is advisable to add the Serial Number of the machine on the Parts Order due to the addition or deletion of parts on a Carriage and Rail Assembly.

* No tab, No Back Space
** No Back Space

Ref. No.	Part No.	Part Name
		Model FL, 12in, 16in, 20in
A	1053780	Carriage & Rail Assembly 12in, 12 Pitch
A	1054741	Carriage & Rail Assembly 12in, 10 Pitch
A	1053781	Carriage & Rail Assembly 12in, 1/32in
A	1056179	Carriage & Rail Assembly 12in, 16 Pitch
A	1057901	Carriage & Rail Assembly 12in, 1/36in
A	1056447	Carriage & Rail Assembly 12in, 1/48in
A	1055352	Carriage & Rail Assembly 16in, 12 Pitch
A	1055391	Carriage & Rail Assembly 16in, 10 Pitch
A	1055973	Carriage & Rail Assembly 16in, 1/32in
A	1041484	Carriage & Rail Assembly 16in, 1/32in
A	1055416	Carriage & Rail Assembly 20in, 12 Pitch
A	1055417	Carriage & Rail Assembly 20in, 10 Pitch
A	1056442	Carriage & Rail Assembly 20in, 16 Pitch
A	1045774	Carriage & Rail Assembly 16in, 16 Pitch
		Model FC 12in, 16in, 20in
A*	1054682	Carriage & Rail Assembly 12in, 10 Pitch (Recorder)
A**	1057380	Carriage & Rail Assembly 12in, 10 Pitch
A	1057623	Carriage & Rail Assembly 16in, 10 Pitch
A	1057855	Carriage & Rail Assembly 20in, 10 Pitch
		Model FG 12in, 16in, 20in
A	1055208	Carriage & Rail Assembly 12in, 12 Pitch
A	1055506	Carriage & Rail Assembly 12in, 10 Pitch
A	1056593	Carriage & Rail Assembly 12in, 1/32in
A	1055782	Carriage & Rail Assembly 16in, 12 Pitch
A	1056905	Carriage & Rail Assembly 16in, 10 Pitch
A	1057214	Carriage & Rail Assembly 16in, 1/32in
A	1056146	Carriage & Rail Assembly 20in, 12 Pitch
A	1056016	Carriage & Rail Assembly 20in, 10 Pitch

CARRIAGE ASSEMBLY - FIGURE 1

Carriage and Rail Assembly

Ref. No.	Part No.	Part Name
		Model FPC 5
A**	1057380	Carriage & Rail Assembly 12in, 10 Pitch
A	1054741	Carriage & Rail Assembly 12in, 10 Pitch
A	1055391	Carriage & Rail Assembly 16in, 10 Pitch
A**	1057623	Carriage & Rail Assembly 16in, 10 Pitch
A	1055417	Carriage & Rail Assembly 20in, 10 Pitch
A	1057855	Carriage & Rail Assembly 20in, 10 Pitch
		Model FPC 8
A	1053780	Carriage & Rail Assembly 12in, 12 Pitch
A	1054741	Carriage & Rail Assembly 12in, 10 Pitch
A**	1057641	Carriage & Rail Assembly 12in, 12 Pitch
A	1055391	Carriage & Rail Assembly 16in, 10 Pitch
A**	1057623	Carriage & Rail Assembly 16in, 10 Pitch
A**	1057780	Carriage & Rail Assembly 16in, 12 Pitch
A	1055352	Carriage & Rail Assembly 16in, 12 Pitch
A	1055416	Carriage & Rail Assembly 20in, 12 Pitch
		Justowriter Recorder & Recorder-Reproducer
A	1053782	Carriage & Rail Assembly 12in, 1/32in
		Justowriter Reproducer
A	1053783	Carriage & Rail Assembly 12in, 1/32in
A	1056391	Carriage & Rail Assembly 12in, 1/36in
A	1056392	Carriage & Rail Assembly 12in, 1/48in
A	1056626	Carriage & Rail Assembly 16in, 1/32in
A	1043412	Carriage & Rail Assembly 16in, 1/36in
A1	1053785	Escapement Rack, 12in, 12 Pitch
A1	1054683	Escapement Rack, 12in, 10 Pitch
A1	1053862	Escapement Rack, 12in, 1/32in
A1	1056428	Escapement Rack, 12in, 1/36in
A1	1056427	Escapement Rack, 12in, 1/48in
A1	1055387	Escapement Rack, 16in, 12 Pitch
A1	1055389	Escapement Rack, 16in, 10 Pitch
A1	1055978	Escapement Rack, 16in, 1/32in
A1	1041486	Escapement Rack, 16in, 1/36in
A2	1091028	Screw (Adjusting-Escapement Rack)
A3	1091029	Screw
A4	1091030	Nut
A5	1071507	Carriage Truck
A6	1041172	Carriage Truck Roller
A7	1093646	Star Wheel
A8	1091161	Dowel
B	1054978	Paper Table Assembly (Includes B4) 12in (Specify Color)
B	1055577	Paper Table Assembly (Includes B4) 16in (Specify Color)

CARRIAGE ASSEMBLY - FIGURE 1

Carriage and Rail Assembly

Ref. No.	Part No.	Part Name
B	1055783	Paper Table Assembly (Includes B4) 20in(Specify Color)
B1	1072851	Paper Table Gauge
B2	1071666	Paper Table Gauge Friction Plate
B3	1072853	Paper Table Gauge Spring
B4	1053799	Sound Deadener, 12in
B4	1055330	Sound Deadener, 16in
B4	1055503	Sound Deadener, 20in
C	1071518	Paper Bail Shaft, 12in
C	1053883	Paper Bail Shaft, 12in (Justowriter Recorder Only)
C	1071863	Paper Bail Shaft, 16in
C	1071864	Paper Bail Shaft, 20in
C1	1041068	Paper Bail Roll Assembly
C2	1091068	Screw (Bail Shaft - Justowriter Recorder Only)
C2	1090524	Screw (Bail Shaft)
C3	1054412	Paper Bail Lever, R.H.
C3	1053880	Paper Bail Lever, R.H. (Justowriter Recorder Only)
C4	1054413	Paper Bail Lever, L.H.
C4	1053878	Paper Bail Lever L.H. (Justowriter Recorder Only)
C5	1090037	Nut
C6	1091391	Shim (.010in)
C7	1040681	Spring
D	1053787	Platen Guide Plate Assembly, R.H.
D1	1053790	Platen Guide Plate Assembly, L.H.
D2	1053792	Screw (for Platen Guide Plate)
D3	1053793	Nut (Eccentric)
D4	1041264	Washer L.H.
D5	45692	Washer R.H.
D6	1040371	Platen Latch Spring, L.H.
D7	1040370	Platen Latch Spring, R.H.
D8	1000325	Upper Index Pawl Stop (29,33,36,39,40,44,49 Tooth)
D8	100272	Upper Index Pawl Stop (50,51,52,55,57,58 Tooth)
D8	1002273	Upper Index Pawl Stop (44,59,62,66 Tooth)
D8	1076865	Upper Index Pawl Stop (27 Tooth)
D9	1000377	Spring
D10	1071627	Line Space Lever Assembly
E	1071496	Index Pawl Stop (lower)
E1	1090845	Screw
E2	1072875	Detent Arm Assembly (27,48 Tooth)
E2	1076864	Detent Arm Assembly (29,33,38,44,49 Tooth)
E2	1076880	Detent Arm Assembly (36,39,40 Tooth)
E2	1076884	Detent Arm Assembly (50,51,52,57,62,66 Tooth)
E2	1076886	Detent Arm Assembly (55,58,59 Tooth)
E3	1072479	Spring
E4	1040491	Eccentric Nut

CARRIAGE ASSEMBLY - FIGURE 1

Carriage and Rail Assembly

Ref. No.	Part No.	Part Name
E5	1090037	Nut
E6	1073401	Index Pawl Carrier, 27,29,33,36,38,39,40,44,48,49 Tooth
E6	1076862	Index Pawl Carrier, 50,51,52,55,57,58,59,62,66 Tooth
E7	1090529	Spring
E8	1071617	Spacer
E9	1090622	Washer
E10	1090034	Nut
F	1053800	Carriage Tie Rod 12in
F	1054082	Carriage Tie Rod 12in (No tab)
F	1054331	Carriage Tie Rod 12in (Justowriter Recorder)
F	1055073	Carriage Tie Rod 12in (FG - Pica)
F	1055280	Carriage Tie Rod 12in (FG - Elite)
F	1056578	Carriage Tie Rod 12in (FG - PSM)
F	1055348	Carriage Tie Rod 16in
F	1055507	Carriage Tie Rod 20in
F1	1090037	Nut
F2	1090049	Washer
F3	1057666	Collar
F4	165556	Set Screw
G	1054489	Front Paper Guide, Elite, 12in (Specify Color)
G	1054631	Front Paper Guide, Pica, 12in (Specify Color)
G	1054488	Front Paper Guide, P.S.M., 12in (Specify Color)
G	1055578	Front Paper Guide, FG Elite, 12in (Specify Color)
G	1055584	Front Paper Guide, FG Pica, 12in (Specify Color)
G	1056572	Front Paper Guide, FG P.S.M., 12in (Specify Color)
G	1055350	Front Paper Guide, Elite, 16in, L.H. (Specify Color)
G	1055351	Front Paper Guide, Elite, 16in, R.H. (Specify Color)
G	1055375	Front Paper Guide, Pica, 16in, L.H. (Specify Color)
G	1055373	Front Paper Guide, Pica, 16in, R.H. (Specify Color)
G	1055977	Front Paper Guide, P.S.M., 16in, L.H. (Specify Color)
G	1055986	Front Paper Guide, P.S.M., 16in, R.H. (Specify Color)
G	1055780	Front Paper Guide, FG Elite, 16in, L.H. (Specify Color)
G	1055781	Front Paper Guide, FG Elite, 16in, R.H. (Specify Color)
G	1056971	Front Paper Guide, FG Pica, 16in, L.H. (Specify Color)
G	1056972	Front Paper Guide, FG Pica, 16in, R.H. (Specify Color)
G	1057223	Front Paper Guide, FG P.S.M., 16in, L.H. (Specify Color)
G	1057224	Front Paper Guide, FG P.S.M., 16in, R.H. (Specify Color)
G	1055356	Front Paper Guide, Elite, 20in, L.H. (Specify Color)
G	1055357	Front Paper Guide, Elite, 20in, R.H. (Specify Color)
G	1055517	Front Paper Guide, Pica, 20in, L.H. (Specify Color)
G	1055518	Front Paper Guide, Pica, 20in, R.H. (Specify Color)
G	1056143	Front Paper Guide, FG Elite, 20in, L.H. (Specify Color)
G	1056144	Front Paper Guide, FG Elite, 20in, R.H. (Specify Color)
G	1056033	Front Paper Guide, FG Pica, 20in, L.H. (Specify Color)

CARRIAGE ASSEMBLY - FIGURE 1

Carriage and Rail Assembly

Ref. No.	Part No.	Part Name
G	1056034	Front Paper Guide, FG, Pica, 20in, R.H. (Specify Color)
G	1056438	Front Paper Guide, 16 Pitch, 20in, L.H. (Specify Color)
G	1056439	Front Paper Guide, 16 Pitch, 20in, R.H. (Specify Color)
G1	1040602	Actuating Shaft 12in
G1	1040603	Actuating Shaft 16in
G1	1040604	Actuating Shaft 20in
G2	60489	Retaining Clip
G3	1041496	Collar
G4	165556	Set Screw
G5	1070545	Paper Guide Grommet
G6	1056222	Spring
G7	1056190	Feed Roll Lift Arm
G8	1044175	Roll Pin
G9	1100504	Retaining Plate
G10	1040500	Screw
G11	1043391	Spring (L.H.) Front Paper Guide (Not Shown)
G12	1043392	Spring (R.H.) Front Paper Guide (Not Shown) Used to add tension - to improve operation (for service only)
H	1055200	Equalizing Shaft, 12in & 20in
H	1040734	Equalizing Shaft, 16in
H1	1000332	Alignment Arms
H2	1091662	Retainer
H3	1041497	Actuating Shaft Support
H4	1041498	Deflector Stop
H5	1056811	Screw (for H3 & H4)
H6	1090003	Screw (for H3)
H7	1073292	Spring
H8	1041525	Stud
J	1044173	Margin Rack Pin (Must be ordered as a separate part)
J	1040340	Margin Rack, Pica, 12in
J	1040341	Margin Rack, Pica, 16in
J	1040342	Margin Rack, Pica, 20in
J	1040343	Margin Rack, Elite, 12in
J	1040344	Margin Rack, 1/36 & 1/48 Escapement, President, 12in
J	1040345	Margin Rack, Justowriter Reproducer, 12in
J	1040346	Margin Rack, Elite, 16in
J	1040347	Margin Rack, 1/32 Escapement, 16in
J	1040348	Margin Rack, 1/36 Escapement, Justowriter Reproducer, 16in
J	1040349	Margin Rack, Elite, 20in
J	1040350	Margin Rack, 1/32 Flexowriter, 12in
J	1040351	Margin Rack, 1/32 Escapement Justowriter, 12in
J	1040352	Margin Rack, 1/32 Escapement 12 point, Justowriter Recorder, 12in
J	1040353	Margin Rack, 1/32, P.S.M., 16in
J	1040354	Margin Rack, 1/32 Escapement, Justowriter Reproducer, 16in
J	1040355	Margin Rack, 1/32 Flexowriter, 20in

CARRIAGE ASSEMBLY - FIGURE 1

Carriage and Rail Assembly

Ref. No.	Part No.	Part Name
J	1044145	Margin Rack, 5/32 Pitch, 12in
J	1044185	Margin Rack, 5/32 Pitch, 16in
J1	1054478	Margin Stop, Elite, 1/48in, 1/36in
J1	1044869	Margin Stop, 5/32 Pitch
J1	1054687	Margin Stop, Pica
J1	1054480	Margin Stop, 1/32in, 16 Pitch
J2	1042790	Nut
J3	1090534	Spacer
J4	1090240	Washer
K	1040239	Index Hook Lever Assembly
K1	1054746	Index Hook Lever Spring
K2	443	Screw
K3	1090034	Nut
K4	1055719	Washer
L	1071629	Feed Roll Release Lever
L1	60488	Retaining Clip
L2	60489	Retaining Clip
L3	1071650	Carriage Release Lever (L.H.)
L4	1071653	Carriage Release Lever (R.H.)
L5	1042290	Carriage Release Lever Button
L6	1043457	Carriage Universal Bar Assembly, 12in
L6	1055613	Carriage Universal Bar Assembly, 16in
L6	1043458	Carriage Universal Bar Assembly, 20in
L7	1090337	"U" Bar Spring (R.H.)
L8	1090404	"U" Bar Spring (L.H.)
M	1072671	Deflector Assembly Complete, 12in
M	1072668	Deflector Assembly Complete, 16in
M	1072667	Deflector Assembly Complete, 20in
M1	1040999	Feed Roll Assembly, Rear, 12in & 20in
M1	1040998	Feed Roll Assembly, Rear, 16in
M2	1040994	Feed Roll Assembly, Front, 12in & 20in
M2	1040993	Feed Roll Assembly, Front, 16in
M3	1070380	Deflector Pan, 12in
M3	1070585	Deflector Pan, 16in
M3	1070595	Deflector Pan, 20in
M4	1062985	Nut & Screw Assembly
N	1053802	Tabular Rack, Elite, 12in
N	1054743	Tabular Rack, Pica, 12in
N	1053865	Tabular Rack, P.S.M., 12in
N	1056388	Tabular Rack, Justowriter Recorder, 1/32in, 12in
N	1054775	Tabular Rack, Justowriter Reproducer, 1/32in, 12in
N	1056389	Tabular Rack, Justowriter Reproducer, 1/36in, 1/48in, 12in
N	1055344	Tabular Rack, Elite, 16in
N	1055370	Tabular Rack, Pica, 16in

CARRIAGE ASSEMBLY - FIGURE 1

Carriage and Rail Assembly

Ref. No.	Part No.	Part Name
N	1055974	Tabular Rack, P.S.M., 16in
N	1056629	Tabular Rack, Justowriter Reproducer, 1/32in, 16in
N	1055358	Tabular Rack, Elite, 20in
N	1055508	Tabular Rack, Pica, 20in
N	1056433	Tabular Rack, P.S.M., 20in
N	1043413	Tabular Rack, Justowriter Reproducer, 1/36in, 16in
N1	1042790	Nut
N2	1090240	Washer
N3	1054486	Tab Stop
N3	1043388	Tab Stop (for Pica)
P	1065962	Center Support Bracket (for Margin Rack), 16in & 20in
P1	38364	Screw (for P)
P2	1090058	Washer (for P)
P3	1073276	Actuating Shaft Support, 16in & 20in
P4	1043225	Screw (for P3 & P10)
P5	1090290	Cotter Pin
P6	1056128	Tab Rack Center Brace, 20in
P7	2650	Screw (for P6)
P8	1057580	Lockwasher (for P7)
P9	1090222	Washer
P10	1041094	Margin Rack Center Support, Rear 16in & 20in
P11	1090041	Nut (for P4)
Q	1040630	Margin Rack Brace (P.S.M.)
Q1	1043225	Screw (for Q)
Q2	1090968	Screw (for Q)
Q3	1091508	Washer (for Q)
Q4	1055023	Nut (for Q)
Q5	1056479	Final Tab Stop

AUTOMATIC CONTROL BY CARRIAGE - FIGURE 2

Carriage and Rail Assembly

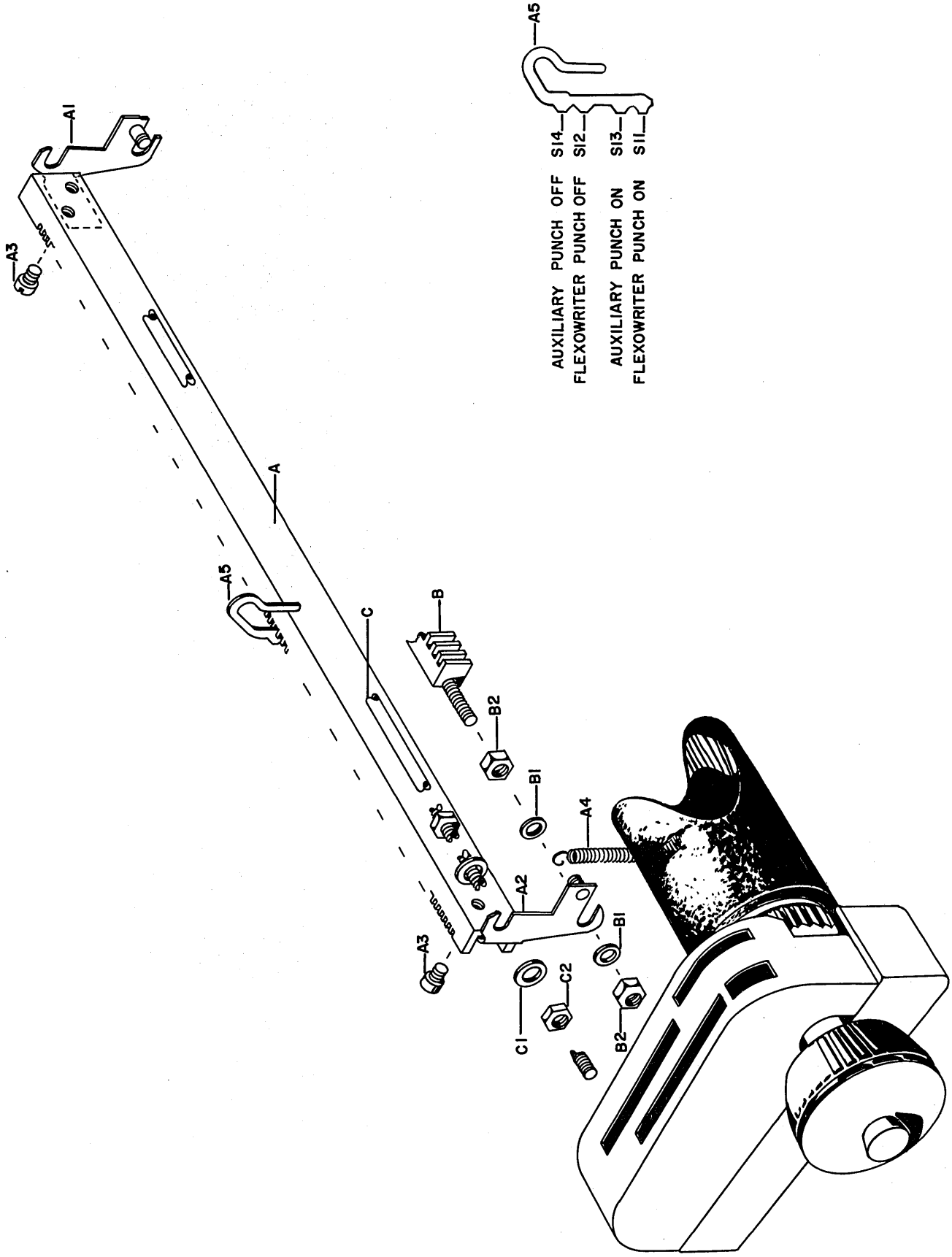

AUTOMATIC CONTROL BY CARRIAGE - FIGURE 2

Carriage and Rail Assembly

Ref. No.	Part No.	Part Name
A	1056209	Control Rack, 12in Pica
A	1056175	Control Rack, 16in Pica
A	1056323	Control Rack, 20in Pica
A	1056208	Control Rack, 12in Elite
A	1056321	Control Rack, 16in Elite
A	1056322	Control Rack, 20in Elite
A1	1056253	Right Hand Mounting Bracket
A2	1056254	Left Hand Mounting Bracket
A3	38364	Screw for Mounting A1 and A2 to A
A4	1040681	Spring
A5	1056201	Control Tab, #S11 for Micro Switch
A5	1056202	Control Tab, #S13 for Micro Switch
A5	1056210	Control Tab, #S12 for Micro Switch
A5	1056211	Control Tab, #S14 for Micro Switch
A5	1045414	Control Tab, #S14, #S12, #S13 for Micro Switch
A5	1045415	Control Tab, #S12, #S13, #S11 for Micro Switch
A5	1045416	Control Tab, #S14, #S12, #S11 for Micro Switch
A5	1045417	Control Tab, #S14, #S13, #S11 for Micro Switch
A5	1045418	Control Tab, #S14, #S12 for Micro Switch
A5	1045419	Control Tab, #S13, #S11 for Micro Switch
A5	1045420	Control Tab, #S14, #S11 for Micro Switch
A5	1045421	Control Tab, #S12, #S13 for Micro Switch
A5	1045422	Control Tab, #S14, #S13 for Micro Switch
A5	1045423	Control Tab, #S12, #S11 for Micro Switch
A5	1056200	Control Tab, #S11, #S13, #S12, #S14, for Micro Switch
B	1056212	Tabular Rack for Control Rack, 12in, Pica
B	1056176	Tabular Rack for Control Rack, 16in, Pica
B	1056325	Tabular Rack for Control Rack, 20in, Pica
B	1056213	Tabular Rack for Control Rack, 12in, Elite
B	1056327	Tabular Rack for Control Rack, 16in, Elite
B	1056326	Tabular Rack for Control Rack, 20in, Elite
B1	1090240	Washer
B2	1042790	Nut
C	1054331	Tie Rod for Control Rack, 12in, Pica and Elite
C	1056251	Tie Rod for Control Rack, 16in, Pica and Elite
C	1056324	Tie Rod for Control Rack, 20in, Pica and Elite
C1	1091121	Washer
C2	1090888	Nut

RAILS - FIGURE 3

Carriage and Rail Assembly

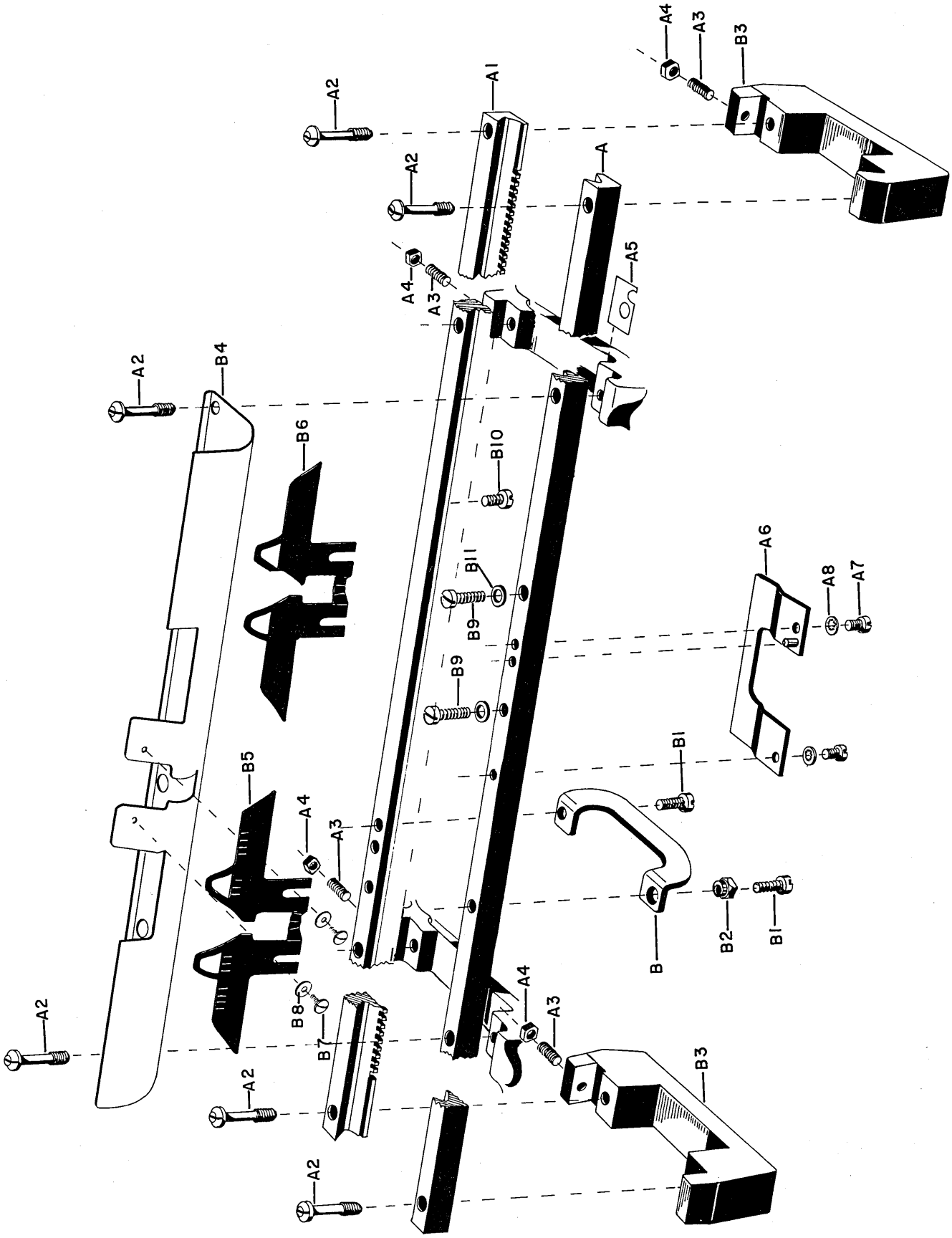

RAILS - FIGURE 3

Carriage and Rail Assembly

Ref. No.	Part No.	Part Name
A	1040617	Front Rail, 12in
A	1040619	Front Rail, 16in
A	1040621	Front Rail, 20in
A1	1040618	Rear Rail, 12in
A1	1040620	Rear Rail, 16in
A1	1040622	Rear Rail, 20in
A2	1042182	Screw (to mount A & A1)
A3	1090600	Screw (adjust-Rear Rail)
A4	1090034	Nut (for A3)
A5	1055127	Shim, .005in
A5	1055128	Shim, .010in
A5	1055129	Shim, .020in
A5	1000474	Shim, .032in
A6	1055600	Final Carriage Stop
A7	1090003	Screw
A8	1090358	Lockwasher
B	1040633	Rail Support
B1	1090000	Screw
B2	1040632	Eccentric Nut
B3	1072967	Rail Brace, 20in
B4	1053726	Front Rail Dust Cover (Specify Color)
B5	1042256	Line Gauge Card Holder, Pica (Specify Color)
B5	1042255	Line Gauge Card Holder, Elite (not shown) (Specify Color)
B6	1042257	Line Gauge Card Holder, P.S.M. (Specify Color)
B6	1016335	Line Gauge Card Holder, Justowriter Model AA (Specify Color)
B7	1091068	Screw
B8	1040585	Washer
B9	1090023	Screw (to mount escapement-front)
B10	1090799	Screw (to mount escapement-rear)
B11	1090049	Washer

PLATENS AND RATCHETS - FIGURE 4

Carriage and Rail Assembly

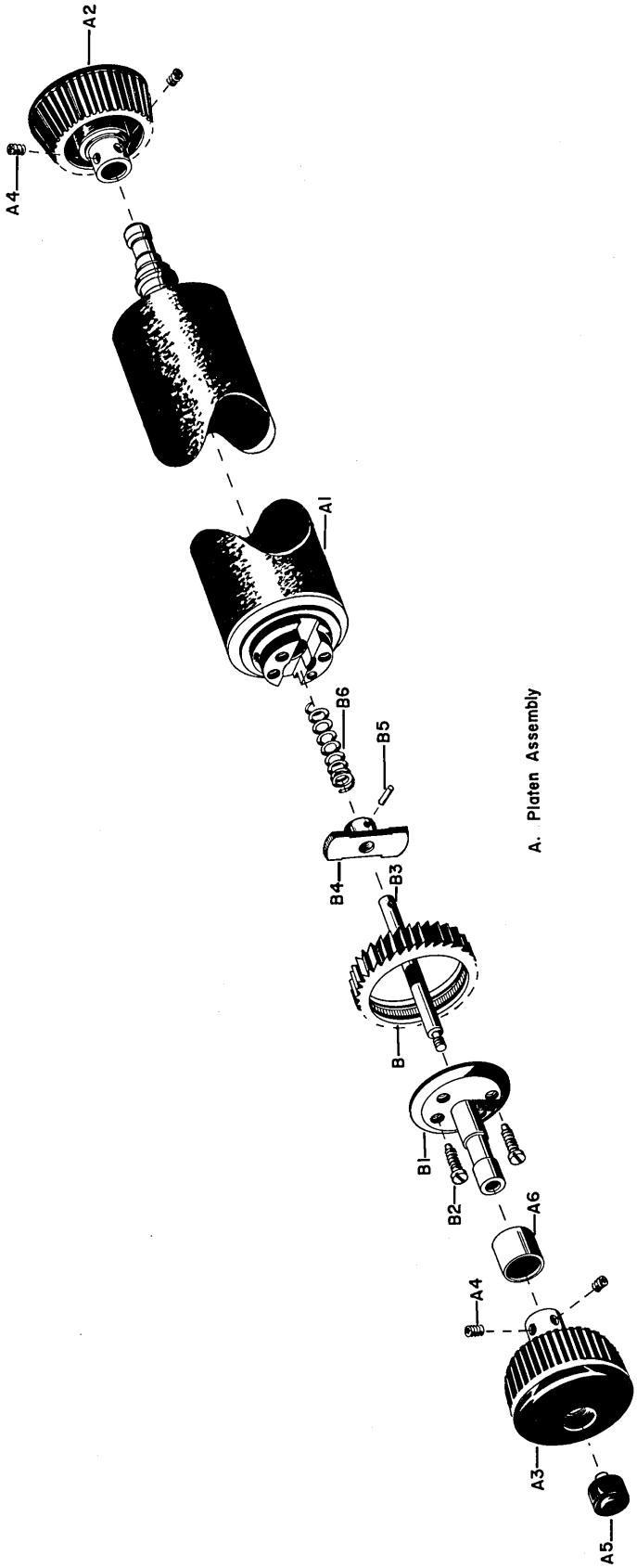

PLATENS AND RATCHETS - FIGURE 4

Carriage and Rail Assembly

Ref. No.	Part No.	Part Name
A	1042574	Platen Assembly 12in, 33T, #2
A	1042575	Platen Assembly 12in, 44T, #2
A	1042576	Platen Assembly 12in, 55T, #2
A	1042577	Platen Assembly 12in, 44T, #8
A	1042578	Platen Assembly 12in, 55T, #8
A	1042586	Platen Assembly 12in, 33T, #4
A	1042587	Platen Assembly 12in, 33T, #7
A	1042653	Platen Assembly 12in, 33T, #9
A	1042661	Platen Assembly 12in, 33T, #1
A	1042617	Platen Assembly 12in, 33T, #3
A	1042662	Platen Assembly 16in, 33T, #1
A	1042581	Platen Assembly 16in, 33T, #2
A	1042588	Platen Assembly 16in, 33T, #4
A	1042580	Platen Assembly 16in, 55T, #2
A	1042582	Platen Assembly 16in, 55T, #8
A	1042654	Platen Assembly 16in, 33T, #9
A	1042589	Platen Assembly 16in, 33T, #7
A	1042618	Platen Assembly 16in, 33T, #3
A	1042584	Platen Assembly 20in, 33T, #2
A	1042590	Platen Assembly 20in, 33T, #4
A	1042591	Platen Assembly 20in, 33T, #7
A	1042655	Platen Assembly 20in, 33T, #9
A	1042663	Platen Assembly 20in, 33T, #1
A	1042619	Platen Assembly 20in, 33T #3
A	1042621	Platen Assembly 20in, 55T, #8
A1	1042628	Platen, Core & Plug Assembly #1, 12in
A1	1042600	Platen, Core & Plug Assembly #2, 12in
A1	1042614	Platen, Core & Plug Assembly #3, 12in
A1	1042641	Platen, Core & Plug Assembly #4, 12in
A1	1042642	Platen, Core & Plug Assembly #7, 12in
A1	1042635	Platen, Core & Plug Assembly #8, 12in
A1	1042650	Platen, Core & Plug Assembly #9, 12in
A1	1042629	Platen, Core & Plug Assembly #1, 16in
A1	1042601	Platen, Core & Plug Assembly #2, 16in
A1	1042615	Platen, Core & Plug Assembly #3, 16in
A1	1042643	Platen, Core & Plug Assembly #4, 16in
A1	1042644	Platen, Core & Plug Assembly #7, 16in
A1	1042636	Platen, Core & Plug Assembly #8, 16in
A1	1042651	Platen, Core & Plug Assembly #9, 16in
A1	1042630	Platen, Core & Plug Assembly #1, 20in
A1	1042602	Platen, Core & Plug Assembly #2, 20in
A1	1042616	Platen, Core & Plug Assembly #3, 20in
A1	1042645	Platen, Core & Plug Assembly #4, 20in
A1	1042646	Platen, Core & Plug Assembly #7, 20in

PLATENS AND RATCHETS - FIGURE 4

Carriage and Rail Assembly

Ref. No.	Part No.	Part Name
A1	1042652	Platen, Core & Plug Assembly #9, 20in
A1	1042620	Platen, Core & Plug Assembly #8, 20in
A2	BX-1042500	R.H. Platen Knob (Blue)
A2	DX-1042500	R.H. Platen Knob (Brown)
A3	BX-1042502	L.H. Platen Knob (Blue)
A3	DX-1042502	L.H. Platen Knob (Brown)
A4	1042567	Set Screw
A5	BX-1042504	Platen Clutch Release Button (Blue)
A5	DX-1042504	Platen Clutch Release Button (Brown)
A6	1042513	Platen Shaft Bushing, L.H.
B	1042527	Platen Ratchet, 27 Tooth
B	1042529	Platen Ratchet, 29 Tooth
B	1042533	Platen Ratchet, 33 Tooth
B	1042536	Platen Ratchet, 36 Tooth
B	1042538	Platen Ratchet, 38 Tooth
B	1042539	Platen Ratchet, 39 Tooth
B	1042540	Platen Ratchet, 40 Tooth
B	1042544	Platen Ratchet, 44 Tooth
B	1042548	Platen Ratchet, 48 Tooth
B	1042549	Platen Ratchet, 49 Tooth
B	1042550	Platen Ratchet, 50 Tooth
B	1042551	Platen Ratchet, 51 Tooth
B	1042552	Platen Ratchet, 52 Tooth
B	1042555	Platen Ratchet, 55 Tooth
B	1042557	Platen Ratchet, 57 Tooth
B	1042558	Platen Ratchet, 58 Tooth
B	1042559	Platen Ratchet, 59 Tooth
B	1042562	Platen Ratchet, 62 Tooth
B	1042566	Platen Ratchet, 66 Tooth
B1	1042510	Clutch Cover & Sleeve Assembly
B2	1042569	Screw
B3	1042516	Platen Ratchet Release Shaft
B4	1042572	Platen Ratchet Driver
B5	1042523	Dowel Pin
B6	1042522	Compression Spring

ESCAPEMENT MAGNET ASSEMBLY (P.S.M.) - FIGURE 3

Escapement Mechanism

Ref. No.	Part No.	Part Name
A1	1092125	Retaining Ring
A2	1054038	Magnet Armature Fulcrum Shaft
A3	1054029	Magnet Armature Fulcrum Bracket
A4	10476	Screw for A3
A5	1091121	Spacer
A6	1054031	Front Magnet Armature
A7	1054034	Center Magnet Armature
A8	1054036	Rear Magnet Armature
A9	1054411	Screw - Non Magnetic for A6, A7, A8
A10	1056260	Lock Nut for A9
A11	1090254	Spacer
B	1055871	Insulator
B1	1020897	Insulator for Terminal Stack
B2	1053323	Terminal
	304311	Terminal-Substitute for B2 on inside of Front Stack (Not Shown)
B3	100133	Screw Insulator for B
B4	173202	Screw
C	1053096	Magnet Coil Assembly
C1	1090033	Screw for Mounting C2
C2	1054030	Magnet Mounting Bracket
C3	38454	Screw to Mount C

PARTS LIST

FRIDEN

FLEXOWRITER-JUSTOWRITER

ESCAPEMENT MECHANISM

Figure 1-P. S. M.

Figure 2-Mono-Spacing

Figure 3-Escapement Magnet Assembly

FRIDEN, INC.
HOME OFFICE: SAN LEANDRO, CALIFORNIA
SALES AND SERVICE THROUGHOUT WORLD

Printed in U. S. A.

P. S. M. - FIGURE 1

Escapement Mechanism

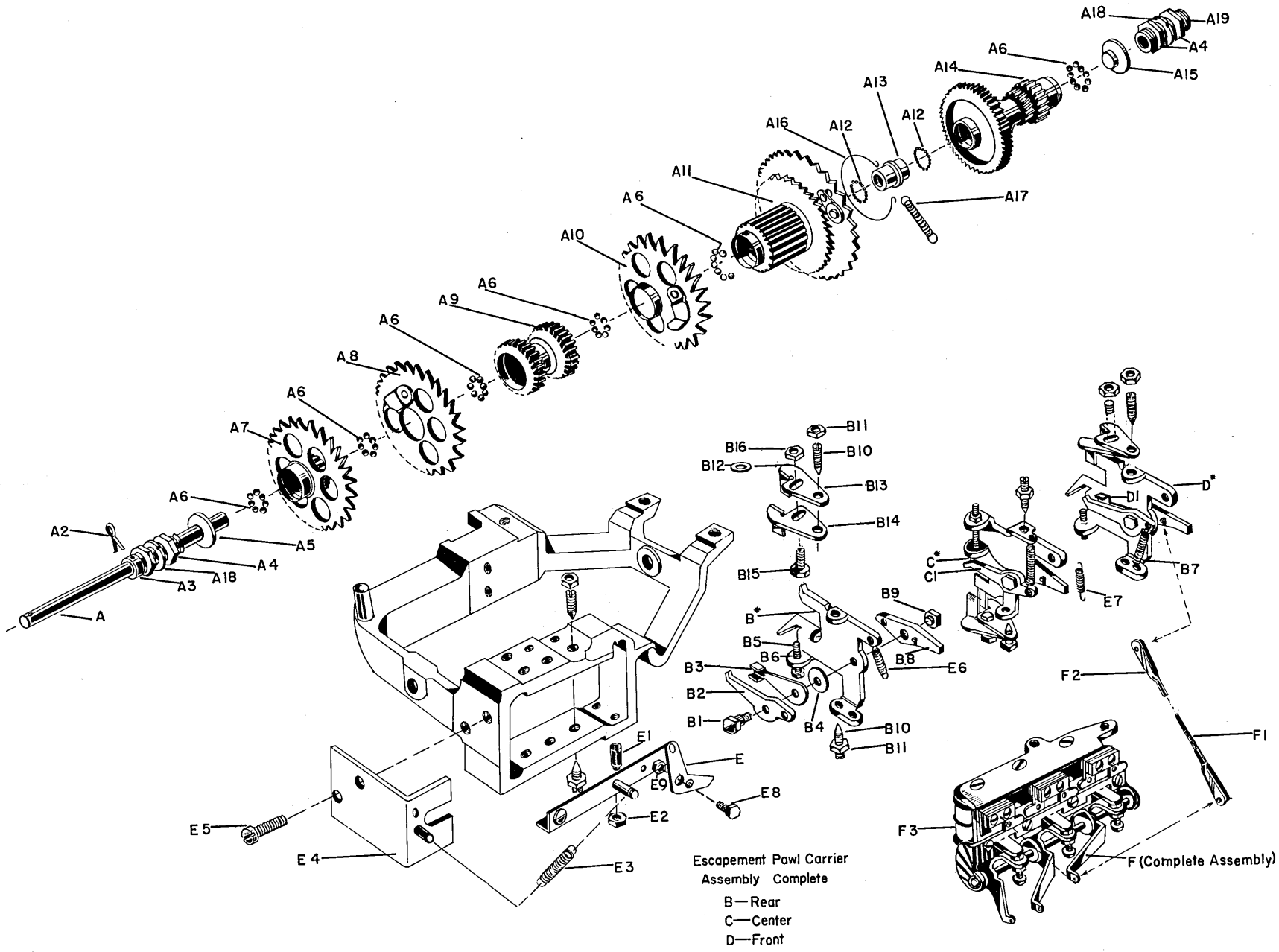

P. S. M. - FIGURE 1

Escapement Mechanism

Ref. No.	Part No.	Part Name
A	1053868	Escapement Mechanism 1/32in
A	1056393	Escapement Mechanism 1/48in
A	1056394	Escapement Mechanism 1/36in
A1	1016004	Shaft, Escapement
A2	1090290	Cotter Pin
A3	1090950	Bushing, Rear
A4	1090952	Nut
A5	1090954	Washer, Thrust
A6	81140	Ball Bearing (1/8in)
A7	1053869	Wheel, Escapement & Gear Assembly (1Unit)
A8	1053871	Wheel, Escapement & Pinion Assembly (2Unit)
A9	1040726	Gear, Escapement (Center)
A10	1053873	Wheel & Pinion Escapement (3Unit)
A11	1040725	Escapement Pinion & CR Release Assembly
A12	1090966	Ball Bearing (1/16in)
A13	1040720	Escapement Shaft Center Bushing
A14	1040719	Escapement Pinion & Ratchet Wheel Assembly 1/32in
A14	1056378	Escapement Pinion & Ratchet Wheel Assembly 1/48in
A14	1056384	Escapement Pinion & Ratchet Wheel Assembly 1/36in
A15	1040717	Ball Race Cone
A16	1016026	Spring
A17	1090962	Spring
A18	127499	Lockwasher
A19	1090951	Bushing, Front
B	1053875	Pawl Carrier Assembly Complete (Rear)
B*	1055003	Escapement Pawl Carrier & Pin Assembly
B1	1090971	Stud
B2	1040834	Escapement Pawl
B3	1053818	Escapement Pawl Stop
B4	1091391	Washer
B4	1090970	Washer
B5	16076	Screw
B6	7341	Nut
B7	138078	Spring
B8	1055131	Pawl Carrier Arm
B9	1090972	Nut
B10	1091033	Pawl Carrier Pivot
B11	1090034	Nut
B12	56722	Lock Washer
B13	1016036	Front Pawl Stop
B14	1016033	Rear Pawl Stop
B15	1090968	Screw
B16	1090037	Nut
C	1053876	Pawl Carrier Assembly Complete (Center)

P. S. M. - FIGURE 1

Escapement Mechanism

Ref. No.	Part No.	Part Name
C*	1055007	Escapement Pawl Carrier & Pin Assembly
		(Parts are the same as B except:)
C1	1040833	Escapement Pawl
D	1054589	Pawl Carrier Assembly Complete (Front)
D*	1055003	Escapement Pawl Carrier & Pin Assembly
		(Parts are the same as B except:)
D1	1016041	Escapement Pawl Stop
E	1053877	Escapement Lever & Slide Assembly (including E1 & E2)
E1	1012466	Eccentric Stud
E2	1090037	Nut (for E1)
E3	56149	Spring
E4	1054886	Bracket Assembly
E5	1090022	Screw (to Mount E4)
E6	1091455	Spring (1 Unit)
E7	1090404	Spring (3 & 2 Unit)
E8	1041295	Stud (to Mount E)
E9	7341	Nut
F	1054028	Escapement Magnet Assembly Complete
F1	1054483	Electrical Trip Link Assembly
F2	1040699	Clevis Link
F3	1053096	Escapement Magnet Assembly

Friden, Inc.

MONO SPACING - FIGURE 2

Escapement Mechanism

MONO SPACING - FIGURE 2

Escapement Mechanism

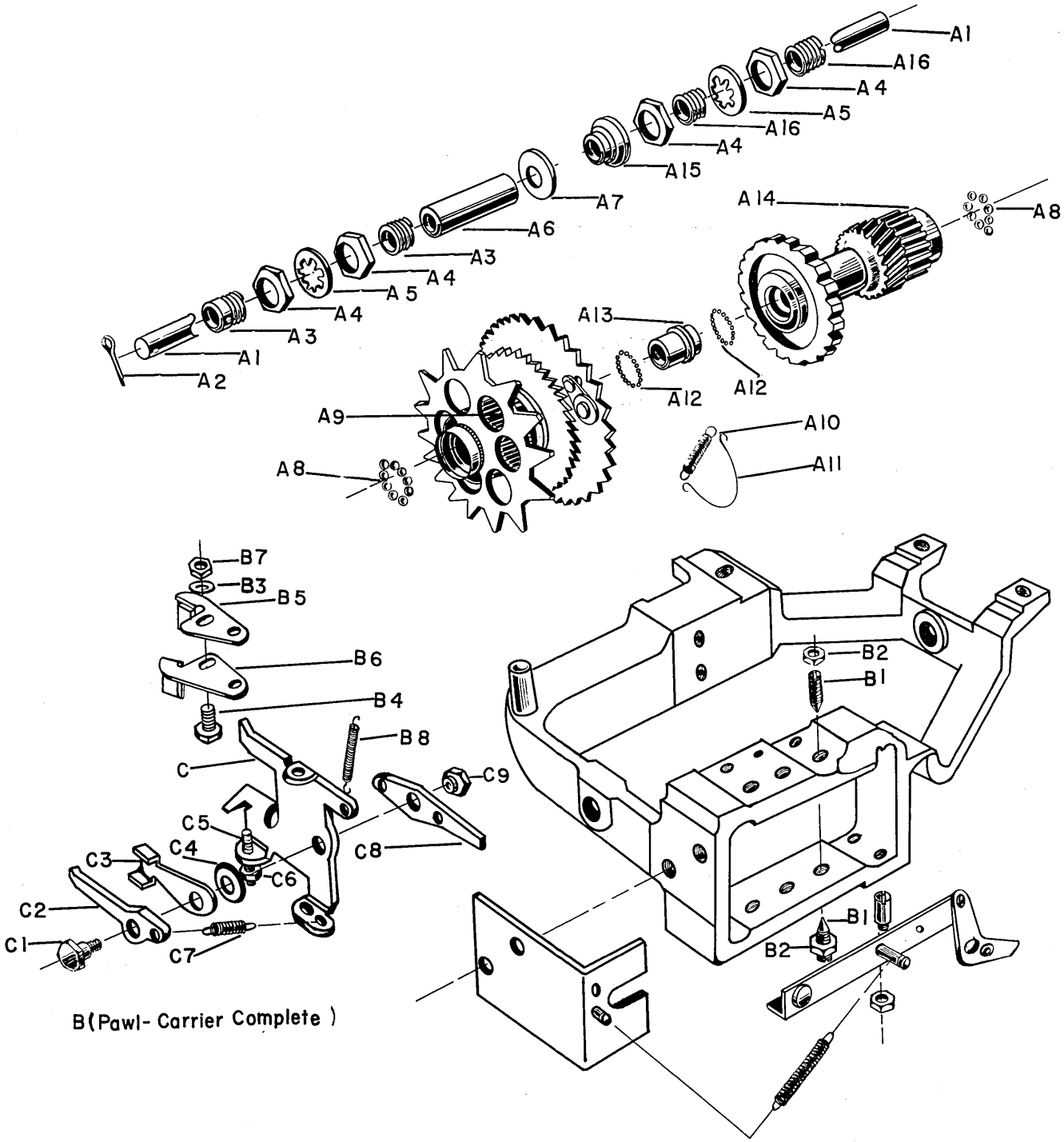

MONO SPACING - FIGURE 2

Escapement Mechanism

Ref. No.	Part No.	Part Name
A	1053812	Escapement Assembly, Elite
A	1054684	Escapement Assembly, Pica
A	1056180	Escapement Assembly, 16 Pitch
A1	1016004	Shaft, Escapement
A2	1090290	Cotter Pin
A3	1090950	Bushing, Rear
A4	1090952	Nut
A5	127499	Washer
A6	1053823	Spacer
A7	1090954	Washer, Thrust
A8	81140	Ball Bearing (1/8in)
A9	1054985	Esc. Wheel & C.R. Ratchet Assembly
A9	1041611	Esc. Wheel & C.R. Ratchet Assembly (CRA)
A10	1090962	Spring
A11	1016026	Spring
A12	1090966	Ball Bearing (1/16in)
A13	1040720	Bushing, Center
A14	1053820	Esc. Pinion & Ratchet Wheel (Elite)
A14	1054685	Esc. Pinion & Ratchet Wheel (Pica)
A14	1056192	Esc. Pinion & Ratchet Wheel (16 Pitch)
A15	1040717	Cone Ball Race
A16	1090951	Bushing, Front
B	1053817	Esc. Pawl Carrier Assembly Complete
B1	1091033	Pivot, Pawl Carrier
B2	1090034	Nut
B3	56722	Lock Washer
B4	1090968	Screw
B5	1016036	Stop, Front Pawl Carrier
B6	1016033	Stop, Rear Pawl Carrier
B7	1090037	Nut
B8	1090404	Spring, Pawl Carrier Return
C	1055003	Escapement Pawl Carrier
C1	1090971	Stud
C2	1040834	Pawl, Escapement
C3	1016041	Stop, Escapement Pawl
C4	1091391	Washer
C4	1090970	Washer
C5	16076	Screw
C6	7341	Nut
C7	138078	Spring
C8	1053355	Arm, Pawl Carrier
C9	1090972	Nut

ESCAPEMENT MAGNET ASSEMBLY (P.S.M.) - FIGURE 3

Escapement Mechanism

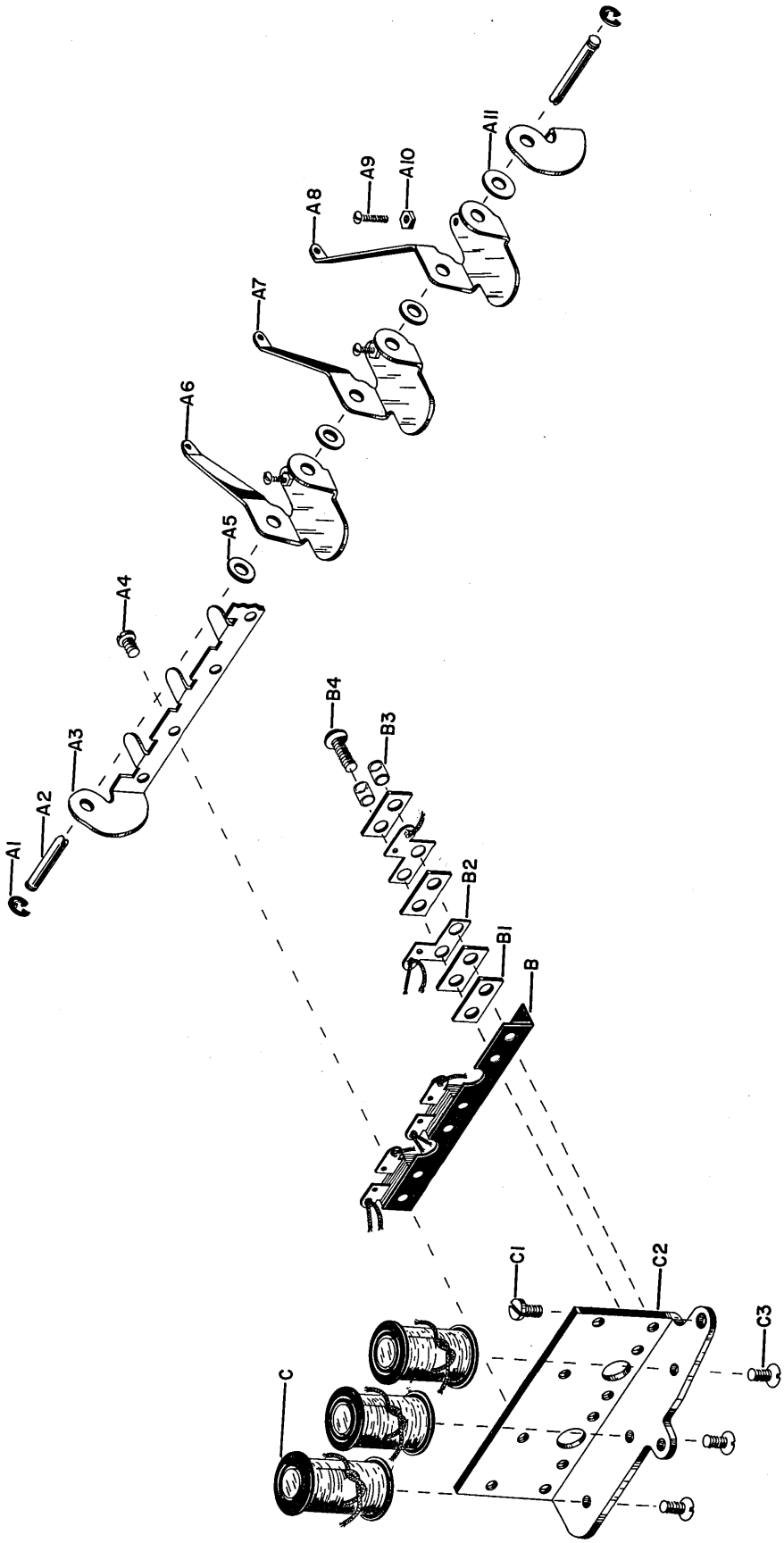

PARTS LIST

FRIDEN
FLEXOWRITER-JUSTOWRITER

KEYLEVER, CAM AND TYPEBAR

Figure 1—Keylever, Cam and Typebar
Figure 2—New Keylock Assembly

FRIDEN, INC.
HOME OFFICE: SAN LEANDRO, CALIFORNIA
SALES AND SERVICE THROUGHOUT WORLD

Printed in U. S. A.

KEYLEVER, CAM AND TYPEBAR - FIGURE 1

Keylever, Cam and Typebar

F TYPEBAR SEGMENT AND GUIDE ASSEMBLY

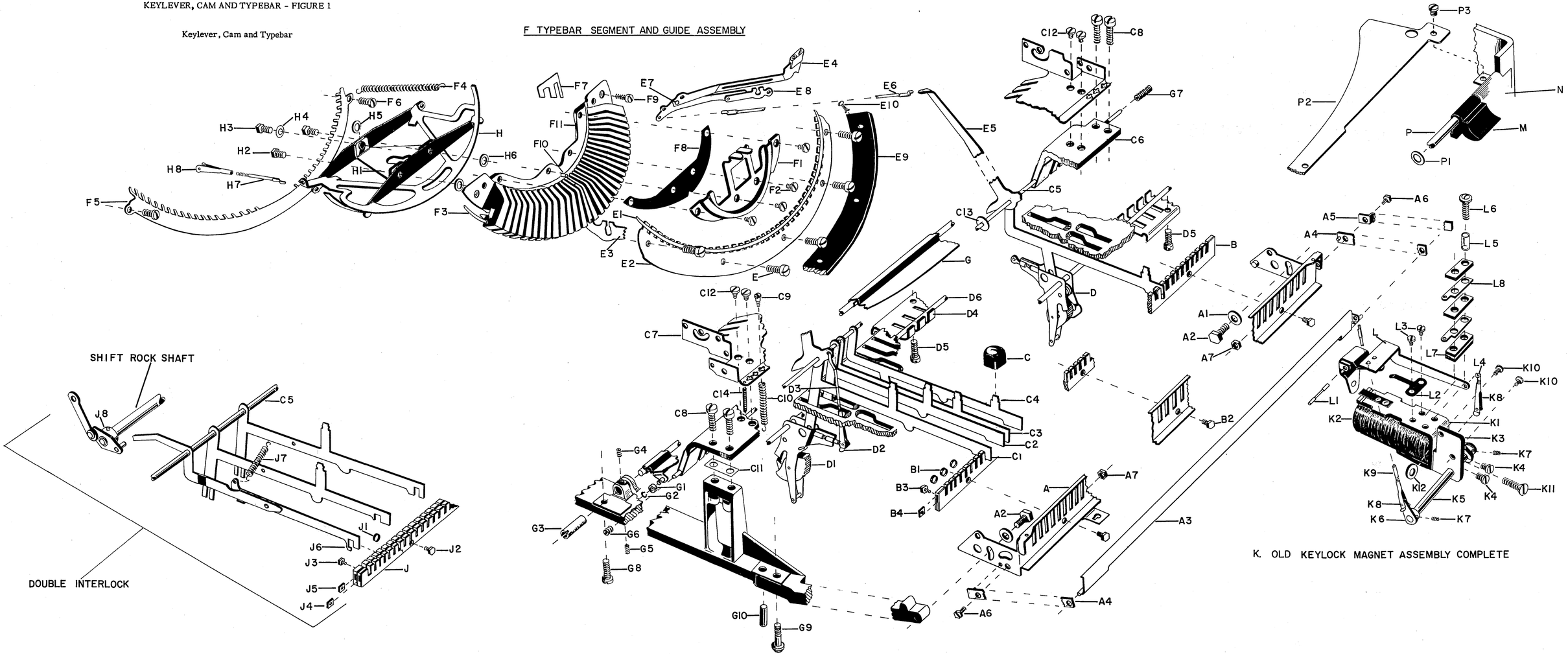

KEYLEVER, CAM AND TYPEBAR - FIGURE 1

Keylever, Cam and Typebar

Ref. No.	Part No.	Part Name
A	1055369	Front Guide Comb
A1	1090047	Washer
A2	1040502	Screw
A3	1053467	Keylever Locking Bail
A4	1052226	Locking Bail Bracket
A5	1052235	Locking Bail Stop
A6	151633	Screw
A7	27073	Nut (for A6)
B	1056713	Interlock Bar & Roller Assembly
B1	1041552	Roller
B2	1091026	Screw (for B)
B3	1056720	Screw (Stop adjusting)
B4	1056719	Roller Stop
C		Keybutton (See Keybutton Chart, Page 8)
C1		Keylever, (See Keylever Chart, Page 6)
C2		Keylever, (See Keylever Chart, Page 6)
C3		Keylever, (See Keylever Chart, Page 6)
C4		Keylever, (See Keylever Chart, Page 6 & 7)
C5	1053491	Bearing Wire, Keylever & Bellcrank
C6	1053493	Keylever Bearing Support
C7	1053532	Keylever Spring Support
C8	1090005	Screw (for C6)
C9	1090272	Screw (for C10)
C10	1090273	Spring (Keylever Tension)
C10		Spring (for Interlock Keylever)
C11	1057194	Shim (for C6)
C11	1057195	Shim (for C6)
C11	1057196	Shim (for C6)
C12	1091515	Screw (for C7)
C13	150109	Washer (Replaces Keylever on Bearing Wire C5)
C14	1053531	Spring
D	1053431	Front Letter Cam
D1	1053432	Rear Letter Cam
D2	1040699	Adjustable Link
D3	1040995	Cam Connecting Link
D4	1053478	Cam Bearing Clamp Plate
D5	1090010	Screw (for D4)
D6	1053491	Cam Bearing Wire
E	1090000	Screw (for E2)
E1	1000038	Toggle Link Fulcrum Wire
E2	1000027	Toggle Bearing Clamp (Standard)
E3	1055176	Toggle Bearing Clamp (P.S.M.)
E3	1000092	Segment Spacing Link

KEYLEVER, CAM AND TYPEBAR - FIGURE 1

Keylever, Cam and Typebar

Ref. No.	Part No.	Part Name
E3	1056813	Segment Spacing Link (used in place of typebar)
E4	1054993	Typebar & Toggle Assembly (Specify: Part Number, Type Style, Character, Position Number, Type Slug Number, Machine Model and Serial Number)
E4		Set of Type & Segment (Specify)
E4		Set of Type without Segment (Specify)
E5	1055065	Bell crank (Specify: Position, Type Style, Character, Machine Serial Number)
E6	1000026	Link (type bar connecting)
E7	1053542	Typebar Rivet
E8	1054897	Typebar Toggle Lever, R.H.
E8	1054896	Typebar Toggle Lever, L.H.
E9	1060707	Typebar Rest
E10	1090500	Typebar Rest Rivet
F	1045999	Typebar Segment and Guide Assembly (Standard Spacing) includes F1, F2, F3, F8, F10 and F11
F	1046000	Typebar Segment and Guide Assembly (PSM Spacing) includes F1, F2, F3, F8, F10 and F11
F1	1040656	Typebar Guide
F2	1091229	Screw (Typebar Guide)
F3	1054429	Typebar Fulcrum Wire
F4	1090341	Spring (for Typebar)
F4	1090161	Spring (heavy)
F5	1016241	Typebar Spring Support
F6	1090003	Screw (for F5)
F7	1000400	Segment Shim
F7	1000401	Segment Shim
F7	1000409	Segment Shim
F8	1070290	Type Guide Shim
F9	1091298	Screw (for F)
F10	1091161	Dowel (for F)
F11	1053549	Typebar Segment (Standard Spacing)
F11	1054140	Typebar Segment (PSM Spacing)
G	1053527	Ribbon Lift Bar
G1	1091998	Bearing
G2	1054348	Clip
G3	1054341	Eccentric bearing (for G)
G4	22797	Set screw (for G3)
G5	205569	Set screw (for G3)
G6	146730	Set screw (for C5 - L.H.)
G7	1054014	Set screw (for C5 - R.H.)
G8	1090005	Screw (To mount power frame)
G9	1042182	Screw (To mount power frame)
G10	1053770	Dowel (To mount power frame)

KEYLEVER, CAM AND TYPEBAR - FIGURE 1

Keylever, Cam and Typebar

Ref. No.	Part No.	Part Name
H	1054330	Universal Bar Assembly
H1	1040972	Universal Bar Support
H2	110775	Screw (for H1)
H3	1090449	Screw (Adjusting Rear Spring)
H4	1090622	Washer (for H3)
H5	1091243	Washer (for H3 - between H & H1)
H6	1090047	Washer (for H2 - between F & H)
H7	1054888	Escapement trip link
H8	1040839	Adjustable link
J	1057502	Interlock Bar & Roller Assembly, D.I.
J1	1041522	Roller
J2	1057498	Screw (for J)
J3	1057497	Screw (stop adjusting)
J4	1056719	Roller Stop (front)
J5	1057496	Roller Stop (rear)
J6	1057503	Interlock Keylever Assembly
J7	1043415	Spring
J8	1057779	Shift Rock Shaft & Lever assembly
K	1053683	Keylock Magnet Assembly Complete (90 Volt)
K	1056241	Keylock Magnet Assembly Complete (48 Volt)
K1	165595	Magnet Yoke Assembly
K2	1053691	Magnet Coil Assembly (90 Volt)
K2	1056101	Magnet Coil Assembly (48 Volt)
K3	1053687	Mounting Bracket for K1
K4	1041999	Screw (to mount K3 to K1)
K5	1053686	Shaft
K6	1053684	Lever Assembly
K7	165556	Set Screw
K8	1040699	Adjustable Link
K9	1016247	Link
K10	1041999	Screw (to mount Keylock Assembly to machine)
K11	19587	Screw (to mount K2 to K1)
K12	115552	Residual (Between K1 & K2)
L	1053689	Magnet Armature Assembly
L1	165594	Pivot pin
L2	1053692	Spring
L3	186636	Screw (to mount L2)
L4	1040997	Link
L5	114045	Insulating Sleeve
L6	173203	Screw
L7	302948	Insulating Block
L8	1053220	Terminal
M		Contact Panel Button (See Panel Button Chart, Page 15)
N		Front Cover Plate Assembly (See Figure 2, Front Panel, Electrical Parts Section)

KEYLEVER, CAM AND TYPEBAR - FIGURE 1

Keylever, Cam and Typebar

Ref. No.	Part No.	Part Name
P	1053708	Rod for Mounting Contact Panel Buttons
P1	45630	Spacer for Contact Panel Buttons
P2	1055872	Cover Plate for Front Cover Plate Contacts
P3	1091409	Screw for Mounting P2 to N

KEYLEVER, CAM AND TYPEBAR - FIGURE 1

Keylever, Cam and Typebar

Keylever Chart

Ref. No.	Part No.	Part Name
C1	1053495	Character, Standard
C1	1057420	Character, Double Interlock
C1	1053508	"Tab", Position "S", Standard
C1	1057436	"Tab", Position "S", Double Interlock
C1	1054291	"3 Unit Space", Position "U", Standard
C1	1057446	"Punch Off", Position "U", Double Interlock
C1	1054420	Character, Position 43, Standard
C1	1054420	"One Unit", Position 43, Standard
C1	1054420	"Color Shift", Position 43, Standard
C1	1057450	Character, Position 43, Double Interlock
C1	1053515	"Back Space", Position "W", Standard
C1	1053515	"Plate Disc", Position "W", Standard
C1	1057442	"On 1 On 2", Position "W", Double Interlock
C2	1053497	Character, Standard
C2	1057423	Character, Double Interlock
C2	1057422	Character, Position 41, Double Interlock
C2	1053513	"Carriage Return", Position "V", Standard
C2	1057440	"Carriage Return", Position "V", Double Interlock
C2	1054153	"Carriage Return", Position "V", Justo Recorder only
C3	1053499	Character, Standard
C3	1057426	Character, Double Interlock
C3	1053503	"Lower Case", L.H., Position "Q", Standard & Double Interlock
C3	1054639	"Carriage Return", Position 38, (bridged to position "V")
C3	1057427	Character, Position 38, Double Interlock
C3	1057427	Character, Position 42, Double Interlock
C3	1053518	"Lower Case", R.H., Position "Z", Standard
C3	1057444	"Letter Case", R.H., Position "Z", Double Interlock
C4	1053501	Character, Standard
C4	1057431	Character, Double Interlock
C4	1053506	"Upper Case", L.H., Position "R", Standard
C4	1057434	"Figures Case", L.H., Position "R", Double Interlock
C4	1057583	"Figures Case", Blank Position, FPC5P - 3 Bank
C4	1057209	"Figures Case", Position "U", 3 Bank
C4	1057213	"Repeat Space", Position "U" - FG40 & FG80
C4	1054640	"Letters Case", Position 32, 3 Bank

KEYLEVER, CAM AND TYPEBAR - FIGURE 1

Keylever, Cam and Typebar

Keylever Chart

Ref. No.	Part No.	Part Name
C4	1057430	Character, Position 32, Double Interlock
C4	1057430	Character, Position 36, Double Interlock
C4	1057430	Character, Position 40, Double Interlock
C4	1041130	"Program 3", Position 43, - FPC8 S.C.
C4	1053517	"Upper Case", R.H., Position "Y", Standard & Double Interlock
C4	1041129	"On 2", Position "Z", FPC8P - S.C.
C4	1041129	"Program 4", Position "Z", FPC8 - S.C.

Keylevers without Keybutton Stem

	1054638	Figures Cam Operating, L.H., Position "R", - bank
	1056883	Tab Cam Operating, Position "S", Tab over Character
	1053511	"Space Bar", Position "T", Standard
	1057438	"Space Bar", Position "T", Double Interlock
	1054637	Letters Cam Operating, R.H., Position "Z", 3 Bank
	1056882	Dummy, Position "Q", Fill in for L.H. Letters - 3 Bank

KEYLEVER, CAM AND TYPEBAR - FIGURE 1

Keylever, Cam and Typebar

Keybutton Chart

Listed below are all of the various types of molded keybuttons with assigned part numbers. Any button not listed on this chart must be ordered as a specially engraved button with the part number 1042868 for the small keybuttons, 1042869 for the large keybuttons.

When ordering keybuttons a two letter prefix must be included with the part number. The first letter of the prefix indicates the color keybutton wanted, and the second letter indicates the color(s) that the keybutton is to be filled with.

Legend of Letter Prefix

Basic Button Color (1st letter)	Filled with (2nd letter)
B - Blue	D - Brown
C - Grey	K - Tan (upper) Red (lower)
D - Brown (Dark)	R - Red
T - Tan (Light)	T - Tan
G - Green	V - White (upper) Red (lower)
M - Maroon	W - White
	X - Blank (no filling)
	Y - Red (upper) Tan (lower)
	Z - Red (upper) White (lower)

Examples

If letter A, centered on a blue keybutton filled with white, is needed the part number will be BW-1042330.

If letter A, centered on a brown keybutton filled with tan, is needed the part number will be DT-1042330.

If a blue keybutton filled with white with a Period over A is desired by a customer then the part number will be BW-1042868, followed by a description of what is wanted. In this case, "Period over A".

PART NO.	PART NAME
1042330	Keybutton, Letter A, Centered
1042847	Keybutton, Letter A, Lower Case
1054658	Keybutton, Hyphen over A
1041460	Keybutton, Degree over A
1041462	Keybutton, Diphthong AE
1042331	Keybutton, Letter B, Centered
1041183	Keybutton, Dollar over B
1054672	Keybutton, Apostrophe over B
1055050	Keybutton, 5/8 over B
1055047	Keybutton, Question over B
1042325	Keybutton, Letter B, Lower Case
1042332	Keybutton, Letter C, Centered
1055290	Keybutton, Letter C, Centered, Special
1055045	Keybutton, Letter C, Lower Case
1041199	Keybutton, Colon over C

KEYLEVER, CAM AND TYPEBAR - FIGURE 1

Keylever, Cam and Typebar

Keybutton Chart

PART NO.	PART NAME
1054670	Keybutton, Percent over C
1055048	Keybutton, 1/8 over C
1042333	Keybutton, Letter D, Centered
1042848	Keybutton, Letter D, Lower Case
1054660	Keybutton, Dollar over D
1042334	Keybutton, Letter E, Centered
1054650	Keybutton, 3 over E
1042335	Keybutton, Letter F, Centered
1042849	Keybutton, Letter F, Lower Case
1056204	Keybutton, CE over F
1041184	Keybutton, Apostrophe over F
1040754	Keybutton, Hyphen over F
1055039	Keybutton, 1/4 over F
1055038	Keybutton, Percent over F
1056520	Keybutton, TAB over F
1041943	Keybutton, Ampersand over F
1042336	Keybutton, Letter G, Centered
1040756	Keybutton, Cent over G
1056521	Keybutton, TAB over G
1054662	Keybutton, Ampersand over G
1041946	Keybutton, Letter G, Lower Case
1042251	Keybutton, Percent over G
1042337	Keybutton, Letter H, Centered
1042850	Keybutton, Letter H, Lower Case
1054663	Keybutton, Number over H
1041185	Keybutton, L Curve over H
1042338	Keybutton, Letter I, Centered
1054655	Keybutton, 8 over I
1042339	Keybutton, Letter J, Centered
1042851	Keybutton, Letter J, Lower Case
1055992	Keybutton, STOP over J
1055040	Keybutton, Comma over J
1042340	Keybutton, Letter K, Centered
1041182	Keybutton, Letter K, Lower Case
1054665	Keybutton, L Curve over K
1055041	Keybutton, 1/2 over K
1042341	Keybutton, Letter L, Centered
1054666	Keybutton, R Curve over L
1055042	Keybutton, 3/4 over L
1040757	Keybutton, Ampersand over L
1042342	Keybutton, Letter M, Centered
1054674	Keybutton, Period over M
1042343	Keybutton, Letter N, Centered
1042852	Keybutton, Letter N, Lower Case
1040755	Keybutton, Commercial A over N

KEYLEVER, CAM AND TYPEBAR - FIGURE 1

Keylever, Cam and Typebar

Keybutton Chart

PART NO.	PART NAME
1055051	Keybutton, 7/8 over N
1054673	Keybutton, Comma over N
1042344	Keybutton, Letter O, Centered
1054656	Keybutton, 9 over O
1042345	Keybutton, Letter P, Centered
1054657	Keybutton, Zero over P
1040272	Keybutton, Split Zero over P
1042346	Keybutton, Letter Q, Centered
1054648	Keybutton, 1 over Q
1042347	Keybutton, Letter R, Centered
1054651	Keybutton, 4 over R
1042348	Keybutton, Letter S, Centered
1055037	Keybutton, Letter S, Lower Case
1054659	Keybutton, Diagonal over S
1042349	Keybutton, Letter T, Centered
1054652	Keybutton, 5 over T
1042350	Keybutton, Letter U, Centered
1054654	Keybutton, 7 over U
1042351	Keybutton, Letter V, Centered
1042853	Keybutton, Letter V, Lower Case
1055049	Keybutton, 3/8 over V
1054671	Keybutton, Semi-Colon over V
1055046	Keybutton, Quotes over V
1042352	Keybutton, Letter W, Centered
1054649	Keybutton, 2 over W
1042353	Keybutton, Letter X, Centered
1042854	Keybutton, Letter X, Lower Case
1054669	Keybutton, X over X
1055044	Keybutton, Diagonal over X
1042354	Keybutton, Letter Y, Centered
1054653	Keybutton, 6 over Y
1042355	Keybutton, Letter Z, Centered
1055043	Keybutton, Letter Z, Lower Case
1054668	Keybutton, Quotes over Z
1042859	Keybutton, Number 1, Centered
1042837	Keybutton, Degree over 1
1056795	Keybutton, Apostrophe over 1
1042856	Keybutton, Exclamation over 1
1056239	Keybutton, Quotes over 1
1041961	Keybutton, 1/2 over 1
1042378	Keybutton, Asterisk over 1
1040274	Keybutton, Underscore over 1
1042860	Keybutton, Number 2, Centered
1042857	Keybutton, Quotes over 2
1056105	Keybutton, Ampersand over 2

KEYLEVER, CAM AND TYPEBAR - FIGURE 1

Keylever, Cam and Typebar

Keybutton Chart

PART NO.	PART NAME
1056791	Keybutton, Commercial A over 2
1041449	Keybutton, Plus over 2
1042861	Keybutton, Number 3, Centered
1042855	Keybutton, Diagonal over 3
1056792	Keybutton, Number over 3
1041450	Keybutton, Ampersand over 2
1042862	Keybutton, Number 4, Centered
1056109	Keybutton, Dollar over 4
1041451	Keybutton, Percent over 4
1041136	Keybutton, Equals over 4
1042863	Keybutton, Number 5, Centered
1056110	Keybutton, Percent over 5
1041452	Keybutton, L Curve over 5
1042252	Keybutton, Ampersand over 5
1042864	Keybutton, Number 6, Centered
1075049	Keybutton, Question over 6
1056793	Keybutton, Cent over 6
1041453	Keybutton, Equals over 6
1045588	Keybutton, Apostrophe over 6
1042865	Keybutton, Number 7, Centered
1075051	Keybutton, Exclamation over 7
1056794	Keybutton, Question over 7
1042370	Keybutton, Ampersand over 7
1055213	Keybutton, Star over 7
1041454	Keybutton, Underscore over 7
1042866	Keybutton, Number 8, Centered
1042371	Keybutton, Commercial A over 8
1056113	Keybutton, Asterisk over 8
1041455	Keybutton, R Curve over 8
1042867	Keybutton, Number 9, Centered
1056230	Keybutton, L Curve over 9
1041456	Keybutton, Diagonal over 9
1042858	Keybutton, Number 0, Centered
1056231	Keybutton, R Curve over 0
1041457	Keybutton, Section over 0
1040273	Keybutton, Split 0, Centered
1042374	Keybutton, 1/4 over 1/2
1055295	Keybutton, 1/2, Centered
1041385	Keybutton, 8 over 1/2
1055243	Keybutton, 1/2 over 1/4

KEYLEVER, CAM AND TYPEBAR - FIGURE 1

Keylever, Cam and Typebar

Keybutton Chart

PART NO.	PART NAME
1041959	Keybutton, 1/4 over 3/4
1041960	Keybutton, Cent over 3/4
1055241	Keybutton, Apostrophe over 3/4
1042841	Keybutton, Apostrophe, Centered
1041381	Keybutton, 4 over Apostrophe
1042372	Keybutton, Quotes over Apostrophe
1057905	Keybutton, Colon, Centered
1055265	Keybutton, Care Of over Colon
1041393	Keybutton, Diagonal over Colon
1057752	Keybutton, Colon over Semi-Colon
1041392	Keybutton, Period over Semi-Colon
1042844	Keybutton, Comma, Centered
1057750	Keybutton, Comma over Comma
1041391	Keybutton, Question over Comma
1041382	Keybutton, 5 over L Curve
1041388	Keybutton, Degree over R Curve
1041396	Keybutton, 0 over R Curve
1055294	Keybutton, Care Of, Centered
1042843	Keybutton, Hyphen, Centered
1056769	Keybutton, Underscore over Hyphen
1056745	Keybutton, Quotes over Hyphen
1075103	Keybutton, Asterisk over Hyphen
1041394	Keybutton, Exclamation over Hyphen
1041459	Keybutton, 1/2 over Hyphen
1057726	Keybutton, Equals over Exclamation
1041383	Keybutton, 6 over Underscore
1042845	Keybutton, Period, Centered
1057675	Keybutton, Period, Lower Case
1057751	Keybutton, Period over Period
1041463	Keybutton, Colon over Period
1042842	Keybutton, Quotes, Centered
1041379	Keybutton, 2 over Quotes
1041458	Keybutton, Apostrophe over Quotes
1042375	Keybutton, L Quotes over R Quotes
1042400	Keybutton, Number
1042846	Keybutton, Diagonal, Centered
1040759	Keybutton, Exclamation over Diagonal
1042838	Keybutton, Colon over Diagonal
1042373	Keybutton, Question over Diagonal
1055267	Keybutton, Ampersand over Diagonal

KEYLEVER, CAM AND TYPEBAR - FIGURE 1

Keylever, Cam and Typebar

Keybutton Chart

PART NO.	PART NAME
1042839	Keybutton, Ampersand, Centered
1056798	Keybutton, Quotes over Ampersand
1056744	Keybutton, Semi-Colon over Ampersand
1041384	Keybutton, 7 over Ampersand
1056125	Keybutton, Number over Commercial A
1042840	Keybutton, Percent, Centered
1041380	Keybutton, 3 over Percent
1042253	Keybutton, Semi-Colon over Percent
1041137	Keybutton, Dollar, Centered
1041135	Keybutton, Underscore over Dollar
1042379	Keybutton, Equals over Plus
1041389	Keybutton, Equals over Accented 1
1041390	Keybutton, Acute over Grave
1041461	Keybutton, Canceled Zero, Centered
1041386	Keybutton, Nine over C over Cedilla
1041387	Keybutton, Plus over Pound Sterling
1041395	Keybutton, 1 over Pound Sterling
1042836	Keybutton, BACK SPACE
1055307	Keybutton, REPEAT SPACE
1057742	Keybutton, 8 CODE
1041138	Keybutton, NON PRINT CODE
1054222	Keybutton, LOWER CASE
1054234	Keybutton, UPPER CASE
1055582	Keybutton, SKIP, Centered
1055583	Keybutton, NON SKIP
1054245	Keybutton, ONE UNIT
1054246	Keybutton, THREE UNITS
1042057	Keybutton, 1 UNIT over 3 UNIT
1057004	Keybutton, PROGRAM 1
1057002	Keybutton, PROGRAM 2
1041313	Keybutton, PROGRAM 3
1041244	Keybutton, PROGRAM 4
1045433	Keybutton, OFF, Centered
1045434	Keybutton, FIELD CONTROL ON
1057976	Keybutton, PUNCH ON 1
1057977	Keybutton, PUNCH ON 2
1057692	Keybutton, PUNCH OFF
1040275	Keybutton, PUNCH ON
1056768	Keybutton, ON 1 over ON 2
1057859	Keybutton, ON 2 over ON 1

KEYLEVER, CAM AND TYPEBAR - FIGURE 1

Keylever, Cam and Typebar

Keybutton Chart

PART NO.	PART NAME
1042326	Keybutton, ON 1, Centered
1042327	Keybutton, ON 2, Centered
1056796	Keybutton, END CARD
1057847	Keybutton, END LINE
1054676	Keybutton, LINE FEED
1055268	Keybutton, PLATE DISC
1056107	Keybutton, CARD EJECT
1054208	Keybutton, COLOR SHIFT
1056106	Keybutton, ERROR, Centered
1057673	Keybutton, FIGURES
1054675	Keybutton, LETTERS
1054197	Keybutton, TAB
1042406	Keybutton, SWITCH CODE
1040276	Keybutton, CONTROL
1054295	Keybutton, Large Keybutton, Line Space
1054221	Keybutton, Large Keybutton, Carriage Return
1042212	Keybutton, Large Keybutton, Blank
1042869	Keybutton, Large Keybutton, Special Engraved
1042211	Keybutton, Small Keybutton, Blank
1042868	Keybutton, Small Keybutton, Special Engraved

KEYLEVER, CAM AND TYPEBAR ← FIGURE 1

Keylever, Cam and Typebar

Contact Panel Button Chart

The Color Code Prefix used for ordering Keybuttons must also be used when ordering Contact Panel Buttons. For those Contact Panel Buttons not listed use 1042870 with the proper Color Code and description.

PART NO.	PART NAME
1057399	Contact Panel Button, I, Centered
1057398	Contact Panel Button, II, Centered
1057753	Contact Panel Button, ERROR, Centered
1055579	Contact Panel Button, SKIP, Centered
1053620	Contact Panel Button, START READ
1053621	Contact Panel Button, STOP READ
1053622	Contact Panel Button, PUNCH ON
1053623	Contact Panel Button, TAPE FEED
1053624	Contact Panel Button, CODE DELETE
1053625	Contact Panel Button, STOP CODE
1053626	Contact Panel Button, END LINE
1053627	Contact Panel Button, NON JUSTIFY
1053628	Contact Panel Button, LINE DELETE
1053629	Contact Panel Button, J CARRIAGE RETURN
1057400	Contact Panel Button, NON PRINT
1041127	Contact Panel Button, TAPE SKIP
1041126	Contact Panel Button, PRINT CODE
1041248	Contact Panel Button, SPACE CODE
1056094	Contact Panel Button, 8 CODE
1055580	Contact Panel Button, NON SKIP
1057703	Contact Panel Button, LINE SKIP
1055254	Contact Panel Button, LINE SPACE
1056093	Contact Panel Button, CARD PUNCH TAPE
1040149	Contact Panel Button, PUNCH ADDRESS
1040207	Contact Panel Button, AUXILIARY CODE
1042213	Contact Panel Button, BLANK
1042870	Contact Panel Button, SPECIAL ENGRAVED

Friden, Inc.

NEW KEYLOCK MAGNET - FIGURE 2

Keylever, Cam and Typebar

NEW KEYLOCK MAGNET - FIGURE 2

Keylever, Cam and Typebar

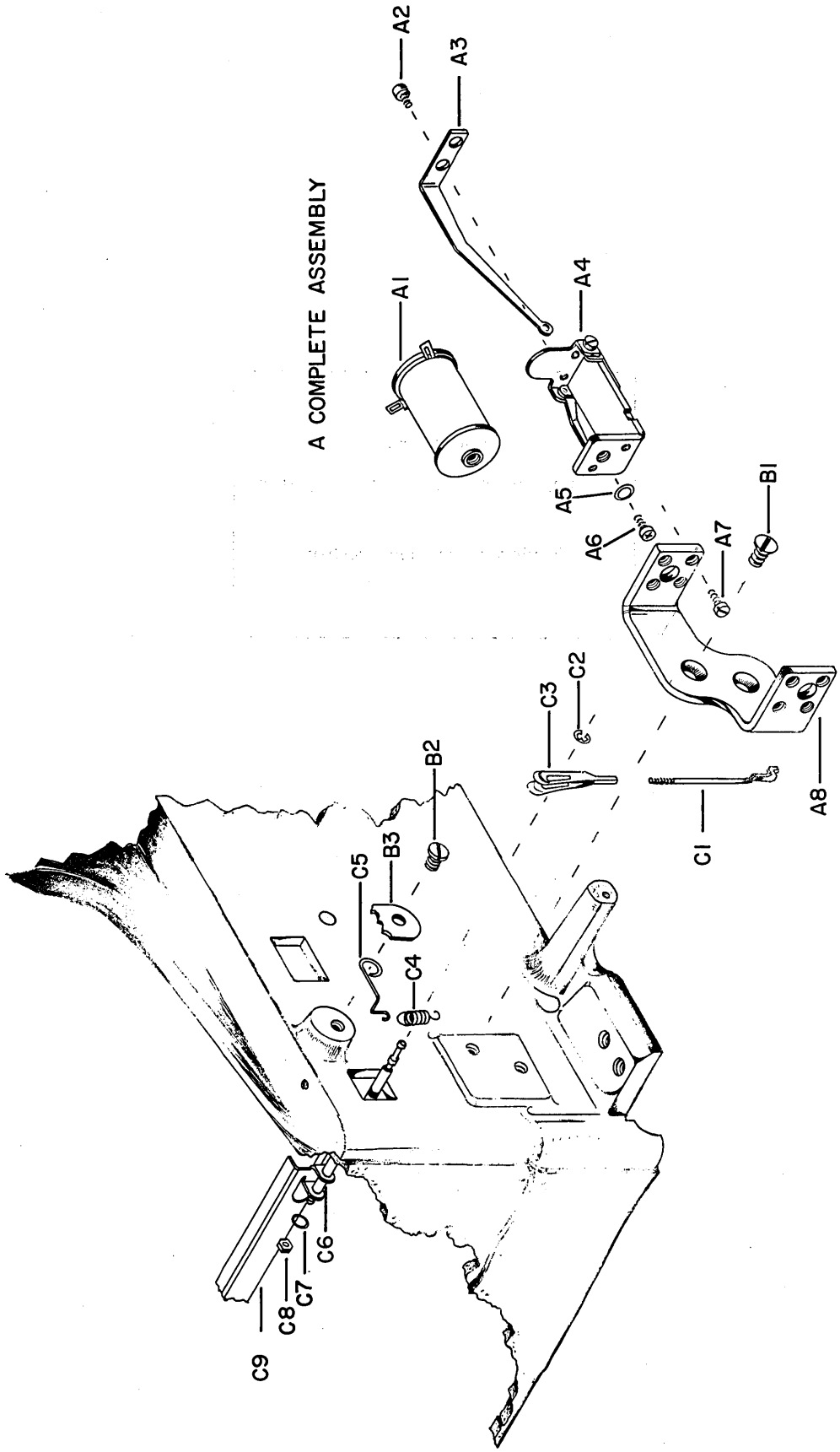

NEW KEYLOCK MAGNET - FIGURE 2

Keylever, Cam and Typebar

Ref. No.	Part No.	Part Name
A	1044575	90V, Magnet, Arm, and Bracket Keylock Assembly
A	1044576	48V, Magnet, Arm, and Bracket Keylock Assembly
A1a	1045577	90V, 6500 Ohm Coil
A1b	1045578	48V, 1400 Ohm Coil
A1c	1045579	90V, 1000 Ohm Coil for Verifier and Computyper
A1d	1045580	48V, 255 Ohm Coil for Verifier and Computyper
A2	38259	Screw
A3	1044521	Keylever Lock Magnet Arm
A4	1044568	90V, Keylock Operating Magnet Assembly, includes A1a
A4	1044566	48V, Keylock Operating Magnet Assembly, includes A1b
A4	1044567	90V, Keylock Operating Magnet Assembly, includes A1c
A4	1044565	48V, Keylock Operating Magnet Assembly, includes A1d
A5	1057580	Washer
A6	1091799	Screw for mounting A1 to A4
A7	1044523	Screw for mounting A4 to A8
A8	1044520	Keylever Lock Magnet Bracket
B1	1090722	Screw for mounting Keylock Bracket Assembly
B2	163	Screw
B3		Line Switch for Motor (see Electrical Section, Fig. 1)
C1	1016247	Link
C2	1054571	C Clip
C3	1053598	Clevis
C4	1091072	Spring
C5	1044524	Anchor Spring
C6	1044516	Keylever Lock Operating Shaft
C7	1091111	Lock Washer for C6
C8	1090261	Nut for C6
C9	1044514	Keylever Lock Bar Assembly

PARTS LIST

FRIDEN

FLEXOWRITER-JUSTOWRITER

RIBBON FEED MECHANISM

Figure 1—Ribbon Feed Mechanism

FRIDEN, INC.
HOME OFFICE: SAN LEANDRO, CALIFORNIA
SALES AND SERVICE THROUGHOUT WORLD

Printed in U. S. A.

RIBBON FEED MECHANISM - FIGURE 1

Ribbon Feed Mechanism

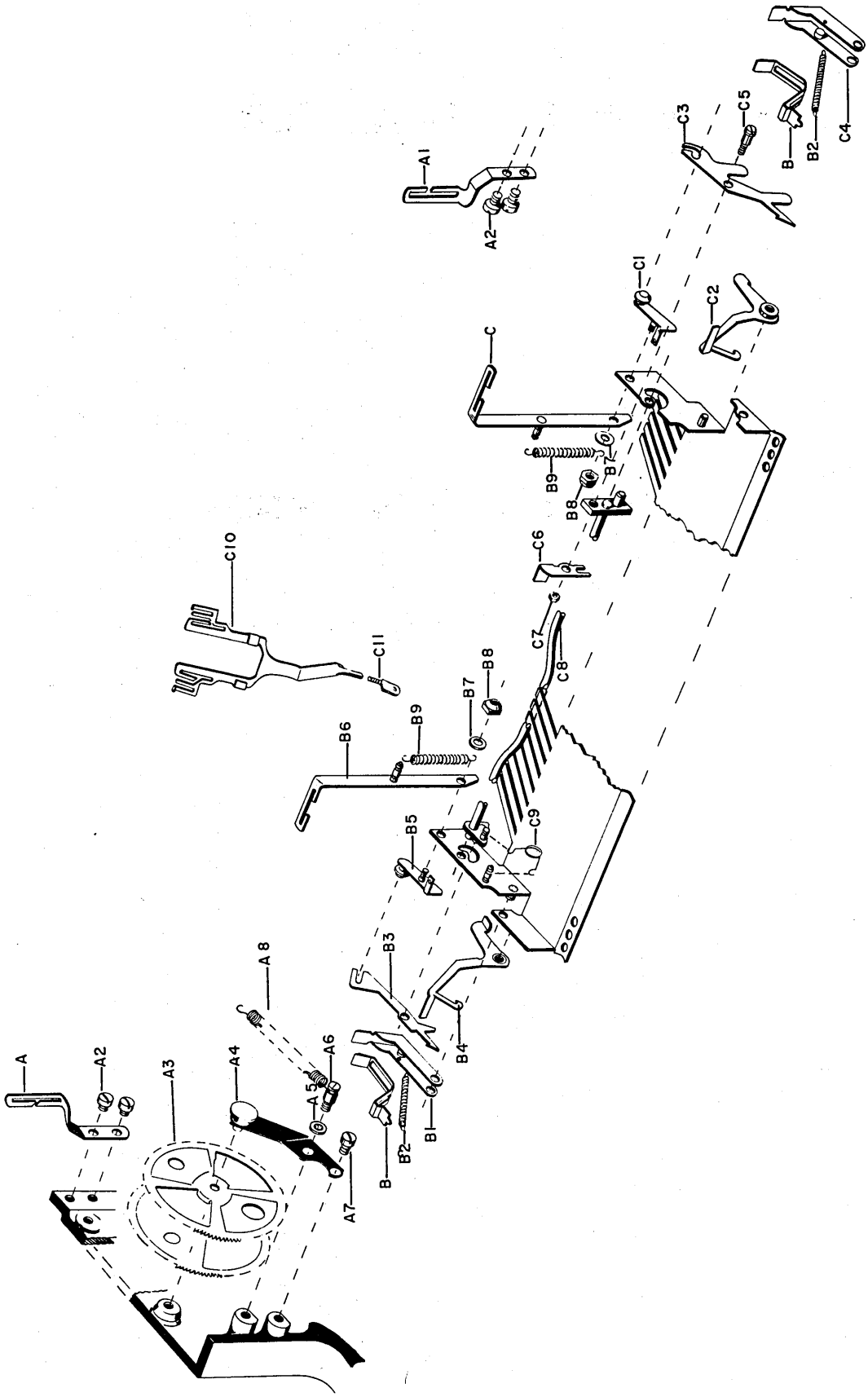

RIBBON FEED MECHANISM - FIGURE 1

Ribbon Feed Mechanism

Ref. No.	Part No.	Part Name
A	1042892	Ribbon Guide Bracket, L.H.
A1	1042893	Ribbon Guide Bracket, R.H.
A2	1090003	Screw
A3	1059069	Ribbon Spool
A4	1057137	Ribbon Spool Spring Assembly
A5	1090358	Lockwasher
A6	1090393	Stud
A7	1090003	Screw
A8	1090165	Spring (for Ribbon reverse lever)
B	1054282	Ribbon Feed Pawl
B1	1054256	Ribbon Check Pawl, L.H.
B2	1054336	Feed Pawl Spring
B3	1054260	Ribbon Reverse Pawl, L.H.
B4	1054249	Ribbon Feed Lever, L.H.
B5	1000142	Ribbon Reverse Spring Arm, L.H.
B6	1042897	Ribbon Reverse Lever Assembly, L.H.
B7	1090269	Washer
B8	1091952	Nut
B9	1090589	Spring
C	1042898	Ribbon Reverse Lever Assembly, R.H.
C1	1000143	Ribbon Reverse Spring Arm, R.H.
C2	1054252	Ribbon Feed Lever, R.H.
C3	1054258	Ribbon Reverse Pawl, R.H.
C4	1054254	Ribbon Check Pawl, R.H.
C5	1090494	Stud
C6	1054315	Manual Ribbon Reverse Lever
C7	1090268	Nut
C8	1054271	Ribbon Reverse Bar
C9	1054401	Spring
C10	1054862	Ribbon Guide
C11	1057042	Ribbon Guide Link

PARTS LIST

FRIDEN

FLEXOWRITER-JUSTOWRITER

TABULAR MECHANISM

Figure 1—Tab Keylever and Linkage

Figure 2—Tab Parts—Rear Rail

Figure 3—Main Spring Drum

FRIDEN, INC.
HOME OFFICE: SAN LEANDRO, CALIFORNIA
SALES AND SERVICE THROUGHOUT WORLD

Printed in U. S. A.

TAB KEYLEVER AND LINKAGE - FIGURE 1

Tabular Mechanism

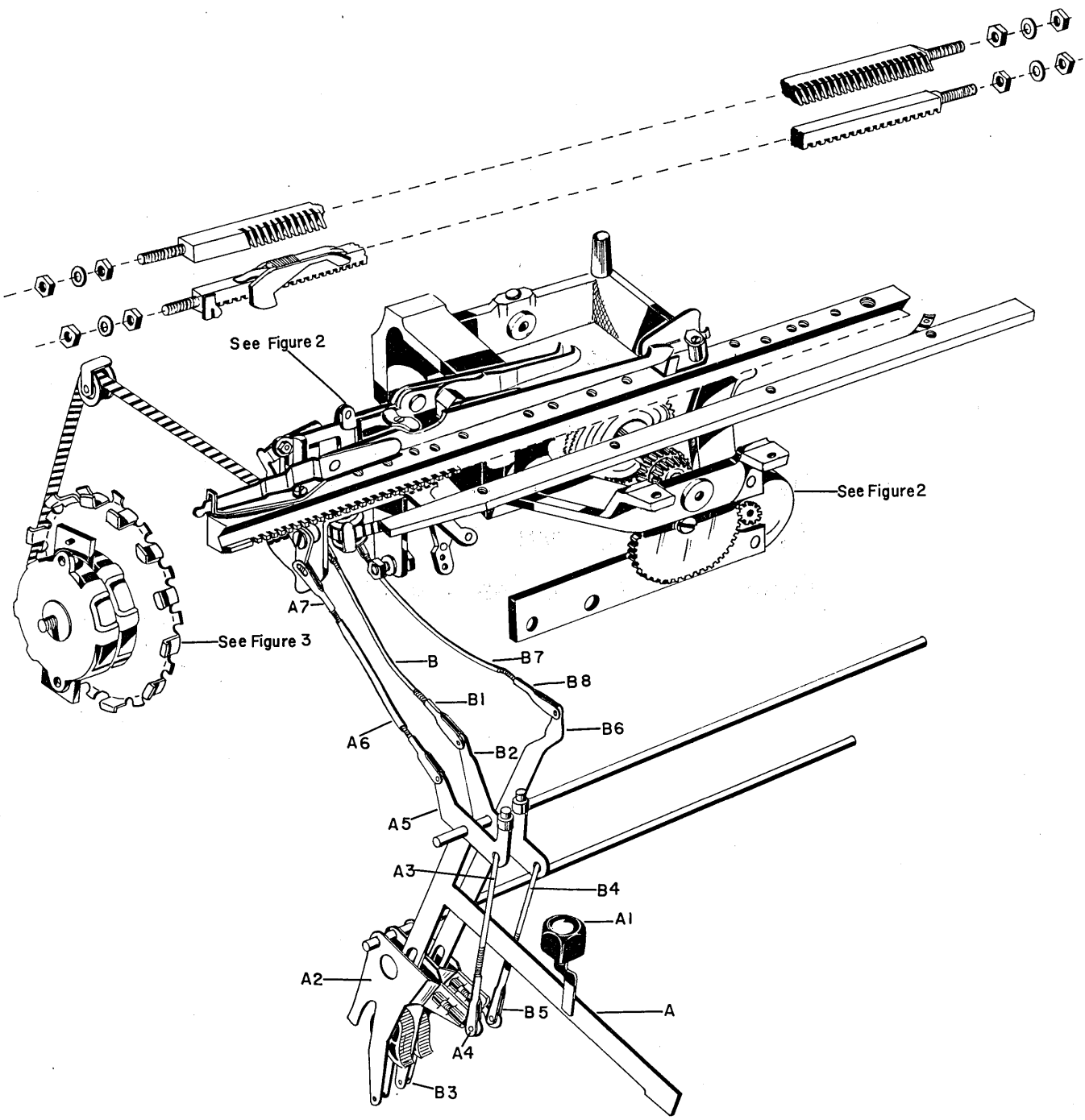

TAB KEYLEVER AND LINKAGE - FIGURE 1

Tabular Mechanism

Ref. No.	Part No.	Part Name
A	1053508	Tab Keylever, Position "S ", Standard
A	1057436	Tab Keylever, Position "S", Double Interlock
A1	1054197	Key Button (See "Keybutton Chart", Keylever Section, Page 7)
A2	1053434	Tab Cam
A3	1040996	Link (cam)
A4	1040699	Link (clevis)
A5	1057061	Tab Bellcrank
A6	1054289	Tab Operating Link
A7	1053598	Tab Operating Link (slip motion)
B	1016381	Link Assembly (unlatch trip) (includes B1)
B1	1040839	Link (clevis)
B2	1057063	Bellcrank (unlatch operating)
B3	1053533	CR & Tab Unlatch Cam
B4	1040996	Link (cam)
B5	1040699	Link (clevis)
B6	1040992	Lever Assembly (unlatch trip)
B7	1054995	Tab & CR Unlatch Operating Link (includes B8)
B8	1040699	Link (clevis)

TAB PARTS - REAR RAIL - FIGURE 2

Tabular Mechanism

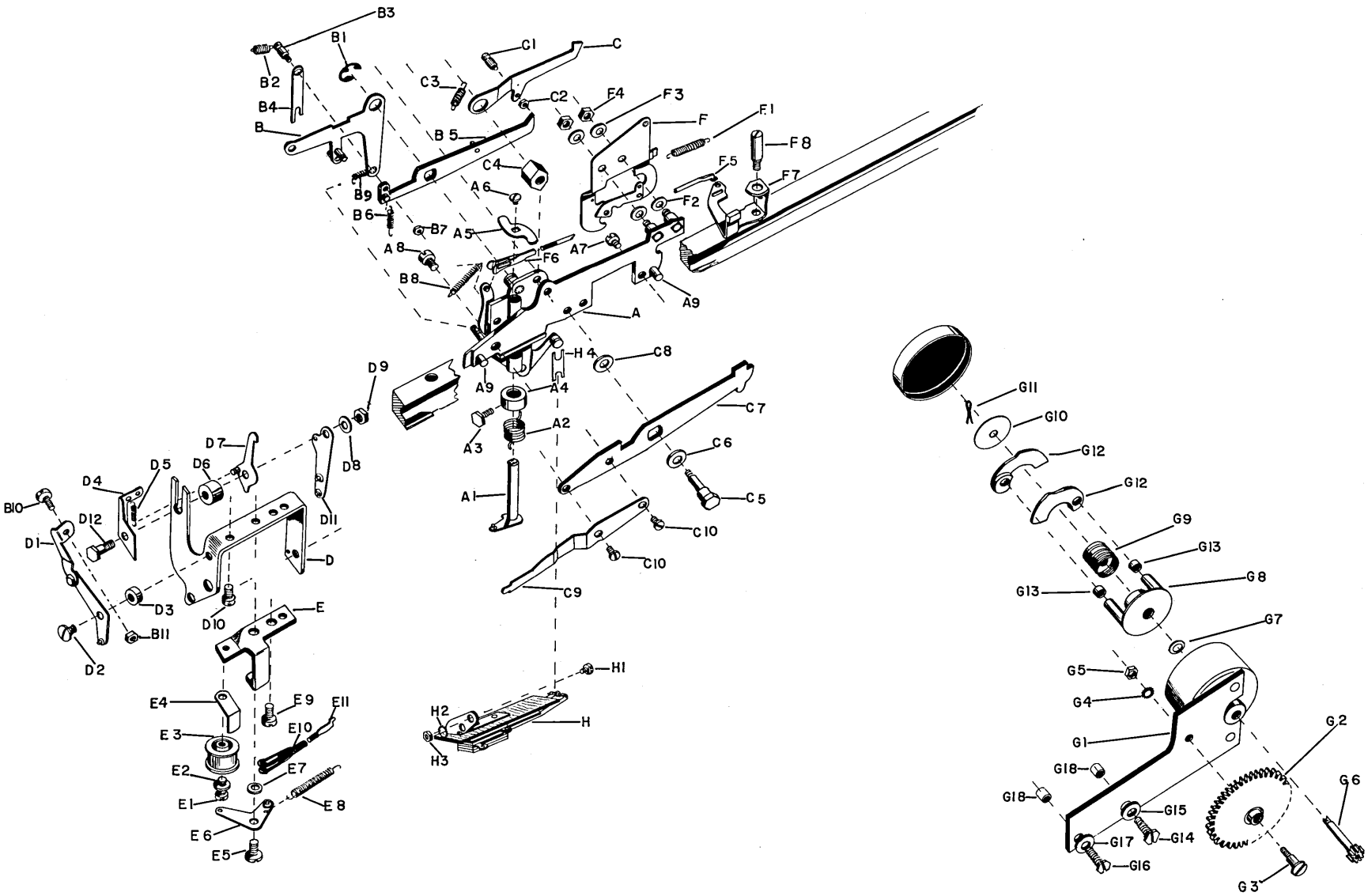

TAB PARTS - REAR RAIL - FIGURE 2

Tabular Mechanism

Ref. No.	Part No.	Part Name
A	1056469	Lever and Bracket Assembly
A1	1016139	Shaft Assembly
A2	1091000	Spring
A3	1090449	Screw
A4	1091001	Collar
A5	1053830	Lever
A6	1091068	Screw (for A5)
A7	1090022	Screw (for A)
A8	38380	Screw (for A)
A9	46826	Dowel
B	1016135	Tab Operating Lever Assembly
B1	1056265	Retaining Clip
B2	1091073	Spring (from B3 to B)
B3	1057205	Eccentric Stud
B4	1057572	Tab Lever Link
B5	1054455	Tab Lever Assembly
B6	1091072	Spring (from B5 to B)
B7	1090268	Nut (for B3)
B8	1091075	Spring
B9	1090794	Spring
B10	1045519	Screw
B11	1090037	Nut
C	1054453	Rebound Check Lever
C1	1056712	Eccentric Stud
C2	1090268	Nut (for C1)
C3	1090794	Spring (for B5 & C)
C4	1054452	Eccentric Nut
C5	1054451	Stud
C6	1090887	Washer
C7	1053832	Margin Release Lever
C8	1090254	Spacer
C9	1055027	Margin Release Lever Extension
C10	1090845	Screw
D	1053842	Bracket Assembly
D1	1016147	Link & Bellcrank Assembly
D2	1090438	Screw
D3	1091007	Spacer
D4	1016148	Spring Bracket
D5	1091070	Tab Lever Latch Spring
D6	1091005	Spacer
D7	1016149	Tab Lever Latch
D8	1090622	Washer
D9	1090037	Nut

TAB PARTS - REAR RAIL - FIGURE 2

Tabular Mechanism

Ref. No.	Part No.	Part Name
D10	1041999	Screw (for D)
D11	1053843	Lever
D12	1091006	Stud
E	1053825	Pulley Bracket
E1	1090353	Stud (to mount E3)
E2	1090386	Washer
E3	1041208	Pulley
E4	1000541	Bracket
E5	1090438	Stud
E6	1053826	Bellcrank
E7	1090049	Washer
E8	1090162	Spring
E9	1090799	Screw (for D & E)
E10	1053598	Link (Slip Motion)
E11	1014536	Link
F	1016158	Release Pawl Bracket Assembly
F1	1091069	Spring
F2	1090970	Washer
F3	1090622	Washer
F4	1090037	Nut
F5	1054899	Pawl Release Link
F6	1053598	Clevis Link (Slip Motion)
F7	1042154	Release Pawl Lever
F8	1091011	Stud
G	1054615	Tab Governor Complete 12in
G	1055684	Tab Governor Complete 16in & 20in
G1	1054616	Governor Frame Assembly
G2	1054012	Gear
G3	25538	Stud
G4	56313	Washer
G5	7341	Nut
G6	1054334	Shaft
G7	45658	Washer
G8	167980	Shoe Support
G9	1016443	Spring & Hub Assembly
G10	167988	Washer
G11	1090290	Cotter Key
G12	198243	Governor Shoe (12in)
G12	1041284	Governor Shoe (16in & 20in)
G13	1055751	Spacer (12in only)
G14	1091006	Screw, Governor Mounting
G15	1090049	Washer (for G14)
G16	101706	Screw, Governor Mounting
G17	1091121	Washer (for G16)
G18	1090939	Spacer

TAB PARTS - REAR RAIL - FIGURE 2

Tabular Mechanism

Ref. No.	Part No.	Part Name
H	1054788	CRTC Contact (Break) (Also, See Electrical Parts)
H1	151633	Screw (to mount H)
H2	56722	Lockwasher
H3	7341	Nut
H4	1053110	Contact Operator

MAIN SPRING DRUM - FIGURE 3

Tabular Mechanism

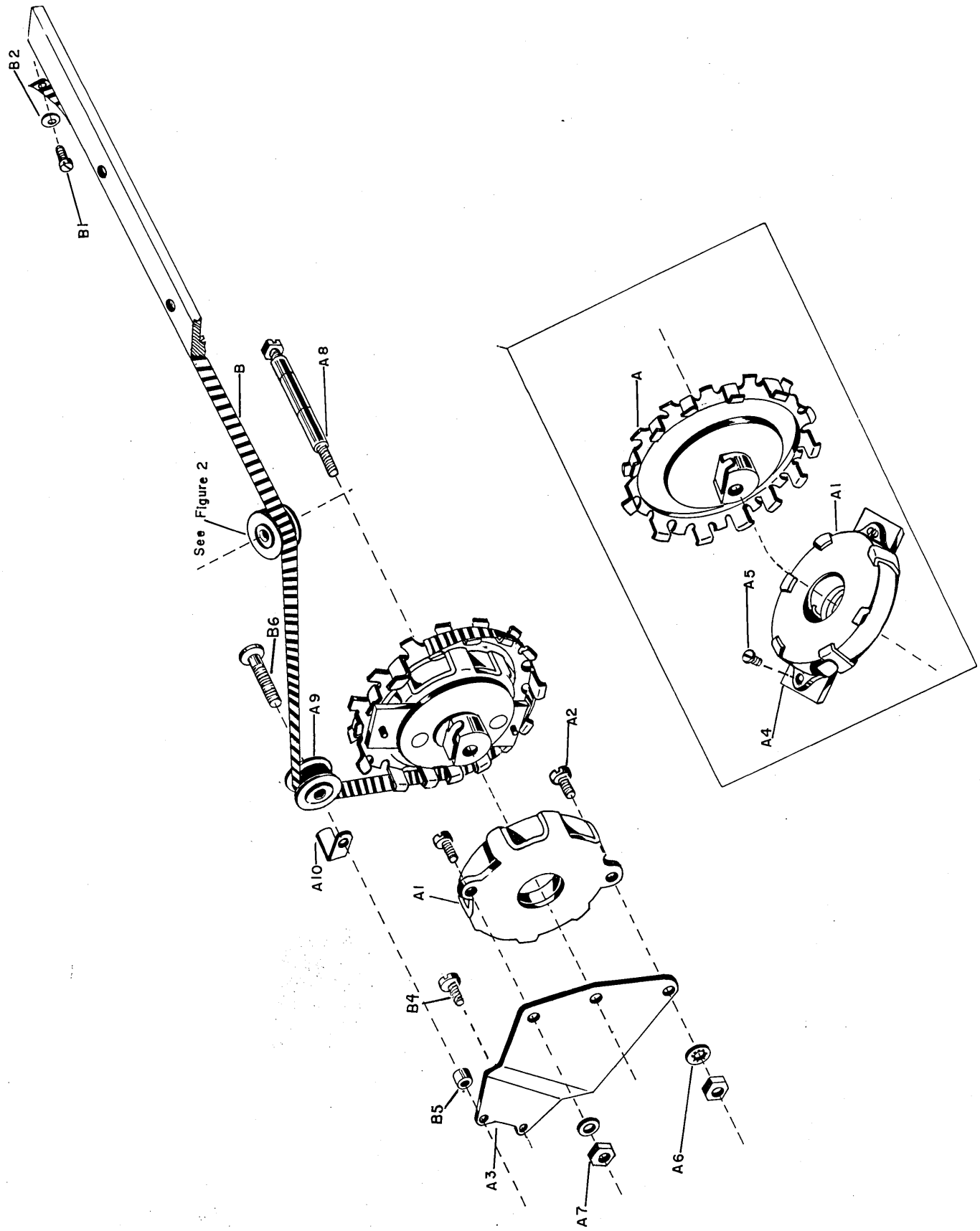

MAIN SPRING DRUM - FIGURE 3

Tabular Mechanism

Ref. No.	Part No.	Part Name
A	1041067	Drum Assembly
A1	1055339	Main Spring & Holder Assembly
A2	1090845	Screw (to mount A1 to A3)
A3	1055342	Adapter Plate
A4	1055337	Adapter Plate & Drum Hub Assembly
A5	1090003	Screw (to mount A1 to A4)
A6	1090358	Lockwasher
A7	1040507	Nut
A8	1055340	Stud
A9	1041208	Pulley
A10	1000541	Guide
B	1055676	Tension Tape 12in
B	1055333	Tension Tape 16in
B	1055419	Tension Tape 20in
B1	1091068	Screw
B2	101633	Washer
B3	173207	Screw
B4	120044	Screw (for A3)
B5	1091007	Spacer
B6	1056850	Screw

PARTS LIST

FRIDEN

FLEXOWRITER-JUSTOWRITER

CARRIAGE RETURN MECHANISM

Figure 1-Carriage Return Mechanism

FRIDEN, INC.
HOME OFFICE: SAN LEANDRO, CALIFORNIA
SALES AND SERVICE THROUGHOUT WORLD

Printed in U. S. A.

CARRIAGE RETURN MECHANISM - FIGURE 1

Carriage Return Mechanism

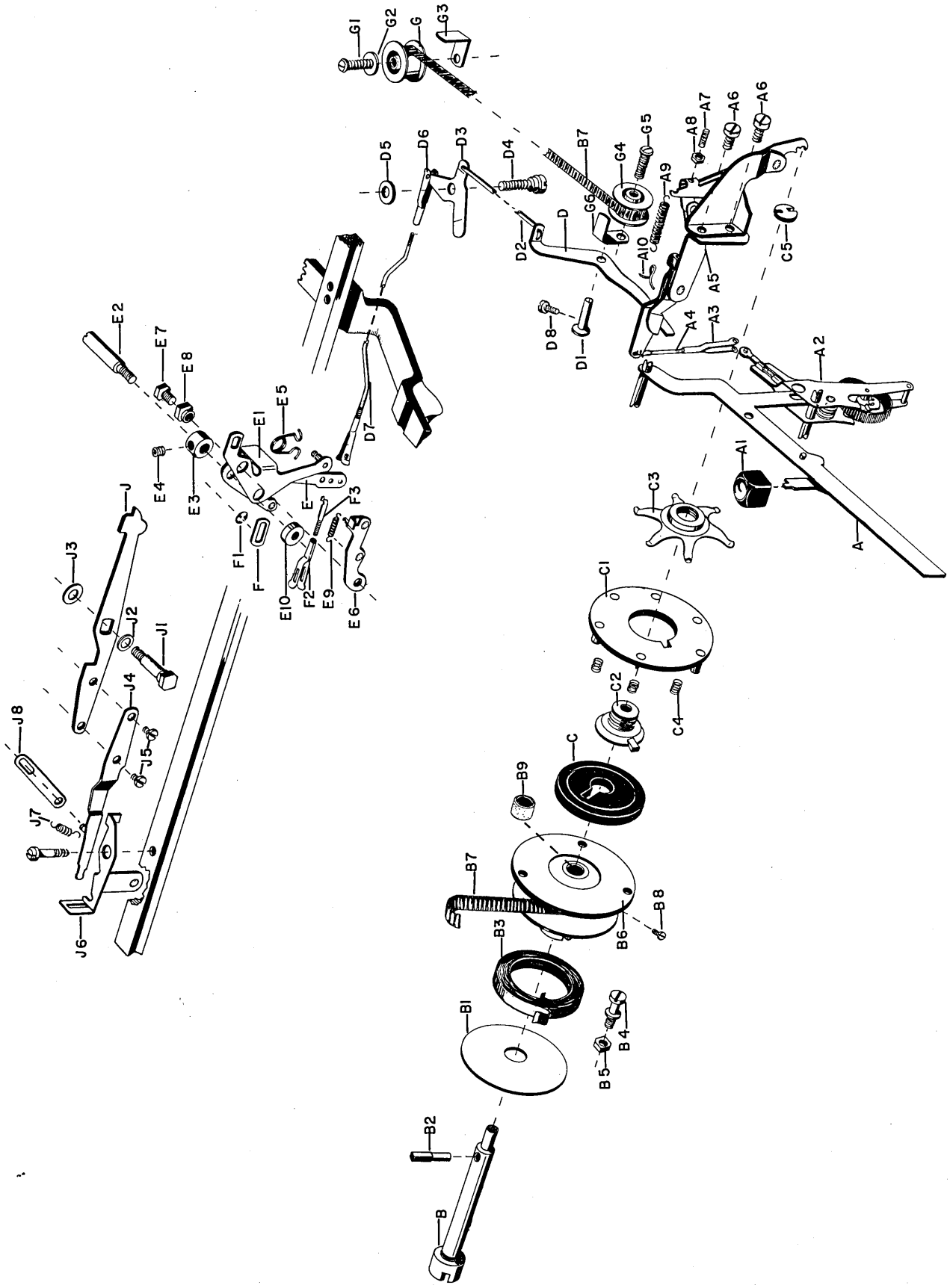

CARRIAGE RETURN MECHANISM - FIGURE 1

Carriage Return Mechanism

Ref. No.	Part No.	Part Name
A	1053513	C.R. Keylever, Position "V", Standard
A	1057440	C.R. Keylever, Position "V", Double Interlock
A	1054153	C.R. Keylever, Position "V", Justo Recorder only
A	1054639	C.R. Keylever, Position "38" (Bridged to position "V")
A1	1054221	Keybutton, (See "Keybutton Chart", Keylever Section, Page 7)
A2	1053433	C.R. Cam
A3	1040699	Clevis Link
A4	1040997	Link
A5	1053647	Clutch Toggle Lever Assembly (includes A7 & A8)
A6	1090014	Screw
A7	205569	Screw, Adj.
A8	7341	Nut
A9	177658	Spring
A10	1090290	Cotter Pin
B	1053655	C.R. Clutch Shaft
B1	1053656	Washer
B2	1091089	Drive Pin
B3	1053657	Clutch Pulley Spring
B4	641	Screw (spring stop)
B5	1040498	Nut
B6	1053658	Clutch Pulley Assembly
B7	1054344	C.R. Tape, 12in
B7	1055343	C.R. Tape, 16in
B7	1055418	C.R. Tape, 20in
B8	1091068	Screw
B9	1056807	Oil Retainer Ring
C	1040408	Clutch Friction Disc.
C1	1056805	Clutch Plate
C2	1053662	Bushing
C3	1040946	Spring (spider)
C4	1090643	Spring (clutch plate)
C5	1053665	Thrust Bushing
D	1000285	Toggle K.O. Lever
D1	1090082	Pivot Stud
D2	1000288	Toggle Knockout Link
D3	1014252	Toggle K.O. Lever, Intermediate
D4	1090114	Stud
D5	1091007	Spacer
D6	1040699	Clevis Link
D7	1040938	Rear Toggle K.O. Link
D8	1090003	Screw

CARRIAGE RETURN MECHANISM - FIGURE 1

Carriage Return Mechanism

Ref. No.	Part No.	Part Name
E	1053850	Line Space Bail & Pin Assembly
E1	1053847	C.R. Bail & Pin Assembly
E2	1053852	Bail Pivot Shaft
E3	1041496	Collar
E4	165556	Set Screw
E5	1054574	Spring
E6	1053853	Bail Stop Arm & Latch
E7	1090449	Screw
E8	1040494	Eccentric Nut
E9	1091759	Spring
E10	1045110	Spacer
F	1053849	Link
F1	1054348	Retaining Clip
F2	1053598	Clevis Link (slip motion)
F3	1040967	Link (toggle K.O. rear)
G	1041208	C.R. Tape Pulley
G1	173207	Screw
G2	1090386	Washer
G3	1000541	Guide
G4	1056846	C.R. Tape Pulley
G5	1056850	Screw
G6	1057078	Guide
J	1053832	Margin Release Lever
J1	1054451	Stud
J2	1090887	Washer
J3	1090254	Spacer
J4	1055027	Margin Release Lever Extension
J5	1090845	Screw
J6	1055025	Margin Release Pivot Bracket
J7	1091455	Spring
J8	1055026	Margin Release Pivot Link

PARTS LIST

FRIDEN

FLEXOWRITER-JUSTOWRITER

BACK SPACE MECHANISM

Figure 1-Back Space Mechanism

FRIDEN, INC.
HOME OFFICE: SAN LEANDRO, CALIFORNIA
SALES AND SERVICE THROUGHOUT WORLD

Printed in U.S.A.

BACK SPACE MECHANISM - FIGURE 1

Back Space Mechanism

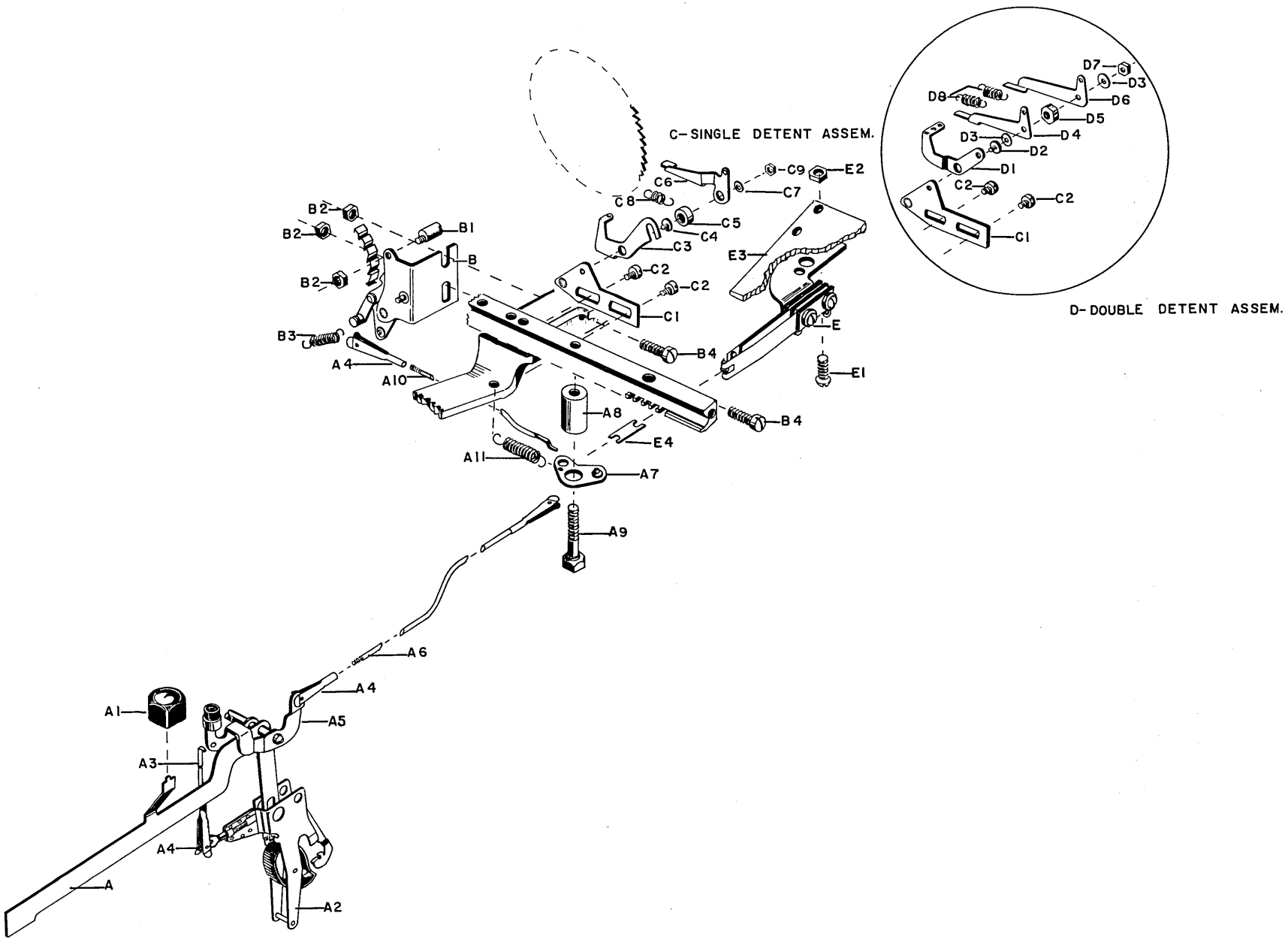

BACK SPACE MECHANISM - FIGURE 1

Back Space Mechanism

Ref. No.	Part No.	Part Name
A	1053515	Back Space Keylever, Position "W", Standard
A1	1042836	Back Space Keybutton (See "Keybutton Chart", Keylever Section, Page 7)
A2	1053434	Back Space Cam Assembly
A3	1040995	Link (cam)
A4	1040699	Clevis Link
A5	1053521	Bellcrank (front)
A6	1054189	Link (side)
A7	1053827	Bellcrank (rear)
A8	1090427	Spacer
A9	1090107	Stud
A10	1041409	B.S. Pawl Link
A11	1091213	Spring
B	1054728	B.S. Pawl Bracket Assembly (Mono-Spacing)
B	1016051	B.S. Pawl Bracket Assembly (P.S.M.)
B1	1090976	Eccentric Stud (included in B)
B2	1090037	Nut (included in B)
B3	1090978	Spring (included in B)
B4	1090010	Screw (to mount B)
C	1055812	Single Detent Pawl Assembly
C1	1016062	Detent Mounting Bracket Assembly
C2	1090003	Screw (to mount C)
C3	1016058	Detent Pawl Bracket
C4	1091068	Screw
C5	1090981	Spacer
C6	1016064	Detent Pawl
C7	1055660	Washer
C8	1091065	Spring
C9	1090268	Nut
D	1055509	Double Detent Pawl Assembly
D1	1055511	Detent Pawl Spring Bracket
D2	1091068	Screw
D3	1055660	Washer
D4	1055512	Detent Pawl Tower
D5	1055513	Eccentric Bushing
D6	1055510	Detent Pawl Upper
D7	1090268	Nut
D8	1091065	Spring
E	1053733	Back Space Contact (Break) (Also, See Electrical Parts)
E1	120044	Screw
E2	7341	Nut
E3	1055870	Contact Cover
E4	1053110	Contact Operator

PARTS LIST

FRIDEN
FLEXOWRITER-JUSTOWRITER

SPACE MECHANISM

Figure 1-Space Mechanism

FRIDEN, INC.
HOME OFFICE: SAN LEANDRO, CALIFORNIA
SALES AND SERVICE THROUGHOUT WORLD

Printed in U. S. A.

SPACE MECHANISM - FIGURE 1

Space Mechanism

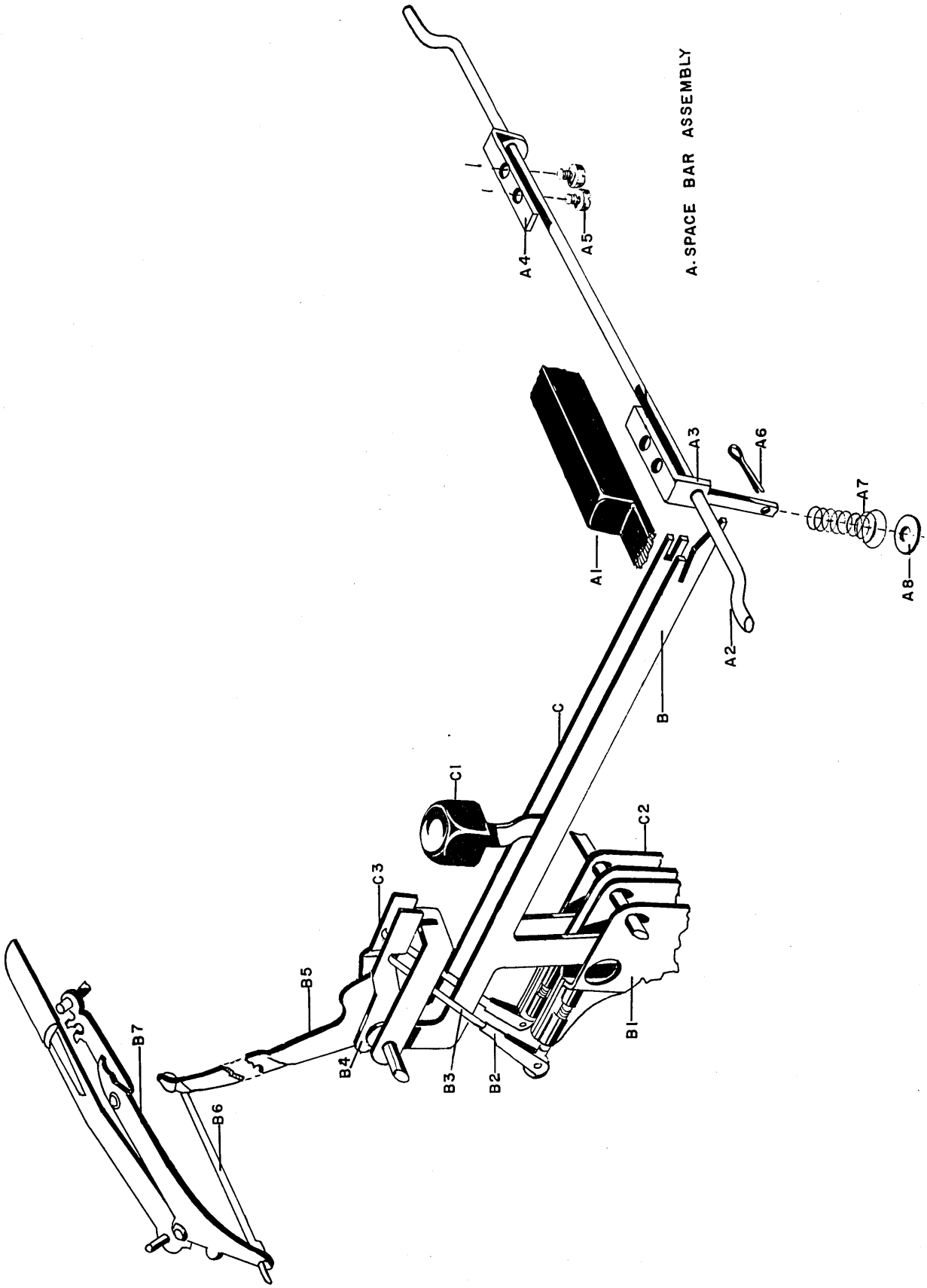

SPACE MECHANISM - FIGURE 1

Space Mechanism

Ref. No.	Part No.	Part Name
A	1053487	Space Bar Assembly (Flexowriter)
A	1054151	Space Bar Assembly (Justowriter)
A1	1053488	Space Bar (Included with A) (Specify Color) (Flexowriter)
A1	1054152	Space Bar (Included with A) (Specify Colors) (See Keylever, Cam and Typebar Section, Figure 1, Keybutton Chart for color code)
A3	1054294	Bracket, L.H.
A4	1056003	Bracket, R.H.
A5	1053489	Screw
A6	1090290	Cotter Key
A7	1052140	Spring
A8	1090622	Washer
B	1053511	Space Keylever, Position "T", Standard
B	1057438	Space Keylever, Position "T", Double Interlock
B1	1053431	Space Cam
B2	1040699	Clevis Link
B3	1016247	Link
B4	1054248	Spacebar Bellcrank
B5	1054247	Escapement Bail
B6	1000026	Link
B7	1054993	Dummy Typebar L.H. or R.H.
B7	1054993	Dummy Typebar (Non-Escaping)
C	1054291	Keylever, Position "U", "3 Unit" Space (See Keylever Chart, Keylever Section, Page 5)
C1	1054246	Keybutton, "3 Unit" (See "Keybutton Chart", Keylever Section, Page 7)
C2	1053431	Cam (Keylever Position "U")
C2	1055168	Repeat Space Cam, Front, Single Lobe
C3	1057271	Bellcrank (Keylever Position "U")

PARTS LIST

FRIDEN

FLEXOWRITER-JUSTOWRITER

SHIFT MECHANISM

Figure 1-Shift Mechanism

FRIDEN, INC.
HOME OFFICE: SAN LEANDRO, CALIFORNIA
SALES AND SERVICE THROUGHOUT WORLD

Printed in U. S. A.

SHIFT MECHANISM - FIGURE 1

Shift Mechanism

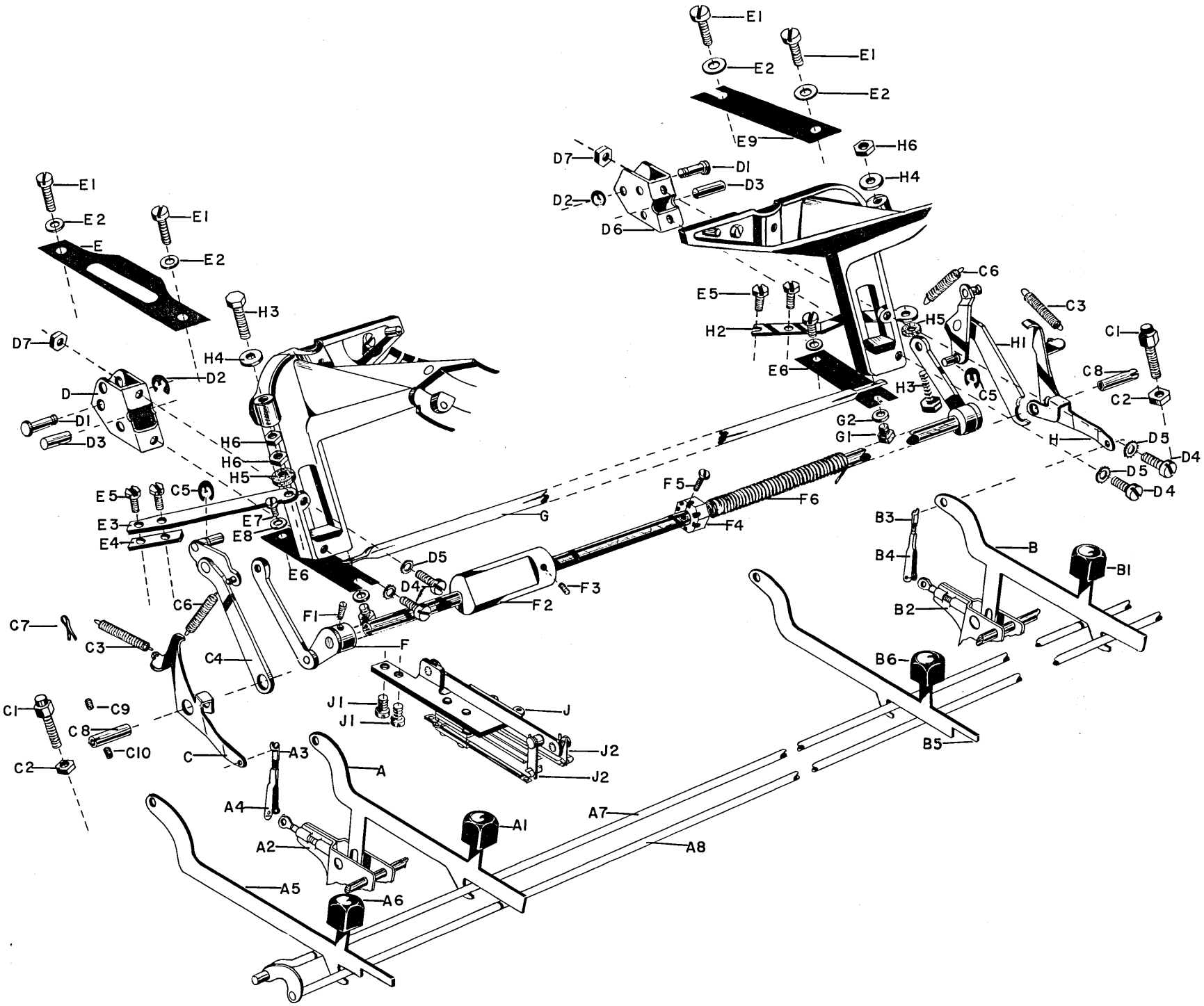

SHIFT MECHANISM - FIGURE 1

Shift Mechanism

Ref. No.	Part No.	Part Name
A	1053506	Upper Case Keylever (L.H.) (See "Keylever Chart", Keylever Section, Page 5)
A1	1054234	Keybutton Upper Case (See "Keybutton Chart", Keylever Section, Page 7)
A2	1053431	Upper Case Cam
A3	1040967	Link
A4	1040699	Clevis Link
A5	1053503	Lower Case Keylever (L.H.) (See "Keylever Chart", Keylever Section, Page 5)
A6	1054222	Keybutton Lower Case (See "Keybutton Chart", Keylever Section, Page 7)
A7	1000048	Equalizing Rod (Upper Case)
A8	1053523	Equalizing Rod (Lower Case)
B	1053518	Lower Case Keylever (R.H.) (See "Keylever Chart", Keylever Section, Page 5)
B1	1054222	Keybutton Lower Case (See "Keybutton Chart", Keylever Section, Page 7)
B2	1053431	Lower Case Cam
B3	1040967	Link
B4	1040699	Clevis Link
B5	1053517	Upper Case Keylever (R.H.) (See "Keylever Chart", Keylever Section, Page 5)
B6	1054234	Keybutton (See "Keybutton Chart", Keylever Section, Page 7)
C	1053479	Shift Operating Lever (L.H.)
C1	1040636	Adjustable Shift Stop
C2	1090034	Nut (for C1)
C3	1090162	Spring
C4	1054287	Shift Toggle Arm Assembly (L.H.)
C5	1092125	Retaining Clip
C6	1054308	Shift Spring
C7	1090290	Cotter Pin
C8	1054341	Eccentric Bearing
C9	22797	Set Screw (to lock C8)
C10	205569	Set Screw (to lock C8)
D	1040872	Shift Toggle Link Bracket, (L.H.)
D1	1053537	Stud
D2	60489	Retaining Clip
D3	1055830	Pin
D4	1090023	Screw (for D)

SHIFT MECHANISM - FIGURE 1

Shift Mechanism

Ref. No.	Part No.	Part Name
D5	1090358	Lockwasher
D6	1040871	Shift Toggle Link Bracket, R.H.
D7	1040679	Nut
E	1054440	Segment Guide, Upper, L.H.
E1	1090026	Screw
E2	1090047	Washer
E3	1000403	Basket Bracket, L.H.
E4	1054303	Spacer
E5	1043225	Screw
E6	1054438	Segment Guide, Lower
E7	1090026	Screw
E8	1090047	Washer
E9	1054439	Segment Guide, Upper, R.H.
F	1057779	Shaft and Lever Assembly (for Double Interlock)
F	1053481	Shaft and Lever Assembly
F1		Taper Pin (included in F)
F2	1040654	Cam (Shift Contact)
F3	22797	Set Screw
F4	1054192	Spring Anchor
F5	1040499	Screw
F6	1054191	Equalizing Spring
G	1000408	Segment Support Tie Bar
G1	1040502	Screw
G2	1090047	Washer
H	1053480	Shift Operating Lever, R.H.
H1	1054283	Shift Toggle Arm Assembly, R.H.
H2	1054436	Basket Bracket, R.H.
H3	1054302	Screw
H4	1090047	Washer
H5	1090619	Spacer
H6	1090034	Nut
J	1054143	Shift Contact Assembly (2-transfer) (Also, see Electrical Parts)
J1	1091369	Screw (for J)
J2	1054149	Contact Operator

PARTS LIST

FRIDEN

FLEXOWRITER-JUSTOWRITER

COLOR SHIFT MECHANISM

Figure 1-Color Shift Mechanism

FRIDEN, INC.
HOME OFFICE: SAN LEANDRO, CALIFORNIA
SALES AND SERVICE THROUGHOUT WORLD

Printed in U. S. A.

COLOR SHIFT MECHANISM - FIGURE 1

Color Shift Mechanism

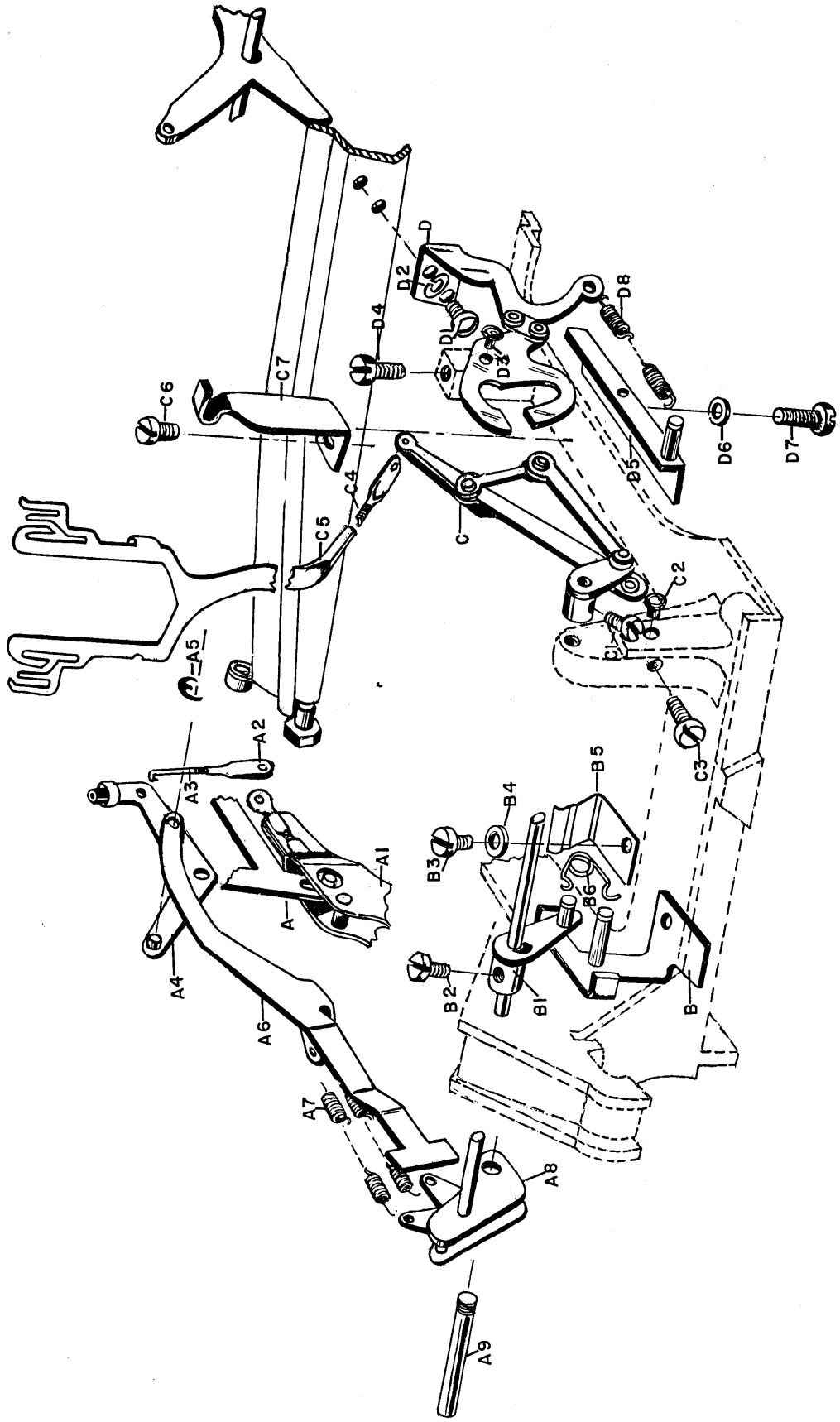

COLOR SHIFT MECHANISM - FIGURE 1

Color Shift Mechanism

Ref. No.	Part No.	Part Name
A	1054420	Color Shift Keylever
A1	1053432	Cam
A2	1040699	Clevis Link
A3	1040995	Link
A4	1054182	Bellcrank
A5	1056152	Retaining Ring
A6	1054185	"T " Lever
A7	1091455	Spring
A8	1054178	Plate & Shaft Assembly
A9	1054311	Manual Ribbon Shift Rod
B	1018757	Bracket Assembly
B1	1018758	Ribbon Position Lever
B2	1090449	Screw
B3	1090799	Screw
B4	1090254	Washer
B5	1041964	Tension Spring
B6	1000153	Spring
C	1043220	Ribbon Guide Lever Assembly
C1	1090022	Screw
C2	1090105	Stud
C3	1090799	Screw
C4	1057042	Link
C5	1054862	Ribbon Guide
C6	1090003	Screw
C7	1000085	Ribbon Guide Lever Stop
C7	1043222	Ribbon Guide Lever Stop (When new "U" Bar with Support is used 1043222 must be used)
D	1056559	Ribbon Lift Control Plate & Link Assembly
D1	196298	Screw
D2	163899	Lockwasher
D3	1090105	Stud
D4	1090799	Screw
D5	1054627	Ribbon Lift Spring Bracket
D6	1090049	Washer
D7	1090003	Screw
D8	1090164	Ribbon Lift Bar Spring

PARTS LIST

FRIDEN

FLEXOWRITER-JUSTOWRITER

CARBON RIBBON ATTACHMENT

Figure 1-Carbon Ribbon Attachment

FRIDEN, INC.
HOME OFFICE: SAN LEANDRO, CALIFORNIA
SALES AND SERVICE THROUGHOUT WORLD

Printed in U.S.A.

CARBON RIBBON ATTACHMENT - FIGURE 1

Carbon Ribbon Attachment

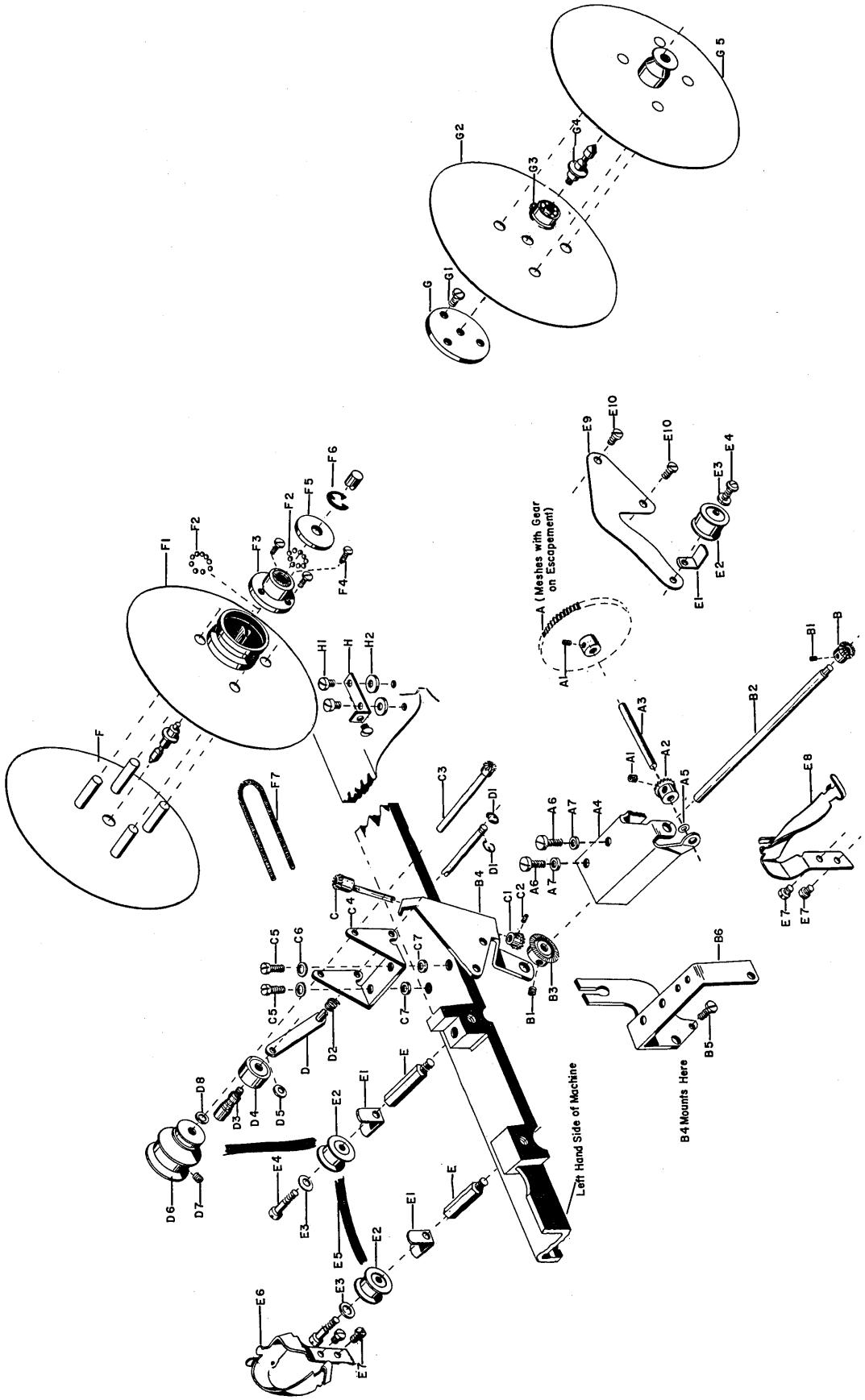

CARBON RIBBON ATTACHMENT - FIGURE 1

Carbon Ribbon Attachment

Ref. No.	Part No.	Part Name
A	1041925	Ribbon Feed Gear Assembly
A1	165556	Set Screw
A2	1042901	Gear
A3	1016297	Shaft
A4	1054917	Bracket
A5	1090394	Washer
A6	1090003	Screw
A7	1839	Washer
B	1042901	Gear
B1	165556	Set Screw
B2	1054765	Shaft
B3	1042890	Gear
B4	1054767	Bracket
B5	151633	Screw
B6	1053842	Escapement Trip Bellcrank Bracket
C	1042943	Intermediate Shaft & Gear Assembly
C1	1042891	Gear
C2	165556	Set Screw
C3	1042942	Upper Shaft & Gear Assembly
C4	1054755	Upper Bracket
C5	1090014	Screw
C6	1090199	Washer
C7	1040375	Spacer
D	1054760	Tension Lever & Shaft Assembly
D1	1054348	Retainer
D2	1054763	Spring
D3	1055361	Tension Lever Handle
D4	1055360	Pressure Roll Assembly
D5	1055366	Spacer
D6	1054992	Ribbon Feed Roll & Pulley (10 Pitch Machine)
D6	1054991	Ribbon Feed Roll & Pulley (12 & 16 Pitch Machines)
D6	1054759	Ribbon Feed Roll & Pulley (1/32 ESC. Machines)
D7	22797	Set Screw
D8	1090049	Washer
E	1054786	Stud
E1	1000541	Pulley Guide
E2	1041208	Pulley, 12 inch Carriage
E2	1055353	Pulley, 16 inch & 20 inch Carriage
E3	1090386	Washer
E4	1090353	Screw
E5	1041938	Carbon Ribbon (4 inch roll, Standard) 5/16in
E5	1042062	Carbon Ribbon (4 inch roll, 8 pt., Sharp 5/16in writing
E6	1054097	Ribbon Corner Guide (L.H.)
E7	1090003	Screw

CARBON RIBBON ATTACHMENT - FIGURE 1

Carbon Ribbon Attachment

Ref. No.	Part No.	Part Name
E8	1054094	Ribbon Corner Guide (R.H.)
E9	1054091	Ribbon Pulley Bracket
E10	1090524	Screw
F	1054998	Outside Flange & Knob Assembly L.H. (Specify Color)
F1	1042156	Shaft, Pulley & Flange Assembly (Specify Color)
F2	1091122	Ball Bearing
F3	1055229	Bearing Housing
F4	1090524	Screw
F5	1090336	Washer
F6	1092125	Clip
F7	1054783	Spring Belt
G	1042152	Plate
G1	1042744	Screw
G2	1055000	Flange (Specify Color)
G3	1054621	Bearing
G4	1042153	Shaft
G5	1054785	Outside Flange, R.H. (Specify Color)
H	1057448	Relay Cover Bracket
H1	1090799	Screw
H2	1091121	Spacer
H3	1057921	Punch Cover (not shown)

PARTS LIST

FRIDEN
FLEXOWRITER-JUSTOWRITER

CODE SELECTOR

Figure 1—Code Selector

FRIDEN, INC.
HOME OFFICE: SAN LEANDRO, CALIFORNIA
SALES AND SERVICE THROUGHOUT WORLD

Printed in U. S. A.

CODE SELECTOR - FIGURE 1

Code Selector

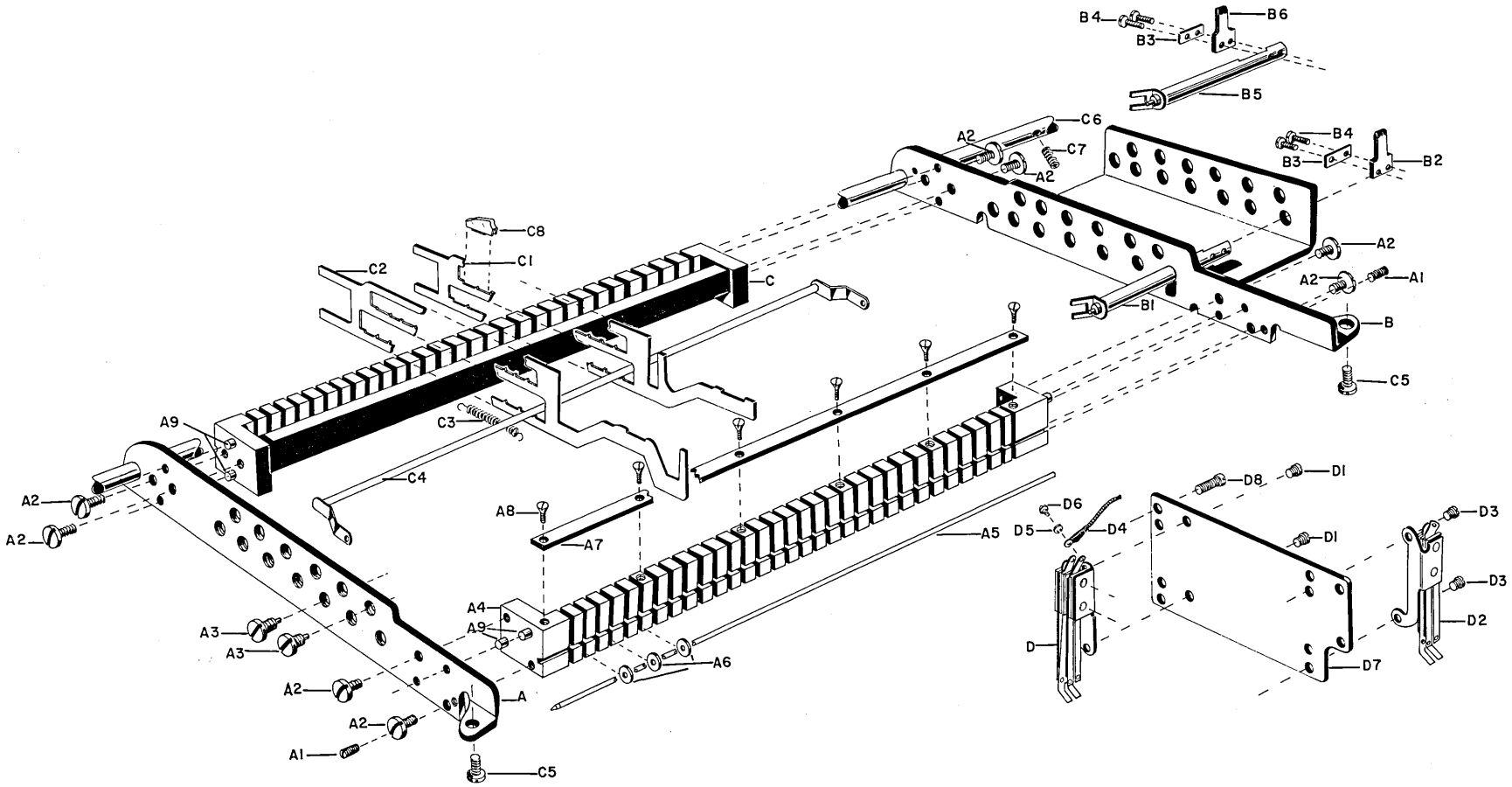

CODE SELECTOR - FIGURE 1

Code Selector

Ref. No.	Part No.	Part Name
A	1060229	L.H. End Plate Assembly
A1	1056852	Set Screw
A2	34512	Screw
A3	1060255	Pivot Stud
A4	1060236	Front Space Bar
A5	1060253	Fulcrum Wire
A6	1060252	Roller
A7	1060254	Retaining Strip
A8	38710	Screw (for A7)
A9	632	Dowel Pin
B	1060232	R.H. End Plate
B1	1060243	Lower Shaft Assembly
B2	1040570	Contact Operator for SCC
B3	1060240	Reinforcing Plate
B4	123247	Screw to mount B2 and B6
B5	1060246	Upper Shaft Assembly
B6	1019739	Contact Cam
C	1060234	Rear Space Bar
C1	1043250	Selector Slide Assembly (Front)
C1	1045229	Selector Slide Assembly, Bridge (Front)
C1	1045246	Selector Slide Assembly with Pusher, Position 5 (Front)
C1	1046046	Selector Slide Assembly, Position T (Word Space) (Front) (Justowriter Only)
C2	1043252	Selector Slide Assembly (Rear)
C2	1045230	Selector Slide Assembly, Bridge (Rear)
C3	1044183	Selector Slide Spring (Must be used with new slides)
C3	1057807	Selector Slide Spring (Must be used with old slides) (One used on new assembly)
C3	1090161	Selector Slide Spring (Heavy) (One used on old assembly)
C4	1060237	Bail
C5	28413	Selector Mounting Screw
C6	1053750	Selector Mounting Rod
C7	121521	Screw (for C6)
C8	1043255	Selector Bail Operator
C8	1046284	Selector Bail Operator (Common)
D	1053742	Selector Contact (outside - not shown)
D	1054024	Selector Contact (inside)
D1	1091817	Screw (for D)
D2	1053739	Common Contact (outside)
D3	1091817	Screw (for D2)
D4	1055944	Wire Terminal Clip
D5	1057580	Lockwasher
D6	52684	Screw
D7	1053738	Selector Contact Mounting Bracket
D8	1041198	Screw (for contact assembly)

PARTS LIST

FRIDEN

FLEXOWRITER-JUSTOWRITER

TAPE PUNCH

Figure 1—Tape Punch—Standard

Figure 2—Tape Punch—Edge Card

FRIDEN, INC.
HOME OFFICE: SAN LEANDRO, CALIFORNIA
SALES AND SERVICE THROUGHOUT WORLD

Printed in U. S. A.

TAPE PUNCH - STANDARD - FIGURE 1

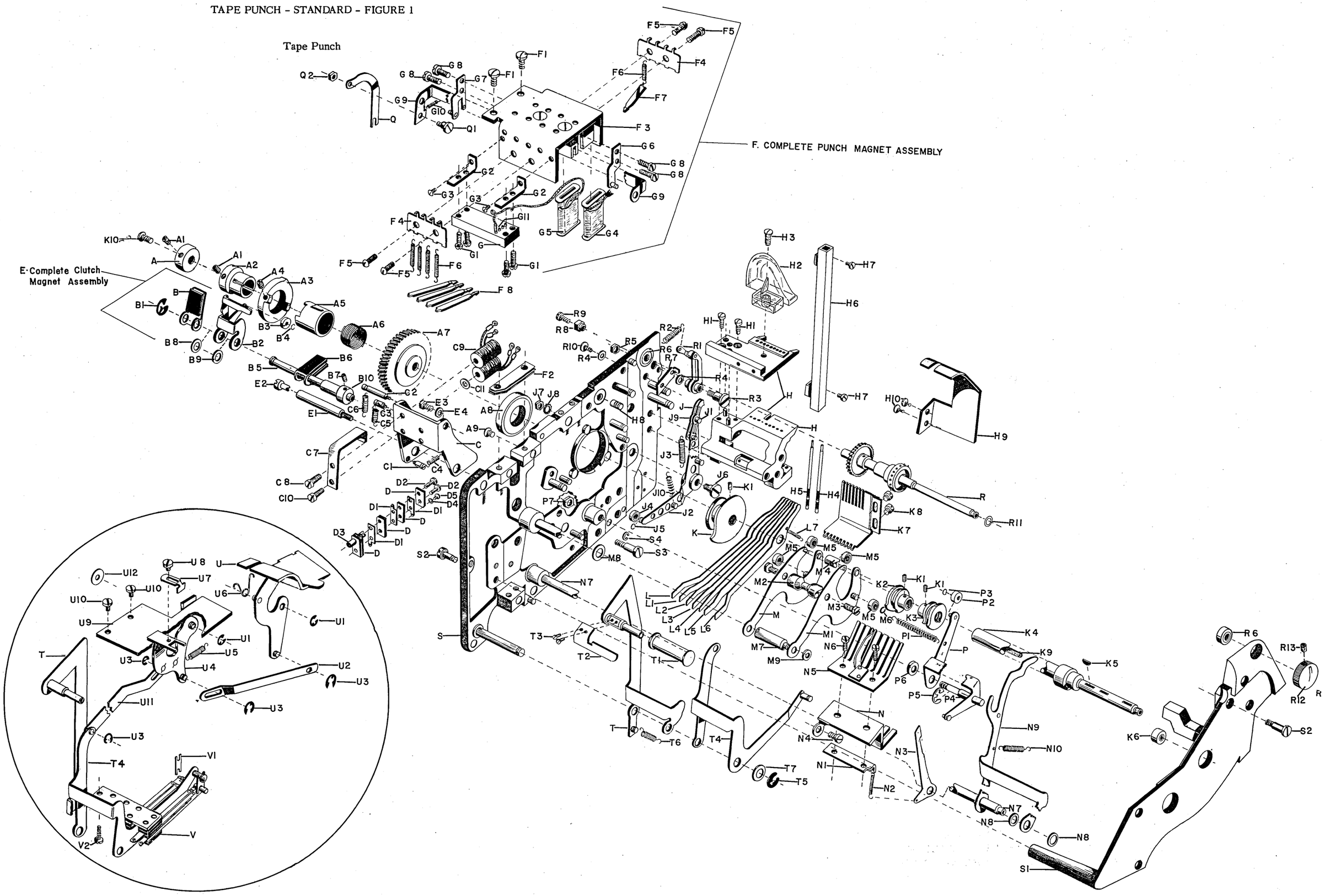

TAPE PUNCH - STANDARD - FIGURE 1

Tape Punch

Ref. No.	Part No.	Part Name
A	1058026	Clutch Detent
A1	121521	Set Screw
A2	1058027	Clutch Collar
A3	1058023	K.O. & Overtravel Cam & Stop
A4	1041020	Set Screw
A5	1058724	Clutch Sleeve
A6	1053308	Clutch Spring
A7	1058132	Gear (1000RPM)
A7	1058080	Gear (853 RPM - Justowriter)
A8	156231	Ball Bearing (Inner)
A9	155180	Screw (for A8)
B	1058089	Clutch Detent Arm
B1	1056265	Retaining Clip
B2	1058097	Knock off Arm
B3	1056994	Roller
B4	304056	Retaining Ring
B5	1058094	Pivot Shaft
B6	1058086	Clutch Armature
B7	165556	Set Screw
B8	1058105	Spacer
B9	1058095	Spacer
B10	1058099	Collar
C	1058092	Clutch Magnet Frame
C1	1058100	Spring Pin
C2	1058096	Spring Pin
C3	1058093	Spring Pin
C4	26513	Spring (for B6)
C5	138078	Spring (for B2)
C6	26040	Spring (for B)
C7	1058728	Armature Stop
C8	196398	Screw
C9	1055814	Magnet Coil (90 volt)
C9	1053321	Magnet Coil (48 volt)
C10	1040147	Screw
C11	1040146	Washer
D	1020897	Insulator
D1	1041495	Terminal
D2	173203	Screw
D3	100227	Screw Insulator
D4	1057580	Lockwasher
D5	38794	Screw

TAPE PUNCH - STANDARD - FIGURE 1

Tape Punch

Ref. No.	Part No.	Part Name
E	1058175	Complete Clutch Magnet Assembly (90 volt)
E	1058174	Complete Clutch Magnet Assembly (48 volt)
E1	1058021	Spacer (mounting stud)
E2	1058020	Screw
E3	1043225	Screw
E4	1090058	Washer
F	1044234	Punch Magnet Assembly-Complete, 6 Bit, 90 Volt, 850 Ohms
F	1044235	Punch Magnet Assembly-Complete, 7 Bit, 90 Volt, 850 Ohms
F	1044233	Punch Magnet Assembly-Complete, 5 Bit, 90 Volt, 850 Ohms
F	1044236	Punch Magnet Assembly-Complete, 7 Bit, 90 Volt, 850 Ohms
F	1044237	Punch Magnet Assembly-Complete, 8 Bit, 90 Volt, 850 Ohms
F	1044229	Punch Magnet Assembly-Complete, 5 Bit, 48 Volt, 600 Ohms
F	1044230	Punch Magnet Assembly-Complete, 6 Bit, 48 Volt, 600 Ohms
F	1044231	Punch Magnet Assembly-Complete, 7 Bit, 48 Volt, 600 Ohms
F	1044232	Punch Magnet Assembly-Complete, 8 Bit, 48 Volt, 600 Ohms
F1	34512	Screw
F2	1053261	Shim - .003in
F2	1020474	Shim - .005in
F2	1020507	Shim - .010in
F3	1040796	Magnet Yoke & Core Assembly
F4	1020313	Armature Pivot & Spring Bracket
F5	1043845	Screw
F6	1054792	Spring (90 volt)
F6	1054792	Spring (48 volt)
F7	1053986	Armature, Short Tip
F8	1053985	Armature, Long Tip
G	1044245	Terminal Block
G	1053259	Terminal Block
G1	1090559	Screw
G2	300279	Terminal Block Bracket
G3	1045556	Screw
G4	1044262	Punch Magnet Coil Assembly, Lower, 90 Volt
G4	1044263	Punch Magnet Coil Assembly, Upper, 90 Volt
G4	1044264	Punch Magnet Coil Assembly, Lower, 48 Volt
G4	1044265	Punch Magnet Coil Assembly, Upper, 48 Volt
G6	300298	Armature K.O. Bracket (front)
G7	1020452	Armature K.O. Bracket (rear)
G8	1090845	Screw
G9	1058191	Armature Knock-Off Lever
G10	1040359	Spring
G11	187243	Wire Plug Connector

TAPE PUNCH - STANDARD - FIGURE 1

Tape Punch

Ref. No.	Part No.	Part Name
H	1058123	Guide & Die Block (In Line) Not for Edge Card
H	1058143	Guide & Die Block (Advanced & Centered) Not for Edge Card
H	1058107	Guide & Die Block (Advanced Feed) Not for Edge Card
H	1040991	Guide & Die Block (Advanced Feed) Edge Card
H	1040154	Guide & Die Block - Edge Card
H1	1090014	Screw
H2	1053201	Chip Chute (Plastic)
H3	196398	Screw
H4	1057913	Code Hole Punch
H5	1057912	Feed Hole Punch
H6	1040831	Chip Chute (Lower)
H7	186393	Screw
H8	1045611	Screw (for H)
H9	1058004	Tape Stripper
H10	196298	Screw (for H9)
J	1058035	Tape Feed Arm & Pawl Assembly Complete
J1	1058041	Pin
J2	1058036	Tape Feed Arm
J3	44946	Spring
J4	1056994	Roller
J5	304056	Retaining Ring
J6	1058012	Eccentric Pivot Stud
J7	1090888	Nut (for J6)
J8	1042146	Lockwasher (for J6)
J9	1058042	Tape Feed Pawl
J10	125794	Spring (for J)
K	1058053	Cam Assembly
K1	1041743	Set Screw
K2	1040252	Punch Cam (Inner)
K3	1040251	Punch Cam (Outer)
K4	1058024	Shaft
K5	1020697	Woodruff Key
K6	304013	Ball Bearing (for outer casting)
K7	1058177	Punch Lever Guide Comb
K8	337	Screw
K9	1053999	Oil Wick (Felt)
K10	1041999	Screw (shaft oiling hole)
L	1020055	Punch Lever #1
L1	1020056	Punch Lever #2
L2	1020057	Punch Lever #3 & #4 - Feed
L3	1020058	Punch Lever #5
L4	300274	Punch Lever #6
L5	1058176	Punch Lever #7
L6	1058022	Punch Lever #8
L7	140512	Spring (for Punch Levers)

TAPE PUNCH - STANDARD - FIGURE 1

Tape Punch

Ref. No.	Part No.	Part Name
M	1058056	Punch Lever Drive Arm (Inner)
M1	1058059	Punch Lever Drive Arm (Outer)
M2	1058005	Spacer
M3	110775	Screw (for M2)
M4	1058028	Punch Bail Shaft Bushing
M5	1056994	Ball Bearing
M6	304056	Retaining Ring
M7	1040760	Drive Arm Pivot Stud
M8	1090887	Washer
M9	1090254	Washer
N	1058001	Punch Lever Comb
N1	1020468	Latch Spring Support
N2	26513	Spring (for N3)
N3	1058197	Latch Lever
N4	337	Screw
N5	1020467	Guide Comb & Stop Assembly
N6	4236	Screw
N7	1058194	Shaft (for N3)
N8	1090254	Washer
N9	1058195	Latch Restoring Bail
N10	1058794	Spring (for N9)
P	1058189	Contact Bail
P1	129637	Spring (for P)
P2	1058305	Roller (Nylon)
P3	304056	Retaining Ring (for P2)
P4	1058187	Stud (Pivot for P)
P5	1056265	Retaining Clip
P6	1058186	Spacer
P7	11598	Nut (for P4)
Q	1058193	Armature K.O. Link (connects to G9 & N9)
Q1	1058192	Eccentric Stud
Q2	7341	Nut (for Q1)
R	1058047	Pin Wheel Assembly
R	1058127	Pin Wheel Assembly (advanced - F.G.)
R1	1058029	Detent Arm
R2	1058697	Spring (for R1)
R3	304041	Eccentric Stud
R4	20038	Washer
R5	7341	Nut
R6	1057253	Ball Bearing
R7	1058008	Stop Plate (for J)
R8	1058007	Eccentric Nut (for R7)

TAPE PUNCH - STANDARD - FIGURE 1

Tape Punch

Ref. No.	Part No.	Part Name
R9	196398	Screw
R10	196298	Screw
R11	1052069	Spacer
R12	1058106	Feed Shaft Knob
R13	165556	Set Screw
S	1058063	Casting (Inner)
S1	1057920	Casting (Outer), Specify Color
S2	1045611	Screw (to mount S1)
S3	1092089	Screw (to mount punch)
S4	300249	Retaining Ring (for S3)
T	1043181	Tape Tension Control Lever (F.G. only)
T	1058073	Tape Tension Control Lever
T1	1058015	Paper Guide Roller
T2	1058016	Tape Guide
T3	1045556	Screw
T4	1053207	Tape Control Arm
T5	60488	Retaining Clip
T6	183520	Spring (for T)
T7	1058178	Washer
U	1045985	Tape Feed Pressure Arm (For SFD, SPS, SPD) Other Flexowriters can use either part.
U	1041275	Tape Feed Pressure Arm (For All Motorized & Teledata Units)
U1	25282	Retaining Clip
U2	304029	Link
U3	147297	Retaining Clip
U4	1058061	Tape Run Out Arm
U5	1091069	Spring (for U4)
U6	1091714	Spring (for U)
U7	1041274	Tape Guide (Adjustable)
U8	1041272	Screw
U9	1041273	Tape Table
U9	1055223	Tape Table (for FG)
U10	34512	Screw
U11	304764	Link
U12	193123	Shim
V	1058155	Punch Contact Assembly-Standard Also, see Electrical Parts
V	1055890	Punch Contact Assembly-Standard Also, see Electrical Parts
V1	1053110	Contact Operator (Nylon)
V2	196698	Screw
W		Parity Check Assembly (See Figure 11, Punch Parity Check, Electrical Parts Section)

TAPE PUNCH - EDGE CARD - FIGURE 2

Tape Punch

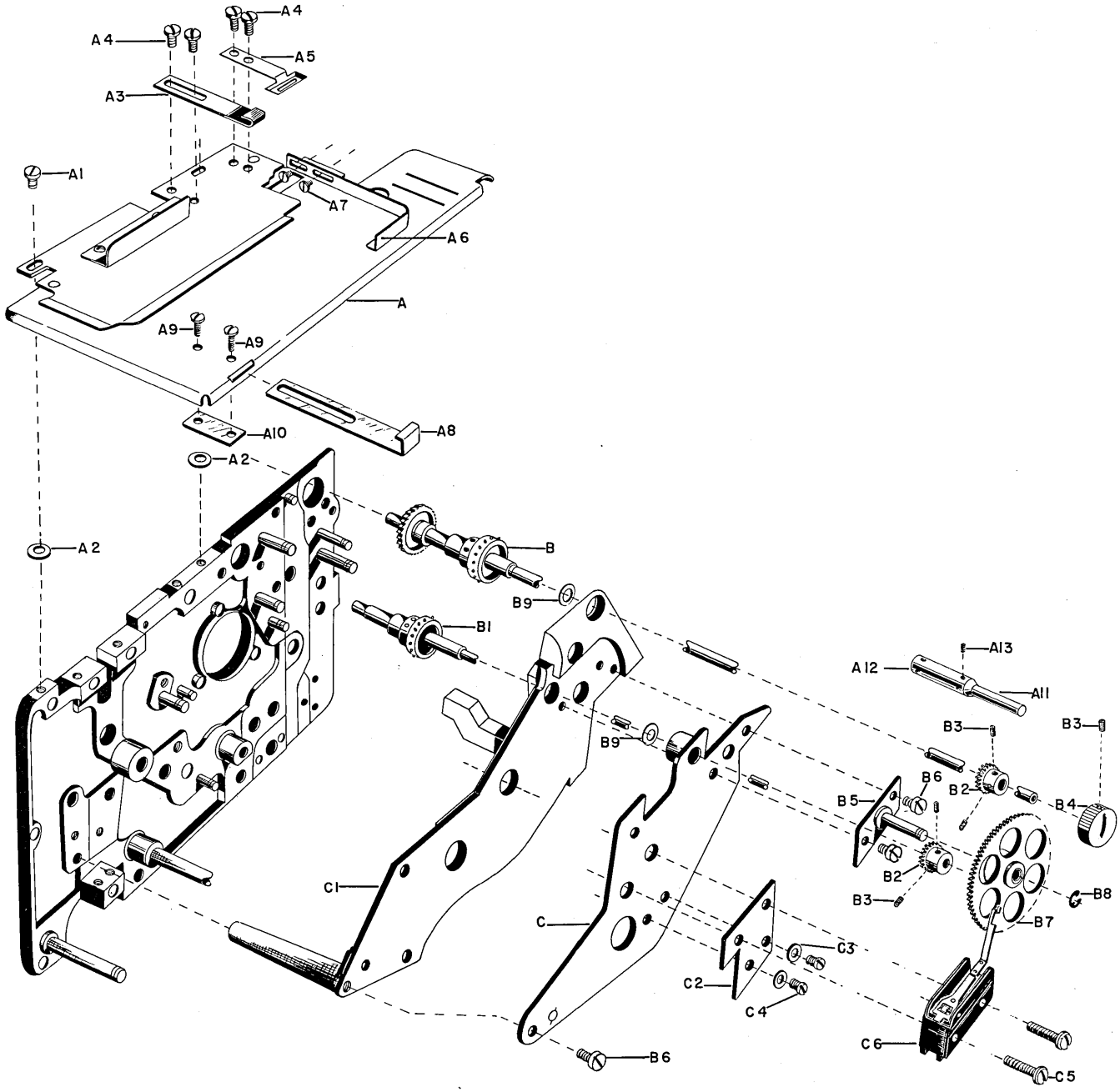

TAPE PUNCH - EDGE CARD - FIGURE 2

Tape Punch

Ref. No.	Part No.	Part Name
A	1040172	Card Guide Assembly
A1	34512	Screw (to mount A)
A2	1091046	Washer
A3	1040193	Tape Guide
A4	196298	Screw (for A3 - A5)
A5	1040198	Card Hold Down Spring
A6	1040199	Card Guide
A7	186712	Screw (for A6)
A8*	1042270	Adjustable Card Guide
A9*	120044	Screw (for A8)
A10*	1042269	Screw Plate
A11*	1042267	Shaft
A12*	1042266	Collar
A13*	165556	Set Screw
B	1040168	Pin Wheel & Feed Detent Assembly
B1	1040166	Rear Pin Wheel Assembly
B2	1040194	Gear
B3	165556	Set Screw
B4	1058106	Knob
B5	1040195	Idler Gear Shaft Plate
B6	34512	Screw
B7	1040161	Idler Gear
B8	1092125	Retaining Clip
B9	1052069	Spacer (shim)
C	1040156	Bearing Plate
C1	1040181	Casting (outer), Specify Color
C2	1040205	Switch Plate
C3	20038	Washer
C4	18491	Screw
C5	173207	Screw (for C6)
C6	1044905	Micro Switch

* for use with cards up to 5 inch width

PARTS LIST

FRIDEN

FLEXOWRITER-JUSTOWRITER

TAPE READER

Figure 1—Tape Reader—Standard

Figure 2—Tape Reader—Edge Card

Figure 3—Tab Card Reader

FRIDEN, INC.
HOME OFFICE: SAN LEANDRO, CALIFORNIA
SALES AND SERVICE THROUGHOUT WORLD

Printed in U. S. A.

TAPE READER - STANDARD - FIGURE 1

Tape Reader

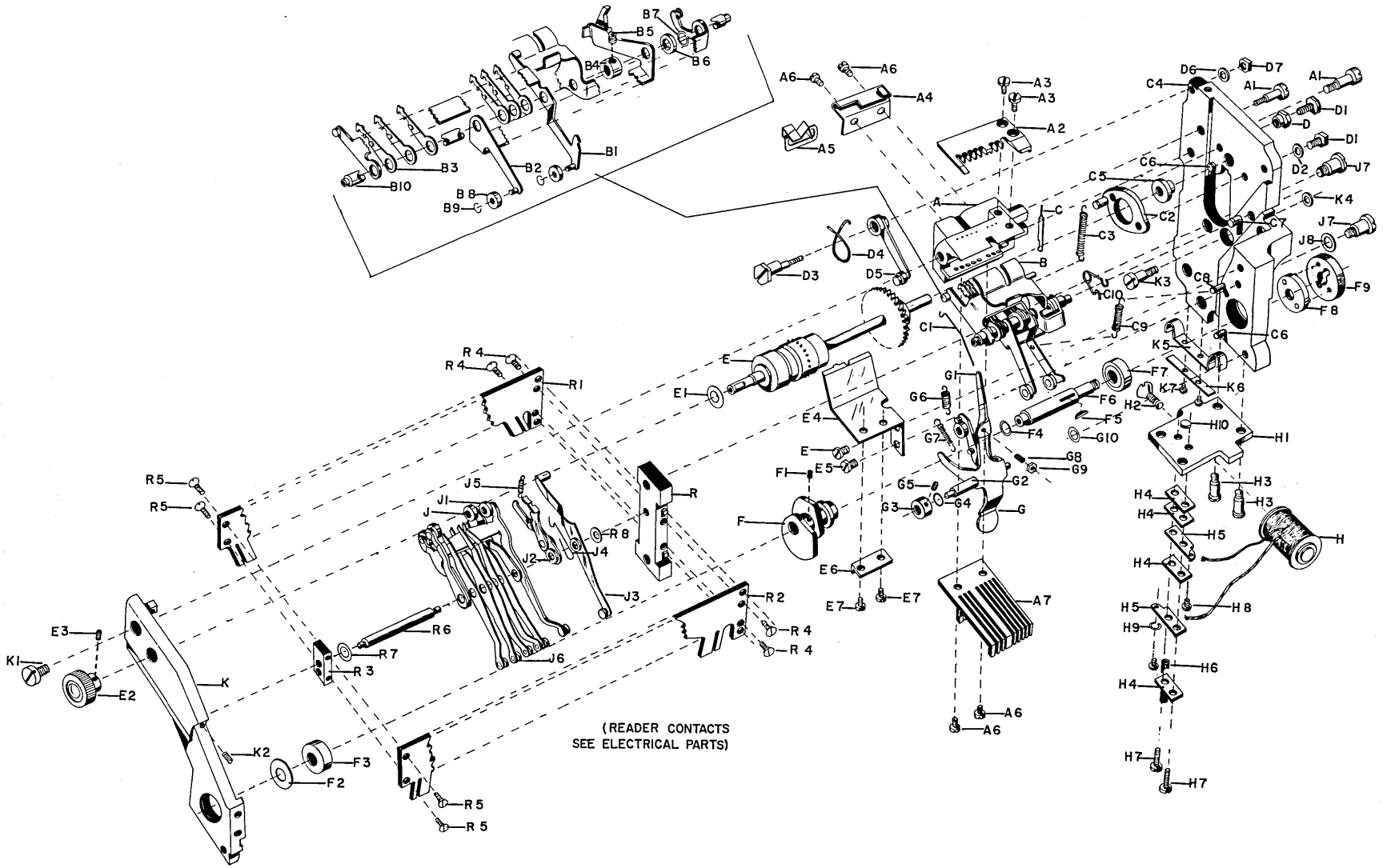

TAPE READER - STANDARD - FIGURE 1

Tape Reader

Ref. No.	Part No.	Part Name
A	1053005	Guide Block
A1	1045611	Screw (for A)
A2	1053103	Tape Support
A2	1055219	Tape Support (Advance - FG)
A3	1091042	Screw
A4	1041083	Tape Table
A5	1041082	Tape Table Guide
A6	1091042	Screw
A7	1053019	Guide Comb
B	1053077	Tape Hold Arm
B1	1049297	Interposer Bail Arm Assembly (Can be used on all Edge Card Readers - Must be used on SFD, SPS, and SPD Flexowriters when ever a Synchro-Duplex Aux. Reader is to be used.
B1	1053074	Interposer Bail Arm Assembly
B2	1053070	Tape Feed Yoke Assembly
B2	1055614	Tape Feed Yoke Assembly (Advance - FG)
B3	1053068	Interposer
B4	1091576	Interposer Shaft Collar
B5	165556	Set Screw
B6	1091547	Spacer
B7	1091577	Shim
B8	1091710	Roller
B9	304056	Clip
B10	1053067	Shaft
C	1053006	Reader Pin
C1	1091569	Interposer Spring
C2	1053063	Feed Pawl Stop
C3	49100	Spring (for B2 to C2)
C3	1046019	Spring (for B2 to C2) (Advance - FG Edge Card)
C4	1053060	Inner Casting (Includes C5 thru C8)
C5	1020079	Bearing
C6	1090132	Pin (for C3 & G6)
C7	1091562	Pin (for C10)
C8	1091563	Pin (for C9)
C9	130472	Spring (for B1)
C10	1091714	Spring (for B)
D	1020753	Eccentric Nut (for C2)
D1	186122	Screw (for C2)
D2	1091575	Washer
D3	1091549	Eccentric Screw
D4	1053113	Spring

TAPE READER - STANDARD - FIGURE 1

Tape Reader

Ref. No.	Part No.	Part Name
D5	1053013	Detent Arm
D5	1055636	Detent Arm (Advance - FG)
D6	1090965	Washer
D7	7341	Nut
E	1053136	Pin Wheel Assembly
E1	1090887	Washer
E2	1058106	Tape Feed Knob
E3	165556	Set Screw
E4	1055021	Tape Stripper Plate
E5	1091042	Screw
E6	1053036	Spring Bracket
E7	123540	Screw
F	1049261	Cam (Can be used on all Edge Card Readers - Must be used on SFD, SPS, and SPD Flexowriters whenever a Synchro-Duplex Aux. Reader is to be used
F	1053083	Cam
F1	165556	Set Screw
F2	1045136	Shim
F3	115117	Bearing (outside casting)
F4	1091517	Spacer (.005in, for F6)
F5	1053098	Key
F6	1053080	Cam Shaft
F7	155749	Ball Bearing (Inside casting)
F8	1054625	Collar
F9	1053084	Reader Drive Coupling
G	1053086	Control Armature Assembly
G1	1053088	Control Arm
G2	1053085	Control Armature Shaft
G3	1057666	Collar
G4	1052069	Spacer
G5	2165556	Set Screw
G6	1053116	Spring (for G)
G7	1044595	Spring (for G1)
G8	101017	Set Screw
G9	7341	Nut
G10	150331	Spacer
H	1057000	Magnet Assembly (90 volt)
H	1053096	Magnet Assembly (48 volt)
H1	1053092	Magnet Yoke
H2	38454	Screw (for H)
H3	1045111	Screw (for H1)

TAPE READER - STANDARD - FIGURE 1

Tape Reader

Ref. No.	Part No.	Part Name
H4	1020897	Insulator
H5	1043246	Terminal
H6	100133	Screw Insulator
H7	173202	Screw
H8	52684	Screw (Cable Connecting)
H9	1057580	Washer (for H8)
H10	12238	Residual Pin
R	1053099	Contact Bracket Tie, Inside
R1	1053023	Bracket
R2	1053024	Bracket
R3	1053021	Contact Bracket Tie, Outside
R4	194	Screw
R5	288	Screw
R6	1053030	Contact Arm Pivot Shaft
R7	45664	Washer
R8	150331	Spacer
J	1053031	Rear Contact Bail
J1	1053025	Front Contact Bail
J2	1053049	Feed Latch Arm & Lever
J3	1053046	Tape Run - Out Arm
J4	1040369	Spring (for J2)
J5	167790	Spring (for J2)
J6	1053033	Contact Lever (for 1 & 8 Position)
J6	1053035	Contact Lever (for 2 & 7 Position)
J6	1053038	Contact Lever (for 3 Position)
J6	1053040	Contact Lever (for 4 Position)
J6	1053042	Contact Lever (for 5 Position)
J6	1053044	Contact Lever (for 6 Position)
J7	44203	Screw (to mount contact Assembly)
J8	106368	Washer (for J7)
K	1053002	Outer Casting, Specify Color
K1	1053105	Screw (for K)
K2	160942	Set Screw (for B10)
K3	1053122	Screw (Reader Mounting)
K4	300249	Retaining Ring (for K3)
K5	1057452	Cable Bracket
K6	1057453	Cable Clamp
K7	1091098	Screw

Tape Reader

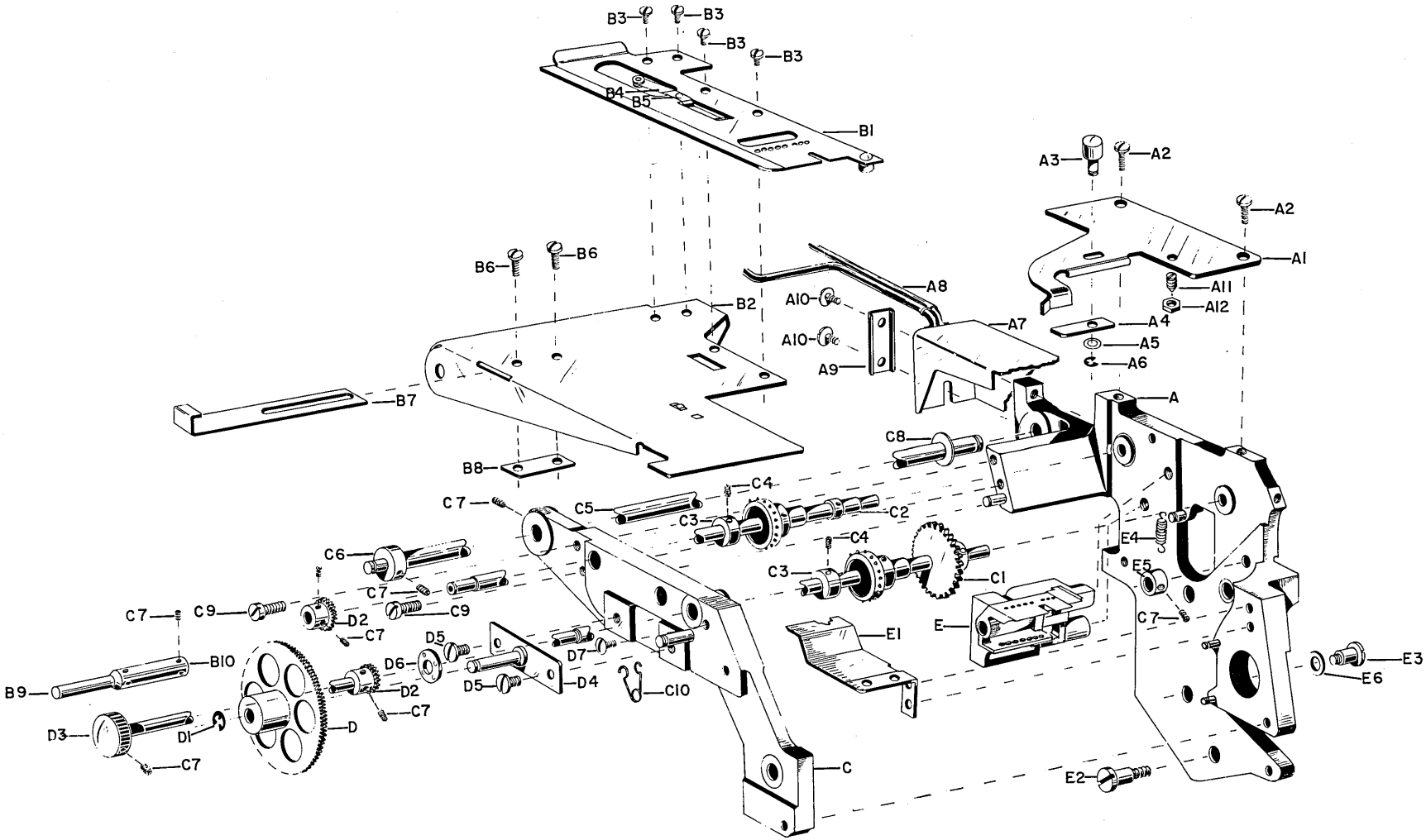
B3
B3
B3
B3
B4
B5
B1
A3
A2
A2
A1
A11
A12
A4
A5
A6
A8
A10
A10
A9
A7
B6
B6
B2
B7
B8
A
C8
C7
C5
C4
C3
C2
C4
C3
C1
E4
E5
C7
C6
C7
C9
C9
D2
C7
C7
B10
B9
D3
D1
C7
D
D6
D2
C7
D5
D5
D4
D7
C10
E1
E
C
E2
E3
E6

TAPE READER - EDGE CARD - FIGURE 2

Tape Reader

Ref. No.	Part No.	Part Name
A	1040029	Inner Casting
A1	1040044	Front Card Stop
A2	155180	Screw (to mount A1)
A3	1040046	Intermediate Stop Knob
A4	1040045	Intermediate Stop
A5	1040047	Spring Washer
A6	1054348	Retaining Clip
A7	1040055	Upper Cover
A8	1040049	Card Support
A9	1040050	Card Support Bracket
A10	1046011	Screw (for A7, A8 and A9)
A11	1046010	Set Screw
A12	6003024	Nut
B1	1040087	Upper Plate Assembly (Includes B4 and B5)
B2	1040022	Lower Plate Assembly
B3	186712	Screw (to mount B1)
B4	1040086	Spring
B5	1040077	Rivet
B6*	120044	Screw (for B7 and B8)
B7*	1042270	Adjustable Card Guide
B8*	1042269	Screw Plate
B9*	1042267	Shaft (Extension of C1 for Large width Cards)
B10*	1042266	Collar
C	1040031	Outer Casting
C1	1040040	Front Pin Wheel and Shaft Assembly
C2	1040036	Rear Pin Wheel and Shaft Assembly
C3	1040037	Collar (for C1 and C2)
C4	1058019	Set Screw (for C3)
C5	1040035	Pivot Shaft (for B)
C6	1040042	Collar
C7	165556	Set Screw
C8	1040065	Shim
C9	2031	Screw (to mount C)
C10	1091714	Spring (for B2)
D	1040161	Idler Gear Assembly
D1	1092125	Retaining Clip
D2	1040194	Pin Wheel Gear
D3	1058106	Knob
D4	1040195	Idler Gear Stud Assembly
D5	186759	Screw (to mount D4)
D6	1040048	Card Table Stop
D7	155180	Screw (to mount D6)

* For use with cards up to 5 inch width

TAPE READER - EDGE CARD - FIGURE 2

Tape Reader

Ref. No.	Part No.	Part Name
E	1040051	Guide Block
E1	1040043	Tape Stripper
E2	1040060	Screw (to mount Reader)
E3	1040059	Screw (to mount Contact Lever & Bracket)
E4	177658	Spring (for Tape Feed Pawl)
E5	1090534	Spacer (for Pivot Shaft)
E6	106368	Washer (for E3)

Friden, Inc.

TAB CARD READER

Figure 3

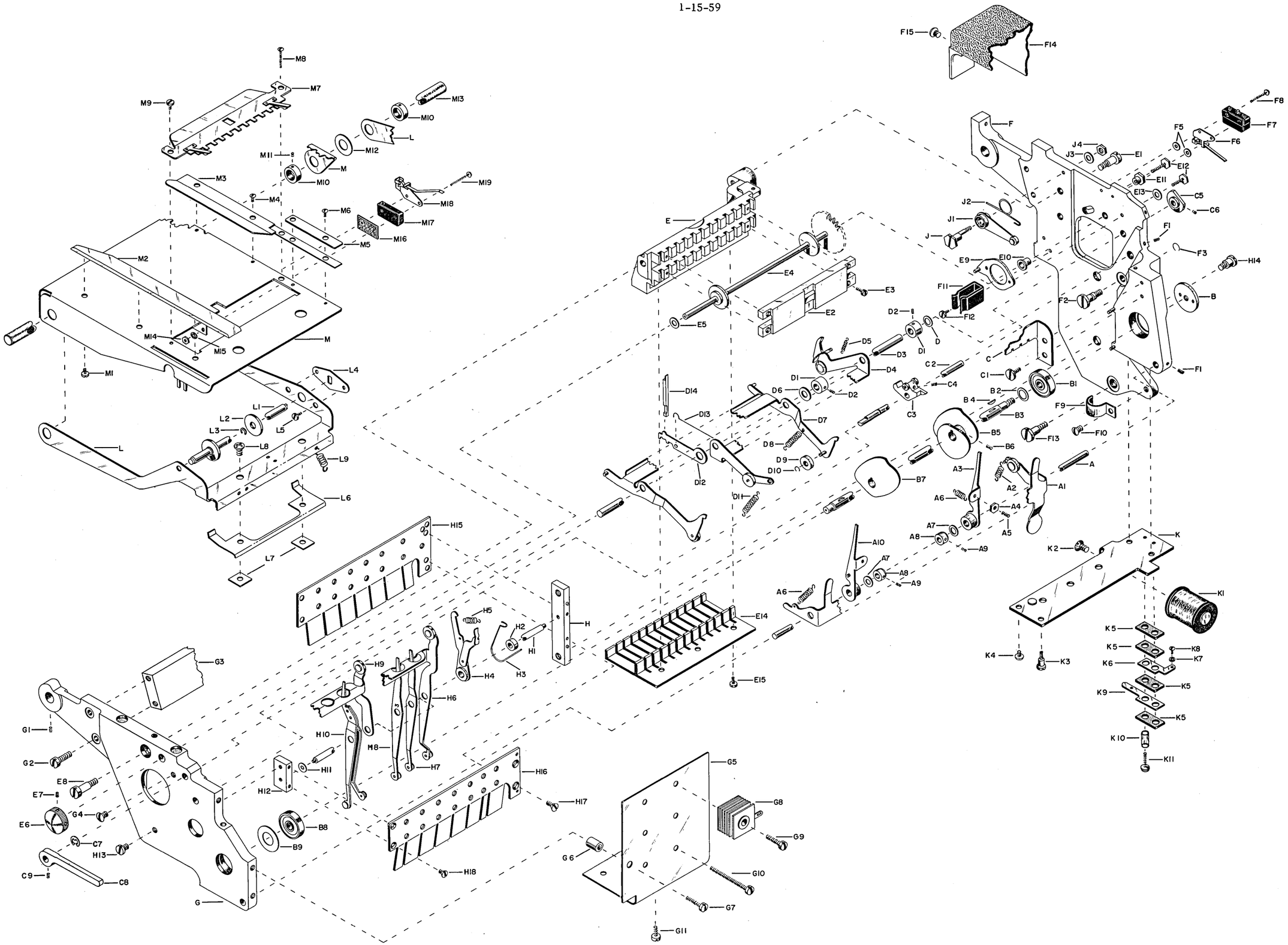
M8
M7
M9
M13
M10
L
M12
M11
M
M10
M3
M19
M4
M18
M6
M17
M16
M5
M2
M14
M15
M
M1
L4
L1
L2
L5
L3
L8
L9
L
L6
L7
F15
F14
F8
F7
F
F5
F6
J4
J3
E1
E12
E11
E13
C5
C6
J2
J1
J
F1
F3
H14
E9
E10
E
E4
E3
F11
F2
B
E2
D2
F12
E5
D
D1
D5
D3
C
D4
C2
F1
D1
C1
B1
D14
D6
D2
C4
B2
B4
F9
D13
D7
C3
B3
B5
F13
F10
D8
B6
D9
A
D10
B7
A3
A2
A1
D12
D11
A6
A4
A7
A5
A8
A9
A10
K
K2
A7
A8
A9
A6
K1
E14
H15
H5
H2
H
H1
H3
H4
K5
K5
K8
K4
K3
K7
K6
H9
H6
K5
K9
G3
E15
K5
G1
H10
H8
K10
G2
H11
H7
K11
E8
H16
H12
E7
G4
H17
G5
G8
E6
B8
G9
C7
B9
H13
G6
H18
G10
C9
C8
G7
G
G11

TAB CARD READER - FIGURE 3

Ref. No.	Part No.	Part Name
A	1049542	Control Armature Shaft
A1	1049665	Control Armature
A2	1053116	Spring for A1
A3	1053088	Inner Control Arm
A4	7341	Nut
A5	101017	Set Screw
A6	1044595	Spring for A3 and A10
A7	1052069	Spacer
A8	1040890	Collar
A9	165556	Set Screw
A10	1049659	Outer Control Arm
B	1054625	Power Shaft Collar
B1	155749	Ball Bearing (Inside Casting)
B2	1091517	Shim
B3	1049648	Cam Shaft
B4	1053098	Woodruff Key
B5	1049603	Inner Cam
B6	165556	Set Screw
B7	1049546	Outer Cam
B8	115117	Ball Bearing (Outside Casting)
B9	16594	Shim
C	1049552	Bracket for Interposer Springs
C1	196698	Screw
C2	1049581	Card Release Shaft
C3	1049686	Cam - Stop
C4	165556	Set Screw
C5	1049573	Micro Switch Cam
C6	165556	Set Screw
C7	1092125	Retaining Ring
C8	1049571	Release Lever
C9	1041743	Set Screw
D	1091577	Shim
D1	1091576	Interposer Shaft Collar
D2	165556	Set Screw
D3	1049551	Interposer Shaft
D4	1049589	Card Feed Yoke Assembly
D5	63148	Spring
D6	1090534	Spacer
D7	1049662	Interposer Bail Arm Assembly
D8	130472	Spring
D9	1091710	Roller

TAB CARD READER - FIGURE 3

Ref. No.	Part No.	Part Name
D10	304056	Retaining Ring
D11	1053116	Spring
D12	1049602	Interposer
D13	1049598	Interposer Spring
D14	1049549	Read Pin
E	1049548	Guide Block
E1	1045611	Screw to mount E
E2	1049684	Retaining Plage
E3	2650	Screw
E4	1049563	Roller Feed Assembly
E5*		
E6	1058106	Card Feed Knob
E7	165556	Set Screw
E8	1053105	Screw to mount E
E9	1053063	Feed Pawl Stop
E10	1020079	Bearing
E11	1049605	Eccentric Nut
E12	186122	Screw to Mount E9
E13	1091575	Washer
E14	1049547	Guide Comb
E15	1091042	Screw
F	1049545	Inner Casting
F1	165556	Set Screw
F2	1049619	Screw (Reader Mounting)
F3	1045727	Retaining Clip
F5	171784	Washer
F6	1049541	Actuator
F7	1057834	Micro Switch
F8		Screw supplied with Micro Switch
F9	1040062	Clamp
F10	155180	Screw
F11	1055968	Cable Clamp
F12	1091042	Screw to mount F11
F13	1040060	Screw (Reader Mounting)
F14	1049515	Upper Cover - Specify color
F15	1045547	Screw (Cover Mounting)
G	1049540	Outer Casting
G1	165556	Set Screw G3
G2	2031	Screw to mount
G3	1049543	Spacer Block
G4	155180	Screw

TAB CARD READER - FIGURE 3

Ref. No.	Part No.	Part Name
G5	1049652	Rectifier Mounting Bracket
G6	1049655	Spacer
G7	2031	Screw
G8	1049604	Rectifier
G9	1090023	Screw to mount Single Rectifier
G10	1049669	Screw to mount Double Rectifier
G11	38364	Screw to mount G5
H	1053099	Inside Contact Bracket
H1	1049533	Shaft
H2	139283	Spacer
H3	1091560	Spring for H4
H4	1053049	Feed Latch Arm & Lever
H5	167790	Spring
H6	1049525	Front Contact Bail & Roller Assembly
H7	1049607	Contact Lever
H8	1053038	Contact Lever
H9	1049527	Rear Contact Bail & Roller Assembly
H10	1049613	Double Contact Lever
H11	45664	Washer
H12	1049532	Outside Contact Bracket
H13	196299	Screw to mount H12
H14	1040059	Screw to mount H
H15	1049531	Contact Lever Bracket
H16	1049530	Contact Lever Bracket
H17	194	Screw
H18	288	Screw
J	1091549	Eccentric Screw
J1	1053013	Detent Arm
J2	1049597	Spring
J3	1090965	Washer
J4	7341	Nut
K	1049657	Magnet Yoke Plate
K1	1057000	Magnet Assembly (90 Volt)
K2	38454	Screw to Mount K1
K3	1045111	Screw
K4	1928	Screw
K5	1020897	Insulator
K6	1053126	Terminal
K7	1057580	Washer
K8	52684	Screw
K9	1043246	Terminal

TAB CARD READER - FIGURE 3

Ref. No.	Part No.	Part Name
K10	100133	Screw Insulator
K11	173202	Screw
L	1049681	Bail - Upper Feed Rollers
L1	1049564	Shaft
L2	1049569	Rollers
L3	1049565	Retaining Ring
L4	1049566	Retaining Plate
L5	1041409	Screw
L6	1049675	Card Stop
L7	1049676	Nut
L8	1045547	Screw
L9	1049553	Spring
M	1049687	Table
M1	1091068	Screw
M2	1049572	Card Guide - Outer
M3	1049580	Card Guide - Inner
M4	1045780	Screw
M5	1049574	Guide
M6	1045780	Screw
M7	1049674	Support Assembly
M8	1090559	Screw
M9	1091068	Screw
M10	1049594	Collar
M11	165556	Set Screw
M12	56955	Shim
M13	1049582	Shaft
M14		Nut - Supplied with Micro Switch
M15		Washer - Supplied with Micro Switch
M16		Flexable Insulator - Supplied with Micro Switch
M17	1057834	Micro Switch
M18	1049600	Actuator
M19		Screw - Supplied with Micro Switch

PARTS LIST

FRIDEN

FLEXOWRITER-JUSTOWRITER

CODE TRANSLATOR

Figure 1-Permutation Assembly

Figure 2-Frame Assembly

FRIDEN, INC.
HOME OFFICE: SAN LEANDRO, CALIFORNIA
SALES AND SERVICE THROUGHOUT WORLD

Printed in U. S. A.

PERMUTATION ASSEMBLY - FIGURE 1

Code Translator

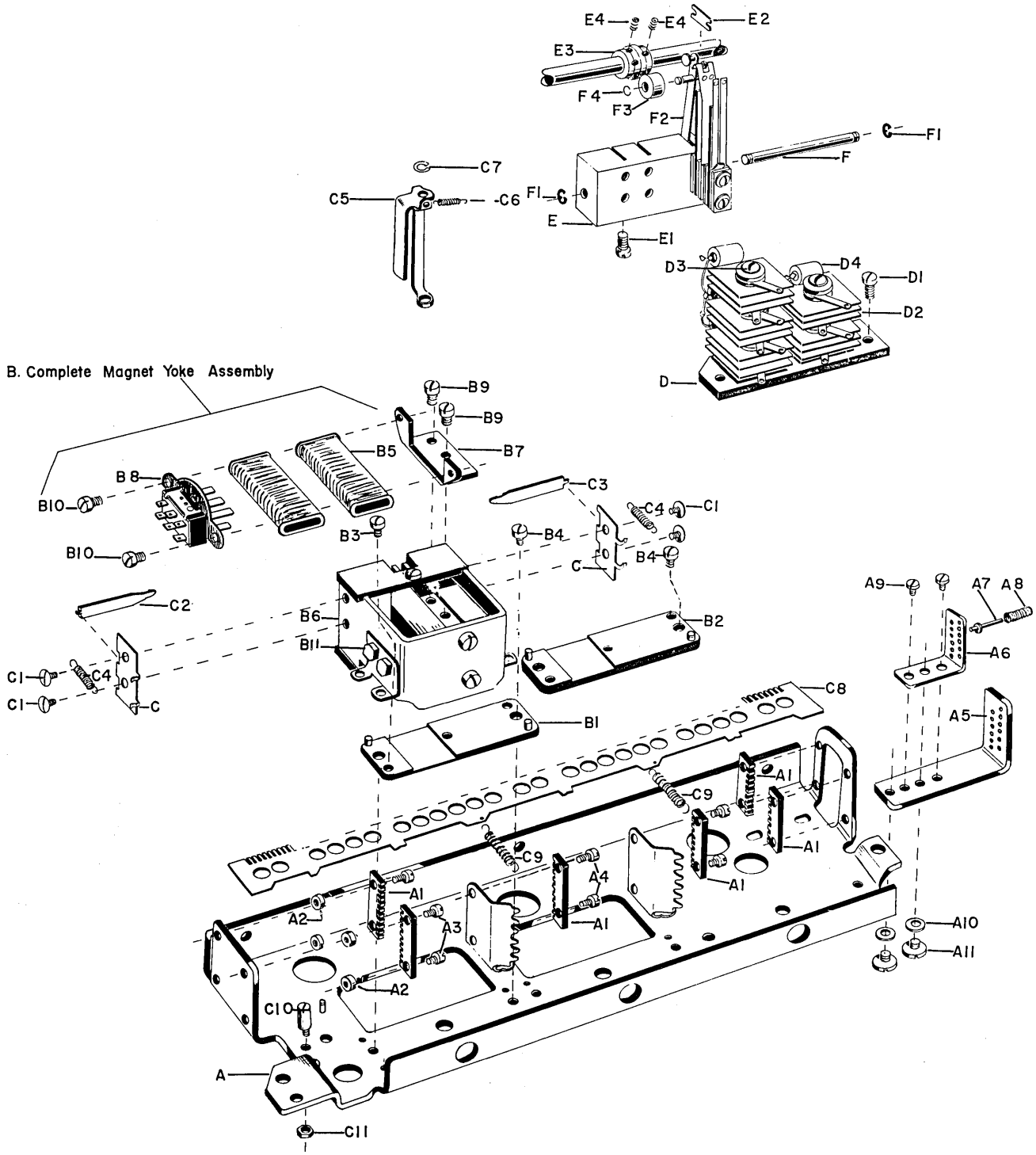

PERMUTATION ASSEMBLY - FIGURE 1

Code Translator

Ref No.	Part No.	Part Name
A	300064	Bottom Plate
A1	1056240	Permutation Bar Guide
A2	1053923	Spacer
A3	120044	Screw (for A1, L.H.)
A4	1040504	Screw (for A, Center & R.H.)
A5	1020647	Actuator Bracket
A6	1020648	Actuator Retainer
A7	1020646	Actuator
A8	1092039	Spring
A9	1090845	Screw
A10	1040505	Washer
A11	42003	Screw
B	1044682	Magnet Yoke Assembly, 1 Bit, 90 Volt, 1500 OHM
B	1044686	Magnet Yoke Assembly, 3 Bit, 48 Volt, 800 OHM
B	1043946	Magnet Yoke Assembly, 4 Bit, 90 Volt, 1500 OHM
B	1043945	Magnet Yoke Assembly, 2 Bit, 90 Volt, 1500 OHM
B	1044606	Magnet Yoke Assembly, 4 Bit, 48 Volt, 800 OHM
B	1044685	Magnet Yoke Assembly, 2 Bit, 48 Volt, 800 OHM
B	1044684	Magnet Yoke Assembly, 3 Bit, 90 Volt, 1500 OHM
B	1044683	Magnet Yoke Assembly, 3 Bit, 90 Volt, 1500 OHM
B1	1020701	Magnet Spacing Plate (L.H.)
B2	1020700	Magnet Spacing Plate (Center)
B3	1040497	Screw (to mount B6)
B4	1090003	Screw (for B1)
B4	1057233	Screw (for B2 Center)
B5	1055816	Coil Assembly, 90 Volt, 1500 OHM
B5	1055901	Coil Assembly, 48 Volt, 800 OHM
B6	1020198	Magnet Yoke & Core Assembly
B7	1020112	Terminal Bracket (Jones Plug)
B7	1043796	Terminal Bracket (Continental Plug)
B8	1020558	Jones Plug
B8	1042459	Continental Plug
B9	1090799	Screw (for B7)
B10	1090022	Screw (for B8)
B11	1056811	Screw
C	1020141	Armature Pivot & Spring Bracket
C1	186636	Screw
C2	1053986	Armature (Short Tip)
C3	1053985	Armature (Long Tip)
C4	1054792	Spring
C5	1020142	Armature Knockoff Bail
C6	1091070	Spring (for C5)
C7	25282	Retaining Clip
C8	1054895	Permutation Bar - Uncoded
C8	1057203	Coded Bar Specify Machine Serial number and Permutation Bar Position Number

PERMUTATION ASSEMBLY - FIGURE 1

Code Translator

Ref. No.	Part No.	Part Name
C9	1091995	Spring (for C8)
C10	1042317	Eccentric Stop (for Restoring Bail - Permutation Bar)
C11	1040507	Nut

Parts required for use of Rectifiers and Surge Suppressors (for Model FTM) (ALSO, SEE ELECTRICAL PARTS)

D	1055925	Rectifier Mounting Plate
D1	1090003	Screw (for D)
D2	1056787	Rectifier
D3	1055927	Screw (to mount 3 of D2)
D4	1055988	Surge Suppressor

Parts required to add Cam Operated Contact (for Models - FC, FPC, - 5R.R., FPC 8P - D.C. - Duplex, FL-Duplex, FPC-5P 3 Bank - Duplex) and Rectifier and Resistor (for FC - FPC - 5R.R.) (ALSO, SEE ELECTRICAL PARTS)

E		Timing Contact Block Assembly (See Figure 13 - Electrical Section)
E1	1040503	Screw (for E)
E2	1054149	Contact operator (nylon)
E3	1053341	Timing Cam
E4	165556	Set Screw (for E3)
E5	1056787	Rectifier
E6	1056881	Resistor (3500 Ohms) not shown
E7	173206	Screw (for E5)
E8	1040375	Spacer
F	1057100	Shaft
F1	1054348	Retaining Ring
F2	1057099	Contact Operating Arm
F3	1053342	Roller
F4	304056	Retaining Ring

Friden, Inc.

FRAME ASSEMBLY - FIGURE 2

Code Translator

FRAME ASSEMBLY - FIGURE 2

Code Translator

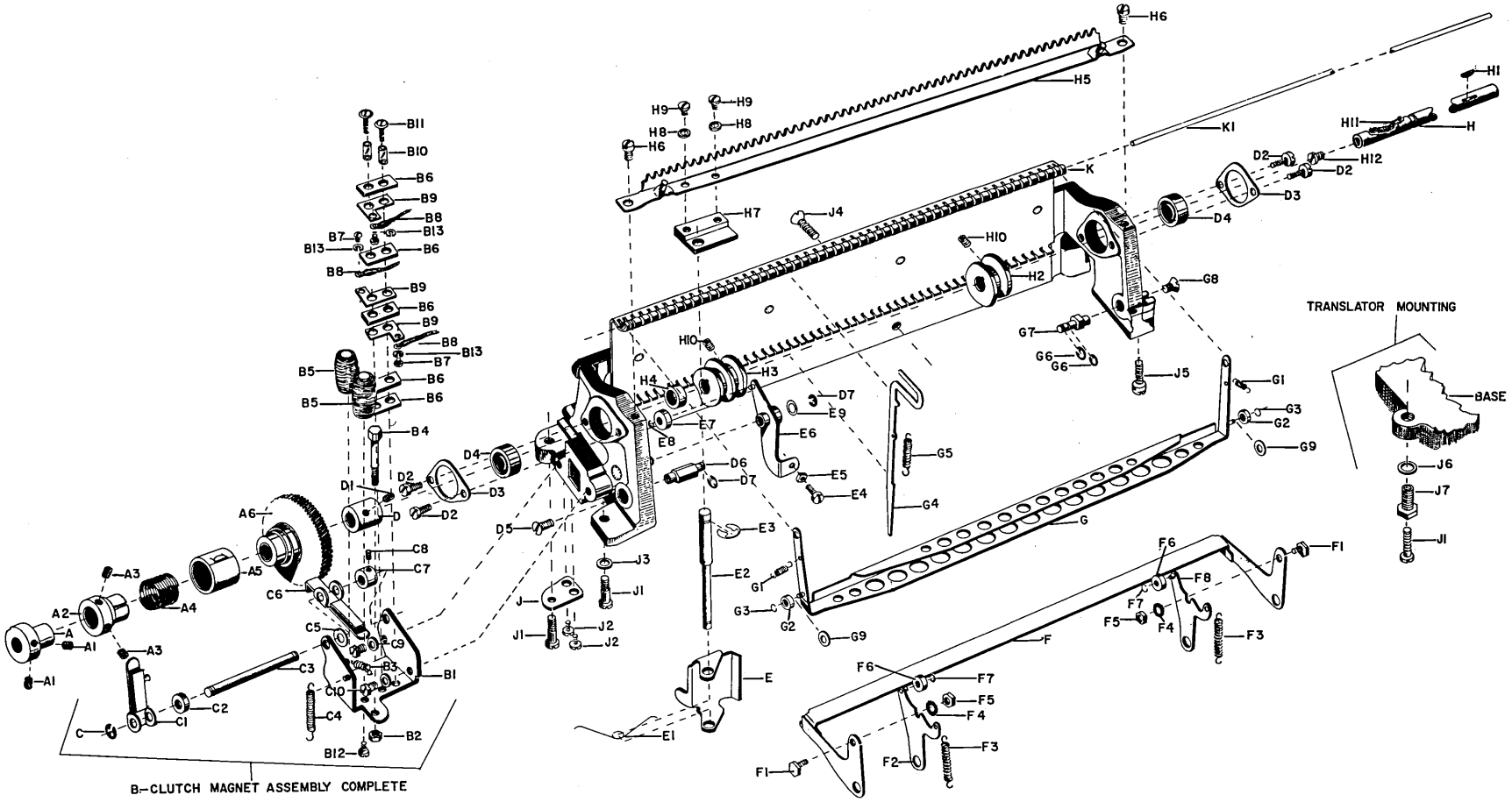

FRAME ASSEMBLY - FIGURE 2

Code Translator

Ref. No.	Part No.	Part Name
A	1053309	Clutch Detent
A1	121521	Set Screw (for A)
A2	1057862	Clutch Collar
A3	1041020	Set Screw (for A2)
A4	1053308	Clutch Spring
A5	1053262	Clutch Sleeve
A6	1055565	Gear and Hub Assembly
B	1055008	Clutch Magnet Assembly (90 Volt)
B	1055888	Clutch Magnet Assembly (48 Volt)
B1	1053320	Mounting Bracket Assembly
B2	6503	Nut
B3	26513	Spring (for C6)
B4	1055004	Adjusting Screw
B5	1055814	Coil Assembly (90 Volt)
B5	1053321	Coil Assembly (48 Volt)
B6	1020897	Insulator
B7	38794	Terminal Screw
B8	1055944	Wire Terminal
B9	304311	Terminal
B10	100354	Screw Insulator
B11	173204	Screw
B12	3500	Screw (to mount B5)
B13	1057580	Lockwasher
C	1092125	Retaining Clip
C1	304087	Clutch Detent Arm
C2	1045110	Spacer
C3	1053322	Armature Shaft
C4	26040	Spring (for C1)
C5	45690	Spacer
C6	313841	Clutch Armature
C7	304090	Armature Pivot Shaft Collar
C8	133798	Set Screw
C9	1043225	Screw (to mount B)
C10	1090058	Washer (for C9)
D	1053306	Spacer
D1	165556	Set Screw
D2	38574	Screw (for D3)
D3	1020169	Bearing Retainer
D4	1020583	Ball Bearing
D5	4636	Screw (for D6)
D6	1092000	Eccentric Pivot
D7	25282	Retaining Clip

FRAME ASSEMBLY - FIGURE 2

Code Translator

Ref. No.	Part No.	Part Name
E	1020787	Restoring Bail
E1	1092052	Restoring Spring (for E)
E2	300395	Restoring Bail Shaft
E3	60488	Retaining Clip (for E2)
E4	1057233	Screw
E5	1040507	Nut
E6	300390	Restoring Cam Lever Assembly
E7	1091710	Roller
E8	300254	Retaining Ring
E9	45664	Shim
F	1020665	Bail Assembly
F1	1020557	Eccentric Screw
F2	300381	L.H. Operating Arm and Stud Assembly
F3	130851	Spring
F4	1056261	Lockwasher (for F1)
F5	1040507	Nut (for F1)
F6	1091710	Roller
F7	304056	Retaining Ring
F8	300383	R.H. Operating Arm and Stud Assembly
G	300329	Seeker Restoring Bail
G1	1091759	Spring
G2	1056994	Roller (Bail Bearing)
G3	1054348	Retaining Ring
G4	1020158	Seeker
G4	1043965	Seeker (for Operating Bail)
G5	1091074	Seeker Spring
G6	25282	Retaining Clip
G7	300108	R.H. Pivot Stud
G8	4636	Screw
G9	1056995	Spacer
H	1053303	Shaft
H1	1020697	Key
H2	1055393	R.H. Cam
H3	1055392	L.H. Cam
H4	1091799	Cam Spacer
H5	1020786	Spring Support Assembly
H6	2300	Screw (for H5)
H7	1020731	Restoring Bail Mounting Plate
H8	1091061	Washer
H9	1091042	Screw
H10	165556	Set Screw (for H2 and H3)
H11	1053999	Oil Retainer (Felt)
H12	1041999	Screw

FRAME ASSEMBLY - FIGURE 2

Code Translator

Ref. No.	Part No.	Part Name
J	300407	Adjusting Plate (mounting)
J1	1091711	Screw (to mount Translator)
J2	196299	Screw (to mount J)
J3	1090622	Washer
J4	1040503	Screw
J5	443	Screw
J6	131599	Washer
J6	24090	Washer
J6	1090687	Washer
J7	1091767	Adjustable Foot Stud
K	300176	Frame Assembly
K1	1020165	Seeker Bearing

PARTS LIST

FRIDEN

FLEXOWRITER-JUSTOWRITER

JUSTOWRITER PARTS

Figure 1-Recorder

Figure 2-Computer Assembly

Figure 3-Hole Count Relay

Figure 4-Double Reader

Figure 5-Carbon Ribbon Mechanism-Reproducer

FRIDEN, INC.
HOME OFFICE: SAN LEANDRO, CALIFORNIA
SALES AND SERVICE THROUGHOUT WORLD

Printed in U. S. A.

RECORDER - FIGURE 1

Justowriter Parts

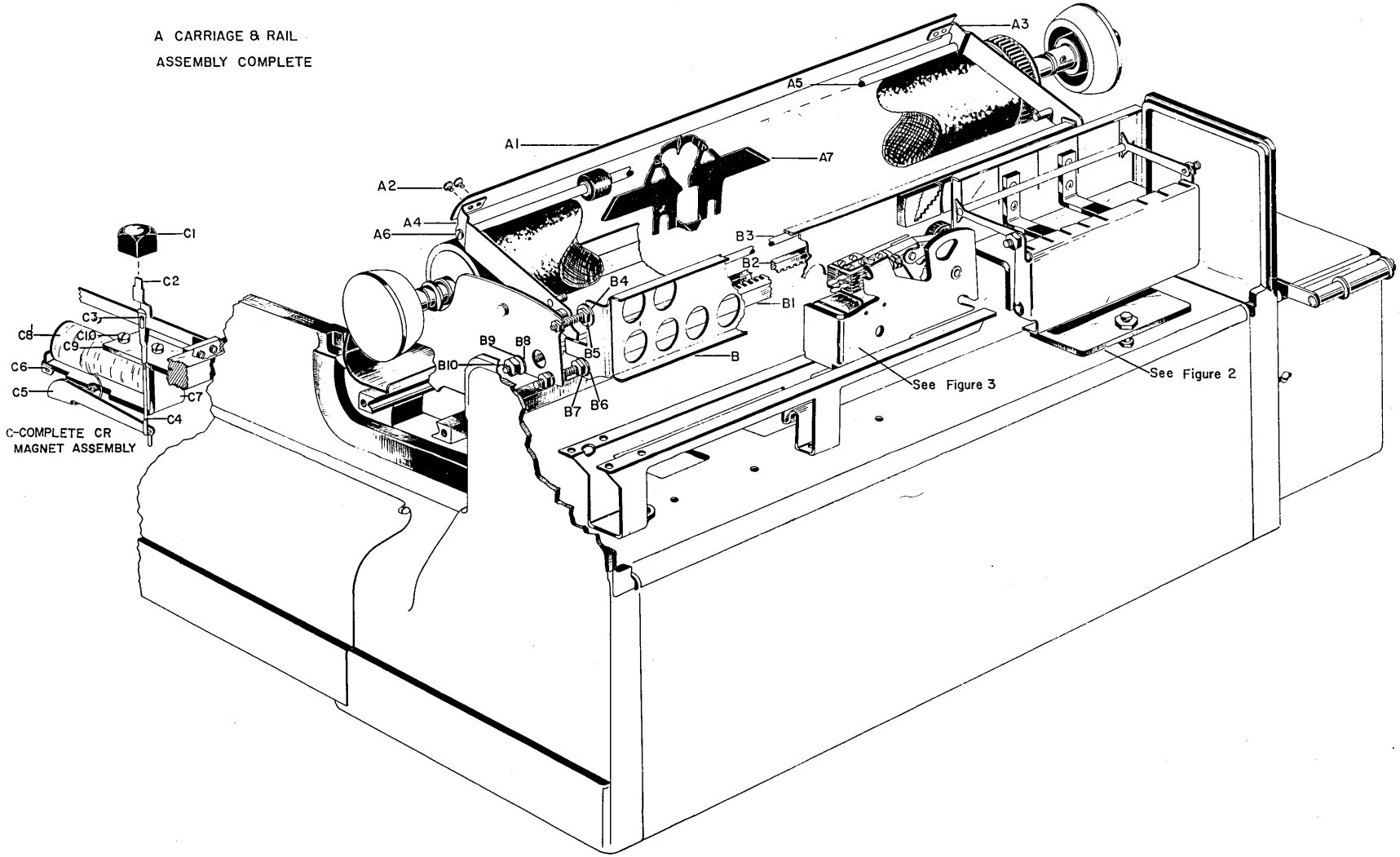

RECORDER - FIGURE 1

Justowriter Parts

Ref. No.	Part No.	Part Name
A	1053782	Carriage & Rail Assembly 12", 1/32"
A1	1056385	Unit Scale
A2	1091068	Screw (for A1)
A3	1053878	Paper Bail Arm, L.H.
A4	1053880	Paper Bail Arm, R.H.
A5	1053883	Paper Bail Shaft, 12"
A6	1090524	Screw (for A5)
A7	1016335	Card Holder
B	1054064	Computer Rack
B1	1056388	Tabular Rack, 1/32", 12"
B2	1056387	Margin Rack, 1/32", 12"
B3	1054331	Carriage Tie Rod, 12"
B4	1090254	Washer
B5	1090888	Nut for B (Top)
B6	130435	Washer
B7	1042790	Nut for B (bottom)
B8	1090534	Spacer (not shown)
B9	1090240	Washer
B10	1042790	Nut
C	1054160	Complete CR Magnet Assembly
C1	1054295	Keybutton Line Space (Use Keybutton Color Code - See Keybutton Chart, Keylever, Cam & Typebar Section, Figure 1)
C2	1054153	Keylever
C3	1053598	Clevis
C4	1054588	Link
C5	1053689	Magnet Armature Assembly
C6	165594	Armature Pivot
C7	165595	Magnet Yoke Assembly
C8	1054161	Magnet Coil Assembly
C9	1054159	Mounting Bracket
C10	186636	Screw for Mounting Complete Assembly

COMPUTER ASSEMBLY - FIGURE 2

Justowriter Parts

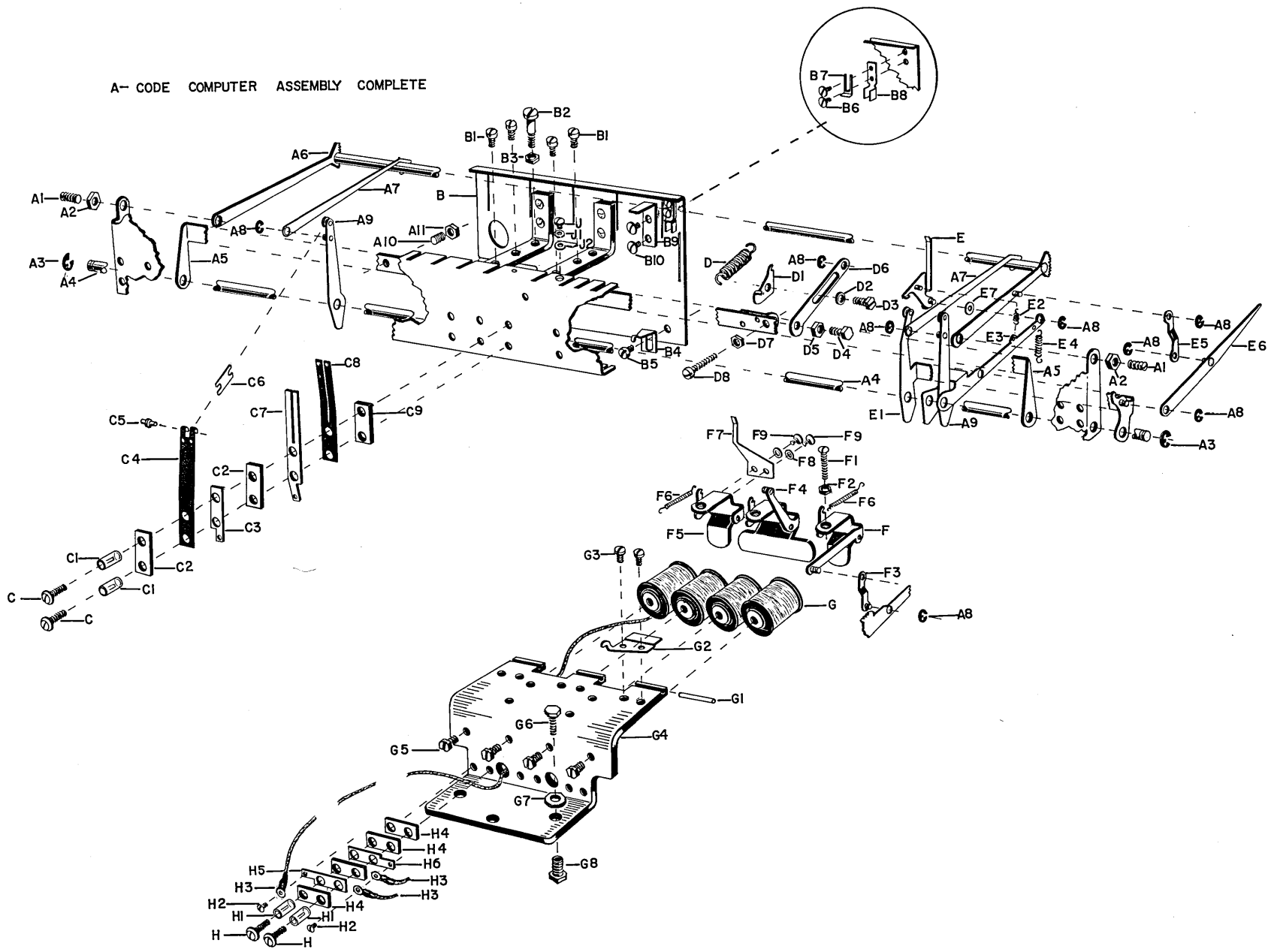

COMPUTER ASSEMBLY - FIGURE 2

Justowriter Parts

Ref. No.	Part No.	Part Name
A	1053550	Code Computer Assembly Complete
A1	1091454	Pivot Screw
A2	1090888	Nut (for A1)
A3	1092125	Retaining Clip
A4	1053573	Shaft
A5	1053557	Contact Arm Bail and Bracket Assembly
A6	1053583	Seeker Bail Assembly
A7	1053565	Seeker
A8	1054348	Retaining Clip
A9	1053566	Seeker Contact Arm
A10	22797	Screw
A11	7341	Nut
B	1053552	Frame Assembly
B1	1090003	Screw
B2	1091711	Screw
B3	1040507	Nut
B4	1056414	Spring Clip
B5	1091471	Screw (for B4)
B6	1091068	Screw (for B7 and B8)
B7	1053592	Operating Pawl Stop
B8	1053591	Operating Pawl Guide
B9	1055322	Seeker Bail Arm Assembly Stop (upper)
B10	1091068	Screw (for B9)
C	1091802	Screw
C1	100133	Screw Insulator
C2	302948	Insulator Block
C3	1053221	Terminal
C3	1054398	Terminal (for JZC)
C4	1053053	Contact Spring Assembly (make)
C4	1053108	Contact Spring Assembly (make) (for JZC)
C5	1053057	Contact Operator Shaft
C6	1054149	Nylon Contact Operator
C6	1057982	Nylon Contact Operator (for JCC)
C7	1053219	Contact Stiffener
C7	1054431	Contact Stiffener (for JZC)
C8	1053055	Contact Spring Assembly
C9	302949	Insulator Block
D	1054734	Contact Arm Bail Spring
D1	1054731	Spring Adjusting Bracket
D2	1090199	Washer
D3	151633	Screw (to hold D1)
D4	1090449	Screw (for D5)

COMPUTER ASSEMBLY - FIGURE 2

Justowriter Parts

Ref. No.	Part No.	Part Name
D5	1040491	Eccentric Nut
D6	1054732	Contact Lever Bail Link
D7	7341	Nut
D8	11118	Screw
E	1053586	Seeker Bail Operating Pawl Assembly
E1	1053569	Zone Control Bail Assembly
E2	63148	Feed Pawl Spring
E3	1053572	Seeker Bail Operating Lever
E4	1091069	Spring (B4 to E3)
E5	1053594	Zone Cam Follower Link
E6	1053595	Zone Cam Follower Assembly
E7	1055821	Spacer for E
F	1053578	Seeker Bail Operating Armature Assembly (for JSM)
F1	1054411	Screw (for F)
F2	1056260	Nut
F3	1053588	Seeker Bail Operating Link
F4	1053574	Contact Operating Bail Arm Armature Assembly (for JCM)
F5	1053576	Seeker Bail Holding Armature Assembly (for JRM)
F6	1091073	Spring (for F and F5)
F7	1053582	Seeker Bail Holding Pawl
F8	52393	Washer
F9	186712	Screw
G	1054735	Computer Coil (JRM, JSM, JCM)
G1	1053580	Armature Pivot Pin
G2	1053581	Armature Pivot Pin Retainer
G3	196298	Screw for G2
G4	1053551	Magnet Mounting Yoke
G5	77063	Screw (to mount G)
G6	1091006	Screw (to mount A)
G7	1091030	Lock - Nut
G8	1056657	Adjusting Screw
H	173202	Terminal Mounting Screw
H1	100133	Screw Insulator
H2	52684	Terminal Screw
H3	1055944	Terminal Connector
H4	1020897	Insulator
H5	1053323	Terminal
H6	1053126	Terminal

COMPUTER ASSEMBLY - FIGURE 2

Justowriter Parts

Ref. No.	Part No.	Part Name
J	1091068	Screw
J1	52393	Washer
J2	1054485	Zone Control Bail Stop

HOLE COUNT RELAY - FIGURE 3

Justowriter Parts

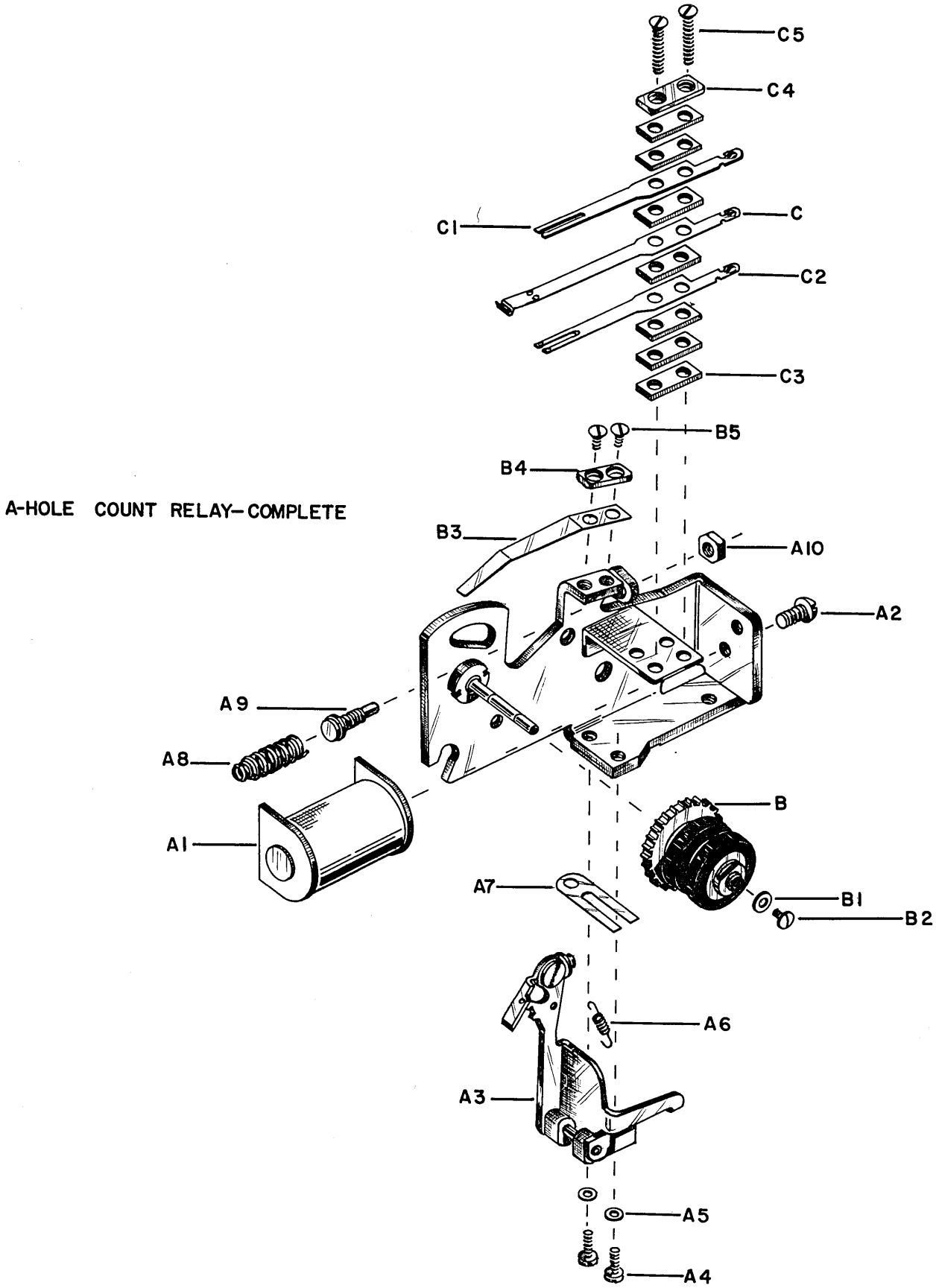

HOLE COUNT RELAY - FIGURE 3

Justowriter Parts

Ref. No.	Part No.	Part Name
A	1055400	Hole Count Relay Complete
A1	1040562	Coil
A2	1040561	Screw-To Mount A1
A3	1040563	Armature & Pawl Assembly
A4	1040565	Screw-To Mount A3
A5	1040567	Washer-For A4
A6	1057405	Spring - Armature to Pawl
A7	1040564	Shim - .012
A7	1040568	Shim - .006
A8	1057404	Spring - Armature Knock-Off
A9	1055562	Screw for A8
A10	1057406	Nut (2)-For A9
B	1057597	Cam Assembly
B1	1057403	Washer
B2	1057402	Screw - To Mount B
B3	1057407	Spring - Holding for B
B4	1043669	Cap - Contact Stack Up
B5	1040566	Screw - For B3 & 4
C	1057408	Contact - Transfer
C1	1057409	Contact - Stationery Upper
C2	1057410	Contact - Stationery Lower
C3	1043670	Insulator
C4	1043672	Cap Contact Stack Up
C5	1043671	Screw

DOUBLE READER - FIGURE 4

Justowriter Parts

DOUBLE READER - FIGURE 4

Justowriter Parts

Ref. No.	Part No.	Part Name
A	1053158	Inner Casting
A1	1054444	Tape run out arm (rear)
A2	1053187	Tape run out arm (front)
A3	302830	Stud
A4	163899	Lockwasher (for A3)
A5	7341	Nut (for A3)
A6	1053181	Shaft (for cams)
A7	1053194	Spring (for A1)
A8	1091568	Spring (for A2)
A9	1053160	Pin Wheel Assembly
A10	44203	Screws Contact Lever & Bracket Assy.
A11	106368	Washer - For A10
A12	1053122	Screw - To mount reader
A13	1053191	Clamp Cable
A14	1091515	Screw - For A13
A15	1045611	Screw for B
B	1053005	Guide Block
B1	1054442	Tape hold down arm (rear)
B2	1053195	Tape hold down arm (front)
B3	1053154	Tape Stripper (rear)
B4	1055021	Tape Stripper (front)
B5	1053162	Pivot Shaft
B6	1053157	Spring Bracket
B7	151633	Screw (for B3)
B8	13391	Spacer
B9	1053008	Tape Table
B10	105334	Screw for B9
B11	1091714	Spring for B1 & 2
C	1053172	Interposer Arm and Roller Assembly
C1	1053184	Feed Arm Assembly
C2	1053163	Tape Feed Yoke Assembly
C3	1053167	Interposer Bail Assembly
C4	1091710	Roller
C5	304056	Retaining Clip
C6	1053182	Connecting Link
C7	1054348	Retaining Ring
D	1053141	Outer Casting
D1	1045611	Screw for D
D2	1053176	Mounting Bracket (for reader magnets)
D3	1055815	Magnet Coil (for rear reader)
D4	38454	Screw

DOUBLE READER - FIGURE 4

Justowriter Parts

Ref. No.	Part No.	Part Name
D5	1057000	Magnet Coil (for front reader)
D6	160942	Set Screw for B5
D7	1045111	Screw for D2

Friden, Inc.

CARBON RIBBON MECHANISM -
REPRODUCER - FIGURE 5

Justowriter Parts

CARBON RIBBON MECHANISM - REPRODUCER - FIGURE 5

Justowriter Parts

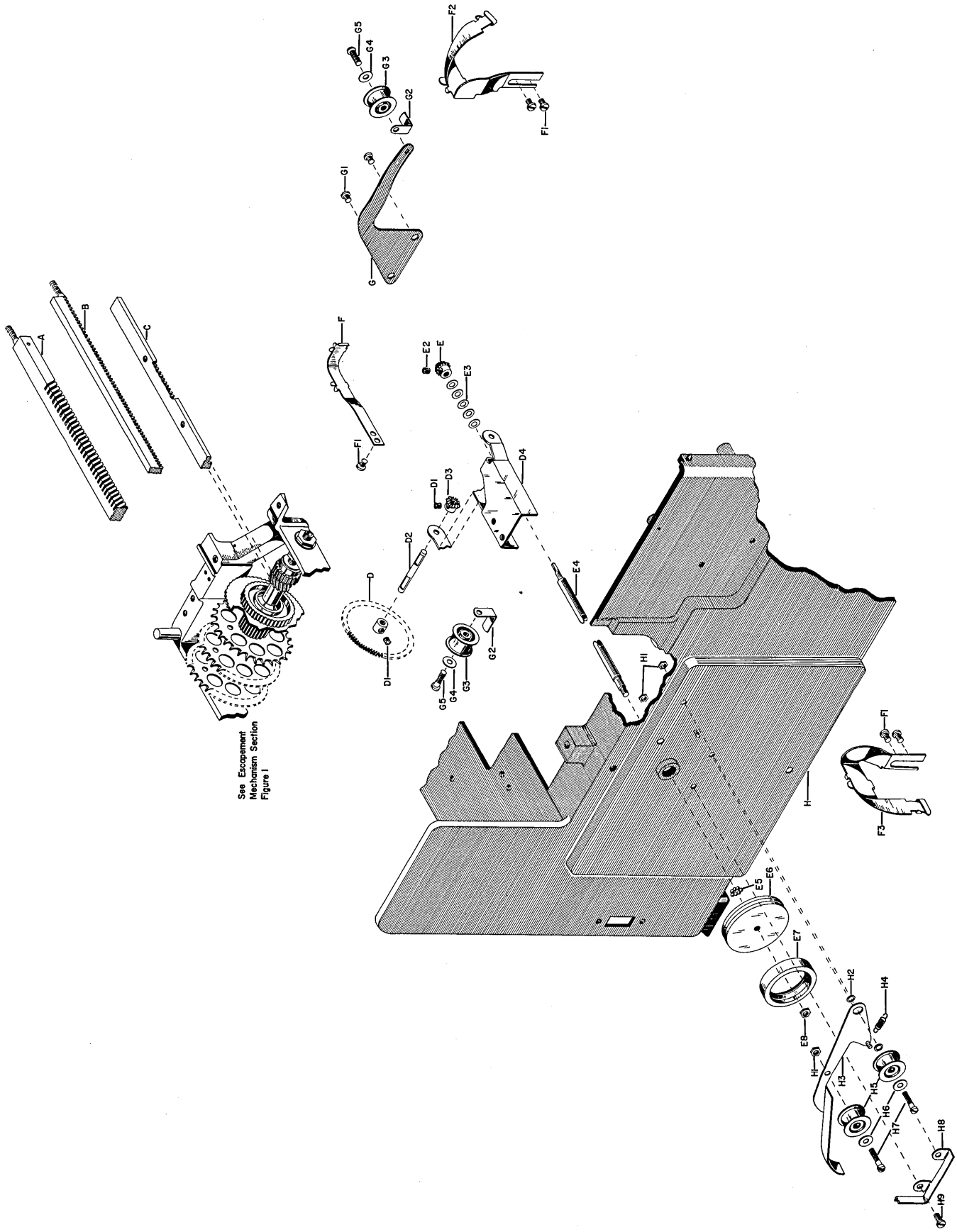

CARBON RIBBON MECHANISM - REPRODUCER - FIGURE 5

Justowriter Parts

Ref. No.	Part No.	Part Name
A	1053865	Tabular Rack, PSM, 12in.
A	1056388	Tabular Rack, Justowriter Recorder, 1/32", 12"
A	1054775	Tabular Rack, Justowriter Reproducer, 1/32", 12"
A	1056389	Tabular Rack, Justowriter Reproducer, 1/32", 1/48" 12"
A	1055974	Tabular Rack, PSM, 16" Recorder
A	1056629	Tabular Rack, Justowriter Reproducer, 1/32", 16"
A	1056433	Tabular Rack, PSM, 20"
B	1054576	Margin Rack, 1/32", Justowriter Reproducer, 12"
B	1056386	Margin Rack, 1/36", 1/48" in JU Reproducer, 12"
B	1056387	Margin Rack, 1/32", Justowriter Recorder, 12"
B	1056628	Margin Rack, 1/32", Justowriter Reproducer, 16"
C	1053862	Escapement Rack, 12", 1/32"
C	1056428	Escapement Rack, 12", 1/36"
C	1056427	Escapement Rack, 12", 1/48"
C	1055978	Escapement Rack, 16", 1/32"
C	1041486	Escapement Rack, 16", 1/36"
D	1041925	Ribbon Feed Gear Assembly
D1	165556	Set Screw for D & D3
D2	1016297	Ribbon Feed Shaft
D3	1042901	Ribbon Feed Gear
D4	1054917	Bracket
E	1042901	Ribbon Feed Gear
E2	165556	Set Screw for E
E3	1090394	Washer (Adj. Ribbon Feed Bevel Gear) - As required
E4	1054098	Carbon Ribbon Feed Shaft
E5	81140	Ball Bearing (7 required)
E6	1057854	Wheel - Ribbon Feed
E7	1057853	Tire for Ribbon Feed Wheel
E8	1090037	Nut for E4
F	1053642	Ribbon Guide - Rear
F1	1090003	Screw for F, F2, F3
F2	1054094	RH Ribbon Corner Guide
F3	1054097	LH Ribbon Corner Guide
G	1054092	Ribbon Pulley Bracket
G1	1090524	Screw for G
G2	1000541	Pulley Guide
G3	1041208	Pulley
G4	1090386	Washer
G5	1090353	Screw for G3

CARBON RIBBON MECHANISM - REPRODUCER - FIGURE 5

Justowriter Parts

Ref. No.	Part No.	Part Name
H	1054100	Carbon Ribbon Feed Plate Assembly
H1	7341	Nut for H5 & H9
H2	171784	Spacing Washer
H3	1056431	Tension Arm & Pin Assembly
H4	1090794	Spring for H3
H5	1041208	Pulley
H6	1090386	Washer
H7	1090353	Screw for H5
H8	1054611	Pulley Guide
H9	1091042	Screw for H8

PARTS LIST

FRIDEN

FLEXOWRITER-JUSTOWRITER

ELECTRICAL

Figure 1-Base Assembly
Figure 1-1-Base Assembly
Figure 2-Front Panel
Figure 3-Relays and Mounting Brackets
Figure 4-Contact Location
Figure 5-CRTC and Back Space Contacts
Figure 6-Case Shift and Punch Off — Pos. #5
Figure 7-Keylever Operated Contacts — Pos. #3
Figure 8-Selector Code Contacts
Figure 9-Selector Bridge Contacts
Figure 9-1-Selector Bridge
Figure 10-Tape Punch Contacts
Figure 11-Punch Parity Check
Figure 12-Tape Reader Contacts
Figure 12-1-Tape Reader Contacts
Figure 13-Translator — Permutation Assembly
Figure 13-1-Translator — Frame Assembly
Figure 14-Contact Operators, Wires, Flexible Tubing, and Terminals

FRIDEN, INC.
HOME OFFICE: SAN LEANDRO, CALIFORNIA
SALES AND SERVICE THROUGHOUT WORLD

Printed in U. S. A.

BASE ASSEMBLY - FIGURE 1

Electrical Parts

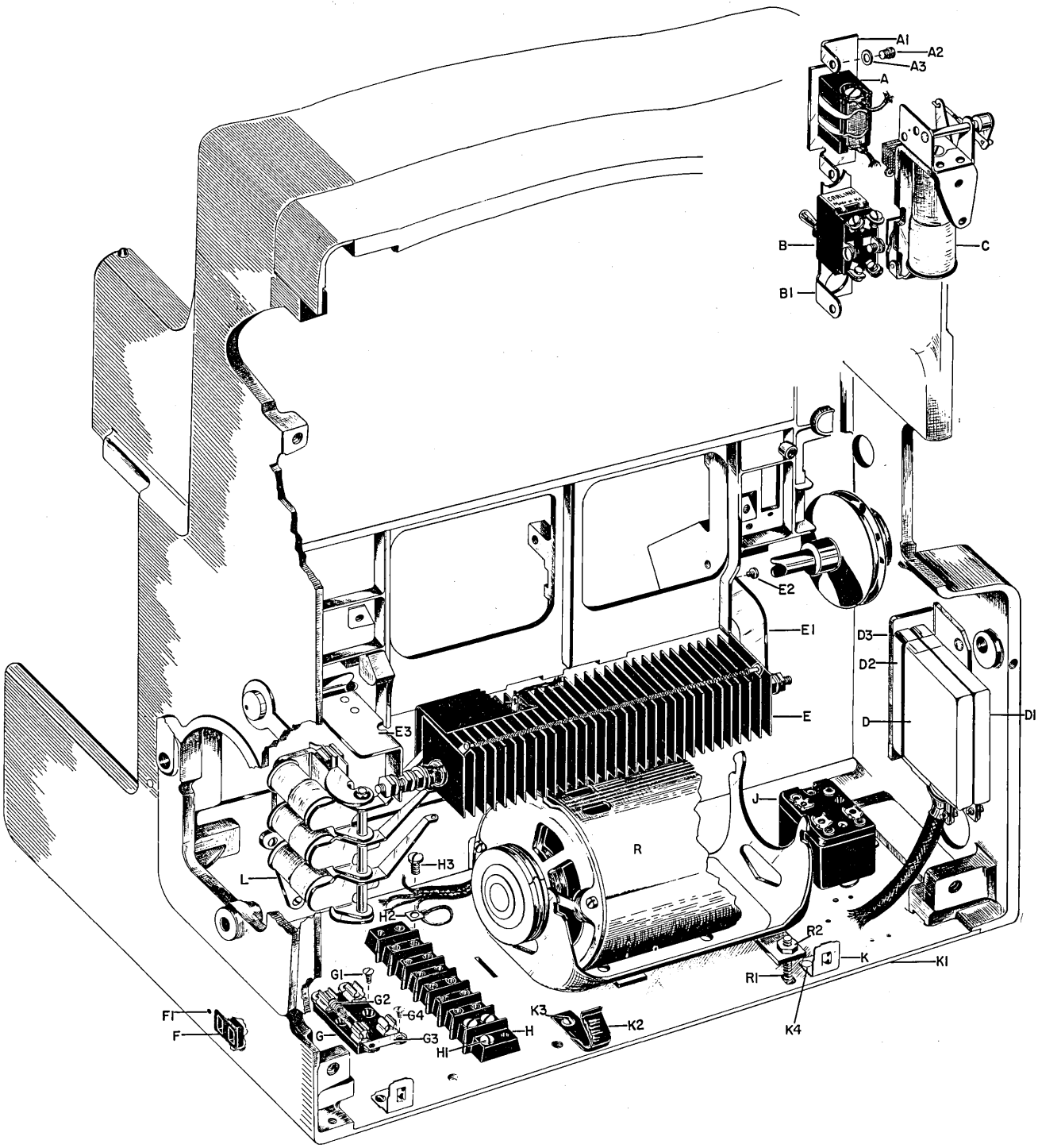

BASE ASSEMBLY - FIGURE 1

Electrical Parts

Ref. No.	Part No.	Part Name
A	1054717	Line Switch for Motor. Used on the following Models: Justowriters, FL's, FG & FC Series, FL Rec. Rep. Duplex - TLR
A	1055949	Line Switch for Motor: Used on the following Models: FPC5 Rec. Rep. 3 Bank FPC5 Rec. Rep. 4 Bank FPC5 3 Bank Duplex FPC8P S/C CTC5P 3 Bank CTC5P 4 Bank CTC8P S/C FTM Rec. Rep. Trans. Receiver FTM Trans. Receiver FPC8P S/C W/Parity SPS SFD
A	1055950	Line Switch for Motor used on following Models: FPC8P D/C Parity FPC8 CTC8P D/C SPD
A	1058567	Line Switch for Motor: Used on the following Models: FTM Receiver FTM Receiver Reproducer
A1	1054714	Switch Bracket for use with Switch 1045717 (Line Motor)
A1	1055946	Switch Bracket for use with Switch 1055949 (Line Motor) Switch Bracket for use with Switch 1055950 (Line Motor) Swtich Bracket for use with Switch 1058567 (Line Motor)
A2	163	Screw for A1 & B1
A3	1090049	Lock Washer for A2
B	1055950	Punch Control Switch DPDT For use on the following Models: FTM Rec. Rep. Trans. - Receiver FTM Trans. - Receiver FCTP 8 CTC5P 3 Bank CTC5P 4 Bank CTC8P S/C CTC8P D C SPD SPS SFD
B	1058567	Punch Control Switch DPDT For use on all FPC5P & FPC8P

BASE ASSEMBLY - FIGURE 1

Electrical Parts

Ref. No.	Part No.	Part Name
B1	1055946	Bracket used with Switch 1055950 and Switch 1058567 (when they are used as Punch Control Switches)
C		Keylock Magnet Assembly See Figures 1 and 2, Keylever, Cam & Type Bar Section for Components
D	1058145	Winchester Plug 21 Point
	1053119	Jones Plug 15 Point
D1	1058146	Winchester Plug Hood
D2	1057643	Winchester 21 Point Socket
	1054138	Jones Socket
D3	1043321	Bracket: - To Mount D2 (3 21 Point Winchester)
D3	1057644	Bracket: - To Mount D2 (2 21 Point Winchester)
D4	1041198	Screw for D3 (Not Shown)
E	1054477	Rectifier and Cable Assembly: - Used on all Models except FTM, FTCP, CTC 5-8, SFD, SPS, SPD
E	1055945	Rectifier and Cable Assembly for FTM
E	1043567	Rectifier and Cable Assembly for FTCP
E		Rectifier and Cable Assembly for CTC Models
E		Rectifier and Cable Assembly for TLR Models
E1	1053779	Rectifier Bracket RH *Not on CTC Models)
E2	1091515	Screw for E1
E3	1054006	Rectifier for Bracket LH
E4	1091229	Screw for E3 (Not Shown)
F	1054475	Receptacle 90V
F1	18491	Screw for F
G	1053670	Fuze Block
G1	194	Screw for G
G2	1054744	Fuze 1 amp
	1054872	Fuze 2 amp
G3	1055874	Jumper
G4	52684	Screw for G3
H	1043387	TC Board
H	1053669	TC Board
H1	196398	Screw for H
H2	1061389	Terminal
H3	140738	Screw for H2
J	1054753	Starting Relay
J1	1056803	Screw for J (Not Shown)
K	1055666	Bottom Plate Bracket
K1	1090652	Screw for Mounting 1055665 (Bottom Plate, Not Shown)
K2	1054397	Cable Clamp
K3	186639	Screw for K2
K4	1091766	Rivet for Mounting K to Base

BASE ASSEMBLY - FIGURE 1

Electrical Parts

Ref. No.	Part No.	Part Name
L	1054208	Escapement Magnet Assembly See Figure 3, Escapement Mechanism Section
R	1055491	Motor, 110V A.C. 50/60 Cycle
	1055645	Motor, D. C. For Components see Figure 1, Power Drive Mechanism Section
R1	1040420	Motor Adjusting Screw
R2	11598	Motor Adjusting Nut

BASE ASSEMBLY - FIGURE 1-1

Electrical Parts

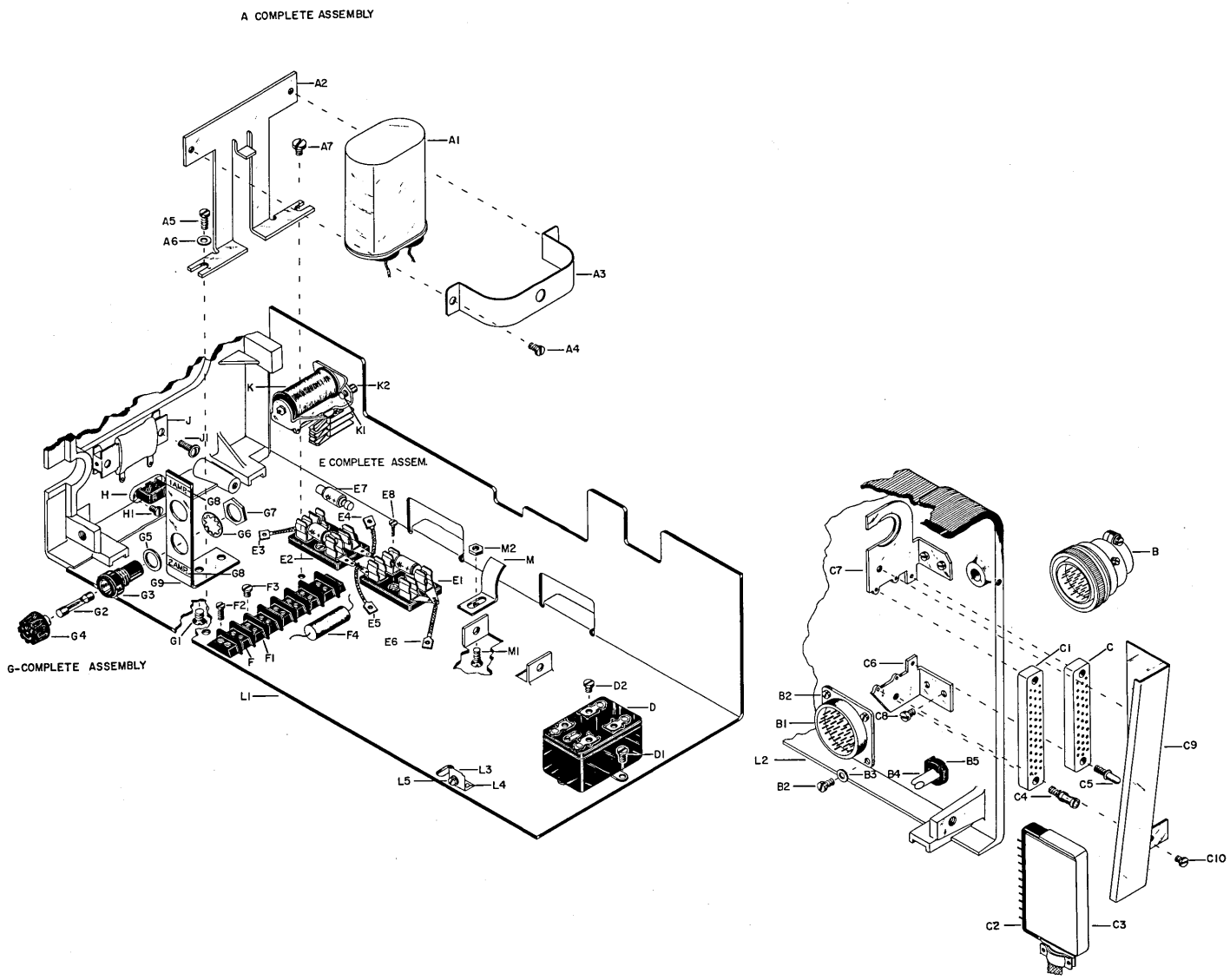

BASE ASSEMBLY - FIGURE 1-1

Electrical Parts

Ref. No.	Part No.	Part Name
A	1045375	2 MFD Capacitor Assembly (includes A11 thru A4)
A1	1045374	2 MFD Capacitor
A2	1045377	Bracket for mounting A1 to L1
A3	1045373	Bracket for mounting A1 to A2
A4	1090022	Screw for joining A3 to A2
A5	38380	Screw for mounting A2 to L1
A6	1090047	Washer for A5
A7	1043336	Stud for mounting A2 to L1
B	1040488	Cannon Jumper Assembly, Prog. (old) (27 Point) Jumper Connections: 11-12, 14-15, 21-22
B	1040916	Cannon Jumper Assembly, Prog. (new) (27 Point) Jumper Connections: 11-12, 14-15, 21-22
B	1041099	Cannon Jumper Assembly, FPC-8P Parity (27 Point) Jumper Connections: 11-12-25, 14-15, 21-22
B	1041414	Cannon Jumper Assembly, Form Feed (12 Point) Jumper Connection: 7-8
B	1042745	Cannon Jumper Assembly, Prog. Duplex (27 Point) Jumper Connections: 19-20, 22-26
B	1042775	Cannon Jumper Assembly, FL Duplex (27 Point) Jumper Connections: 13-21, 17-18-20
B	1044385	Cannon Jumper Assembly, FTCP-8 (27 Point) Jumper Connections: 11-27, 19-20
B	1044107	Amphenol Jumper Assembly, Form Feed (9 Point) Jumper Connection: H-J
B	1044658	Cannon Jumper Assembly, SFD (50 Point) Jumper Connections: 12-17, 28-29, 30-31, 11-40
B	1044659	Cannon Jumper Assembly, CTC (27 Point) Jumper Connections: 11-12, 14-15, 21-22, 23-25
B	1045043	Cannon Jumper Assembly, SPS and SPD (50 Point JL1) Jumper Connections: 12-17, 15-49, 18-38, 19-39, 21-40, 23-24, 25-36, 28-29, 30-31-44, 33-34, 45-46
B	1045044	Cannon Jumper Assembly, SPS and SPD (50 Point JL2) Jumper Connections: 11-37, 12-13, 14-15, 17-18, 19-26, 21-22, 33-36
B	1045853	Cannon Jumper Assembly, Tab Card Punch Control (50 Point) Jumper Connections: 11-27, 19-20
B	1046095	Cannon Jumper Assembly, SPS - C and SPD - C (50 Point JL4) Jumper Connections: 33-34, 41-45, 42-44, 46-49, 47-48
		MALE CANNON PLUG CONNECTORS
B	1041413	Male Cannon Plug, 12 Point, Motorized Punch, mates with 1041901 (Female Plug) and 1041412 (Female Socket)
B	1041903	Male Cannon Plug, 19 Point, Motorized Punch, mates with 1041904 (Female Plug) and 1041902 (Female Socket)
B	1042435	Male Cannon Plug, 19 Point, Motorized Punch, mates with 1041904 (Female Plug) and 1041902 (Female Socket)

BASE ASSEMBLY - FIGURE 1-1

Electrical Parts

Ref. No.	Part No.	Part Name
B	1058711	Male Cannon Plug, 27 Point, Motorized Reader, mates with 1058710 (Female Plug)
B	1043824	Male Cannon Plug, 27 Point, Motorized Punch, mates with 1043825 (Female Plug) and 1040915 (Female Socket)
B	1042766	Male Cannon Plug, 27 Point, 90° Clamp Entry, Motorized Punch, mates with 1043825 (Female Plug) and 1040915 (Female Socket)
B	1041906	Male Cannon Plug, 37 Point, Motorized Punch, mates with 1041907 Female Plug) and 1041905 (Female Socket)
B	1042452	Male Cannon Plug, 50 Point, Motorized Reader, mates with 1042453 (Female Plug)
B	1044592	Male Cannon Plug, 50 Point, Flexowriter Position N, mates with 1044591 (Female Socket)
B	1044634	Male Cannon Plug, 50 Point, Flexowriter Position Y, mates with 1044633 (Female Socket)
		MINIATURE MALE CANNON PLUG CONNECTORS
B	1042475	Miniature Male Cannon Plug, 20 Point, Motorized Punch, mates with 1042441 (Female Socket)
B	1042705	Miniature Male Cannon Plug, 30 Point, Motorized Punch, mates with 1042474 (Female Socket)
		FEMALE CANNON PLUG CONNECTORS
B	1041901	Female Cannon Plug, 12 Point, Motorized Reader, mates with 1041413 (Male Plug)
B	1041904	Female Cannon Plug, 19 Point, Motorized Reader, mates with 1041903 (Male Plug)
B	1058710	Female Cannon Plug, 27 Point, Motorized Punch, mates with 1058711 (Male Plug) and 1040487 (Male Socket)
B	1043825	Female Cannon Plug, 27 Point, Motorized Reader, mates with 1043824 (Male Plug)
B	1042289	Female Cannon Plug, 37 Point, Motorized Punch, mates with 1042288 (Male Socket)
B	1041907	Female Cannon Plug, 37 Point, Motorized Reader, mates with 1041906 (Male Plug)
B	1042453	Female Cannon Plug, 50 Point, Motorized Punch, mates with 1042452 (Male Plug)
		MINIATURE FEMALE CANNON PLUG CONNECTORS
B	1042438	Miniature Female Cannon Plug, 20 Point, Motorized Punch, mates with 1042473 (Male Socket)
B	1042442	Miniature Female Cannon Plug, 30 Point, Motorized Punch, mates with 1042444 (Male Socket)
		MALE CANNON SOCKET CONNECTORS
B1	1040487	Male Cannon Socket, 27 Point, Flexowriter, mates with 1058710 (Female Plug)
B1	1043380	Male Cannon Socket, 27 Point, (1040487 with corner removed) Flexowriter, mates with 1058710 (Female Plug)
B1	1042288	Male Cannon Socket, 37 Point, Flexowriter, mates with 1042289 (Female Plug)

BASE ASSEMBLY - FIGURE 1-1

Electrical Parts

Ref. No.	Part No.	Part Name
		MINIATURE MALE CANNON SOCKET CONNECTORS
B1	1042473	Miniature Male Cannon Socket, 20 Point, Flexowriter, mates with 1042438 (Female Plug)
B1	1042444	Miniature Male Cannon Socket, 30 Point, Flexowriter, mates with 1042442 (Female Plug)
		FEMALE CANNON SOCKET CONNECTORS
B1	1041412	Female Cannon Socket, 12 Point, Flexowriter, mates with 1041413 (Male Plug)
B1	1041902	Female Cannon Socket, 19 Point, Flexowriter, mates with 1041903 (Male Plug)
B1	1040915	Female Cannon Socket, 27 Point, Flexowriter, mates with 1043824 (Male Plug)
B1	1044893	Female Cannon Socket, 27 Point, (1040915 with corner removed) Flexowriter, mates with 1043824 (Male Plug)
B1	1041905	Female Cannon Socket, 37 Point, Flexowriter, mates with 1041906 (Male Plug)
B1	1044591	Female Cannon Socket, 50 Point, Flexowriter, position N, mates with 1044592 (Male Plug)
B1	1044633	Female Cannon Socket, 50 Point, Flexowriter Position Y, mates with 1044634 (Male Plug)
		MINIATURE FEMALE CANNON SOCKET CONNECTORS
B1	1042441	Miniature Female Cannon Socket, 20 Point, Flexowriter, mates with 1042475 (Male Plug)
B1	1042474	Miniature Female Cannon Socket, 30 Point, Flexowriter, mates with 1042705 (Male Plug)
B2	1090003	Screw for mounting B1
B2	38262	Screw for mounting B1 (SFD, SPS, SPD)
B3	1090049	Washer used with 38262 only
B4	1056154	Gray Power Cord
B4	1048656	Brown Power Cord
B5	1042219	Heyco Bushing
C	1057643	Winchester 21 Point Socket, includes C4 and C5
C1	1044404	Winchester 41 Point Socket, includes C4 and C5
C2	1058145	Winchester 21 Point Plug, includes C4 and C5
C2	1044402	Winchester 41 Point Plug, includes C4 and C5
C3	1058146	Winchester 21 Point Hood
C3	1044403	Winchester 41 Point Hood
C4	1057791	Winchester Female Mounting Pin
C5	1057792	Winchester Male Mounting Pin
C6	1043332	Rear Mounting Bracket for one 21 Point and two 41 Point Winchester Sockets
C6	1044665	Rear Mounting Bracket for two 21 Point and one 41 Point Winchester Sockets
C6	1044695	Rear Mounting Bracket for three 21 Point Winchester Sockets
C7	1044490	Front Mounting Bracket for one 21 Point and two 41 Point Winchester Sockets
C7	1044666	Front Mounting Bracket for two 21 Point and one 41 Point Winchester Sockets
C7	1044694	Front Mounting Bracket for three 21 Point Winchester Sockets
C8	1090022	Screw for mounting C6 and C7 to L2

BASE ASSEMBLY - FIGURE 1-1

Electrical Parts

Ref No.	Part No.	Part Name
C9	1044876	Drive Belt Guard
C10	196298	Screw for mounting C9 to C6 and C7
D	1054753	Starting Relay
D1	186636	Screw for mounting D to L1
D2	1056803	Terminal Screw for D
E	1044271	Rectifier Holder and Lead Assembly (90 Volt)
E	1044272	Rectifier Holder and Lead Assembly (48 Volt)
E1	1044388	Mounting Holder for Silicon Rectifier (90 Volt, R.H.)
E2	1044389	Mounting Holder for Silicon Rectifier (90 Volt, L.H.)
E2	1044270	Mounting Holder for Silicon Rectifier (48 Volt)
E3	1044700	3 in. Insulated Lead Wire (90 and 48 Volt)
E3	1044393	4 in. Insulated Lead Wire (48 Volt)
E4	1044699	5 In. Insulated Lead Wire (90 Volt)
E5	1044393	4 in. Insulated Lead Wire (90 Volt)
E6	1044699	5 in. Insulated Lead Wire (90 Volt)
E6	1044702	6 in. Insulated Lead Wire (48 Volt)
E7	1044390	Silicon Rectifier (90 Volt)
E7	1044269	Silicon Rectifier (48 Volt)
E8	196298	Screw for Mounting E1 and E2 to L1
F	1043387	Terminal Strip
F1	1043768	Terminal Strip Insulation (not shown)
F2	120044	Screw for mounting F to L1
F3	140738	Terminal Screw
F4	1044240	Capacitor Assembly
G	1055852	Fuse Post Assembly (includes G3, G4, G5, G6, and G7)
G1	99	Screw for mounting G9 to L1
G2	1054744	1 Amp Fuse
G2	1054872	2 Amp Fuse
G2	1048223	5 Amp Fuse
G3	1046491	Fuse Post Body
G4	1046492	Fuse Post Knob
G5	1046490	Rubber Washer
G6	1046489	Lock Washer
G7	1046488	Nut
G8	1044799	1 Amp Decale
G8	1044800	2 Amp Decale
G8	1044802	5 Amp Decale
G9	1055853	Fuse Mounting Bracket

Friden, Inc.

BASE ASSEMBLY - FIGURE 1-1

Electrical Parts

Ref. No.	Part No.	Part Name
H	1054475	Receptacle (90 Volt)
H1	18491	Screw for mounting H
J	1044275	10 Ohm 30 Watt Resistor
J1	173204	Screw for mounting J
K	1045042	Parity Check Relay
K1	5644	Screw for mounting K
K2	1056268	Spacer for K
L	1053767	Left Base Plate
L1	1043512	Rear Base Plate
L2	1053768	Right Base Plate
L3	1055666	Bottom Plate Bracket
L4	1091766	Rivet for mounting L3 to L1
L5	1090652	Screw for mounting Bottom Plate
M	1043906	Cable Clamp
M1	1045384	Screw for mounting M
M2	1040498	Nut for M1

FRONT PANEL - FIGURE 2

Electrical Parts

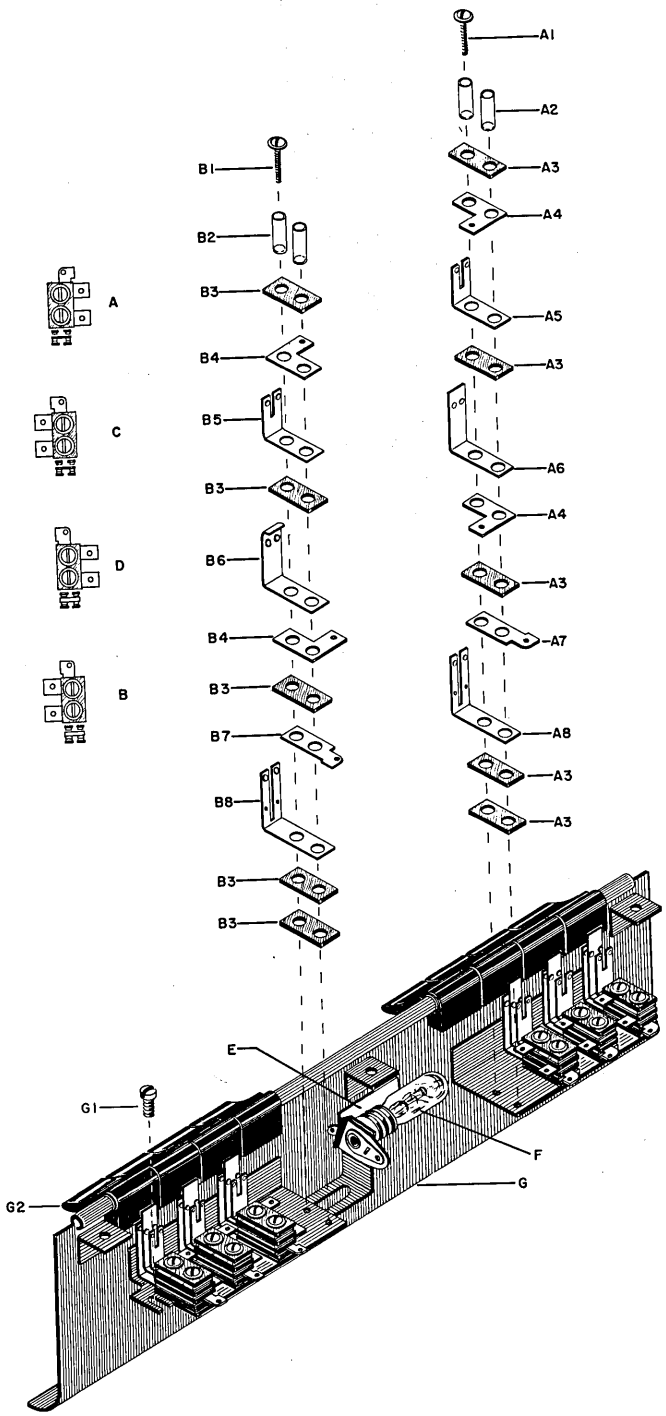

FRONT PANEL - FIGURE 2

Electrical Parts

Ref. No.	Part No.	Part Name
A	1057072	Switch Assembly - Complete
A1	1057219	Screw - Washer Head
A2	100354	Screw Insulator
A3	1020897	Terminal Insulator
A4	1043522	Terminal
A5	1053700	Contact Spring Assembly Rear
A6	1053706	Contact Spring Assembly Moveable
A7	1043523	Terminal
A8	1053702	Contact Spring Assembly Front
B	1057075	Switch Assembly Conplete
B1	1057219	Screw - Washer Head
B2	100354	Screw Insulator
B3	1020897	Terminal Insulator
B4	1043522	Terminal
B5	1053700	Contact Spring Assembly Rear
B6	1053704	Contact Spring Assembly Moveable - locking type
B7	1043523	Terminal
B8	1053702	Contact Spring Assembly Front
C	1057073	Switch Assembly
D	1057074	Switch Assembly - locking type
E	1054612	Indicator Lens - Blank
E	1056242	Indicator Lens - Printed "CP Tape"
F	148033	Bulb for E Used on FTM Models
F	1040473	Bulb for E Used on CTC Models
F	1054045	Bulb for E Used on All Other Models
G	1042100	Front Cover Plate Assembly (no switches) Flexowriter, Specify Color
G	1042102	Front Cover Plate Assembly (two switches) Communications Machine, Specify Color
	1054678	Front Cover Plate and Bracket Assembly only, Specify Color
G	1042104	Front Cover Plate Assembly (four switches) Justowriter, Specify Color

FRONT PANEL - FIGURE 2

Electrical Parts

Ref. No.	Part No.	Part Name
	1054088	Front Cover Plate and Bracket Assembly only, Specify Color
G	1042106	Front Cover Plate Assembly (six switches) Flexowriter (Automatic Line Feed) (Model FC. Rec. Rep.), Specify Color
	1053711	Front Cover Plate and Bracket Assembly only, Specify Color
G	1042108	Front Cover Plate Assembly (eight switches) Flexowriter Single & Double (Model FPC-8), Specify Color
	1057010	Front Cover Plate and Bracket Assembly only, Specify Color
G	1042110	Front Cover Plate Assembly (no switches) Flexowriter Receiver & Transmitter (Model FTM), Specify Color
	1056349	Front Cover Plate and Bracket Assembly only, Specify Color
G	1042112	Front Cover Plate Assembly (two switches) Flexowriter, Specify Color
	1055059	Front Cover Plate and Bracket Assembly only, Specify Color
G	1042114	Front Cover Plate Assembly (four switches) Flexowriter Graphotype Recorder (Model 40), Specify Color
	1055318	Front Cover Plate and Bracket Assembly only, Specify Color
G	1042116	Front Cover Plate Assembly (six switches) Justowriter, Specify Color
	1054040	Front Cover Plate and Bracket Assembly only, Specify Color
G	1042118	Front Cover Plate Assembly (eight switches) Flexowriter Programatic 3 & 4 Bank (Model FPC-5), Specify Color
	1055249	Front Cover Plate and Bracket Assembly only, Specify Color
G	1043988	Front Cover Plate Assembly (eight switches) Flexowriter (Model FTCP-8), Specify Color
	1044406	Front Cover Plate and Bracket Assembly only, Specify Color
G1	1090003	Screw to mount G to Power Frame
G2		See Contact Panel Button Chart, Keylever, Cam & Typebar Section, Figure 1

Friden, Inc.

RELAYS & MOUNTING BRACKETS
FIGURE 3

Electrical Parts

RELAYS AND MOUNTING BRACKETS - FIGURE 3

Electrical Parts

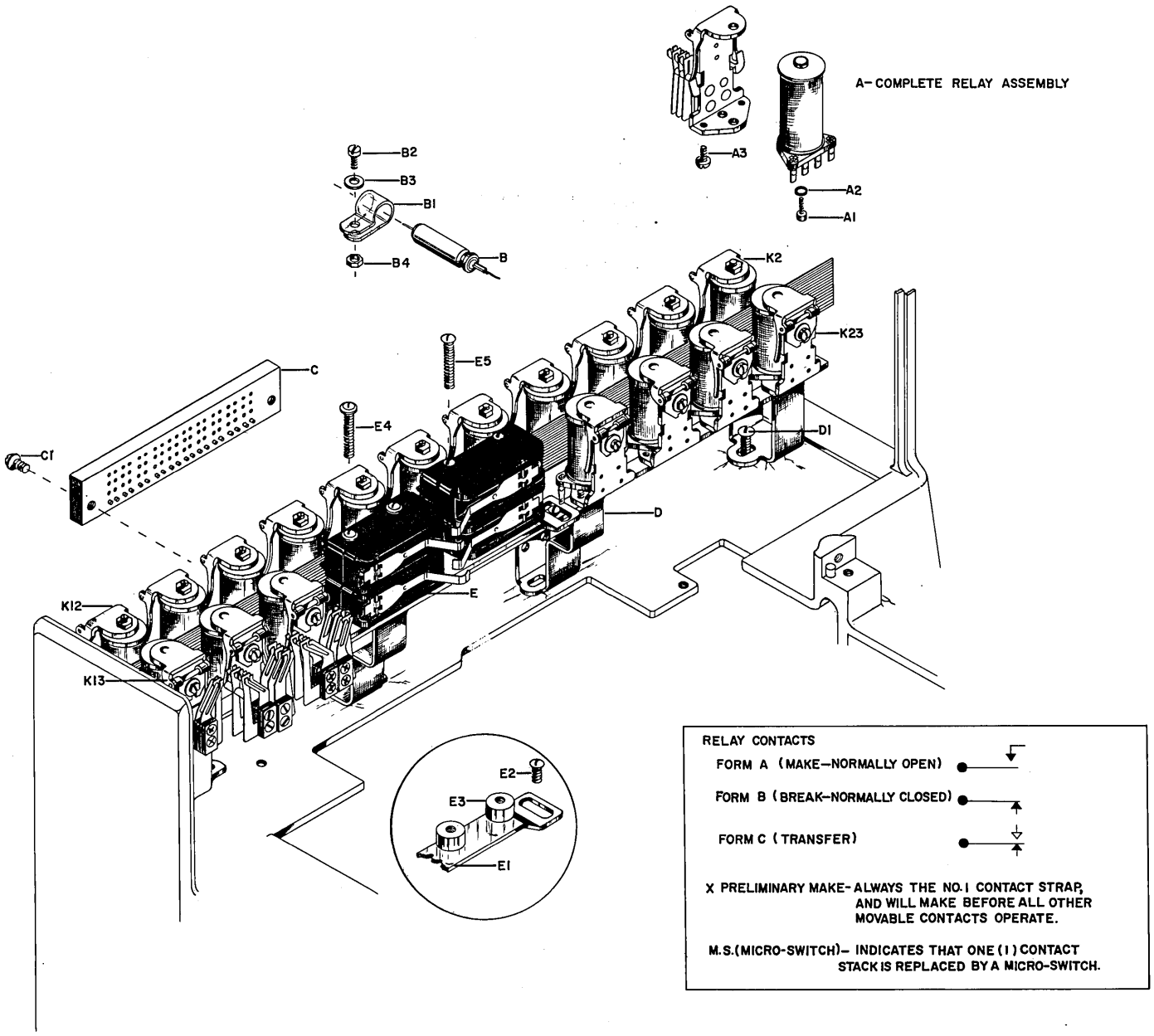

RELAYS AND MOUNTING BRACKETS - FIGURE 3

Electrical Parts

Ref. No.	Part No.	Part Name
A		Relay Assembly (See Relay and Coil Chart, Page 2, 3)
A1	1091799	Screw - Coil Mounting
A2	1057580	Washer for A1
A3	1040911	Screw for mounting Coil
A4	38262	Screw to mount Hole Counter (not shown)
A5	1090965	Washer for A4 (not shown)
B	1056936	Capacitor used in Surge Suppressor Network on Justowriter Recorder
B1	1056970	Clamp for B
B2	1090014	Screw to mount B and B1
B3	1090622	Washer for B2
B4	1090037	Nut for B2
C	1044247	Terminal Block
C	1044245	Terminal Block (TD) - Used on Justowriter Recorder-Reproducer
C	1045219	Terminal Block used on Justowriter Relay Assembly 1044053 only
C1	1091802	Screw to mount C
D	1040670	Relay Mounting Bracket
D	1040677	Relay Mounting Bracket for Justowriter
D	1043450	Relay Mounting Bracket for CTC
D1	2300	Screw to Mount D
E	1041557	Micro Switch - Standard
E	1041558	Micro Switch - with Long Operator
E	1055070	Micro Switch - with Roller Operator
E1	1040676	Micro Switch - Mounting Bracket
E1	1040674	Micro Switch - Mounting Bracket - Single Switch
E1	1040688	Micro Switch - Mounting Bracket - Two (2) Switch
E2	1056563	Screw to mount E1 (not shown)
E3	1056199	Spacer for Switches
E4	173218	Screw to mount Switches W/O Spacer
E5	1056660	Screw to mount Switches with Spacer
E6	173210	Screw to mount Single Switch (not shown)

RELAYS AND MOUNTING BRACKETS - FIGURE 3

Electrical Parts

Relay Part No.	Coil Part No.	Volts	Type Coil	Resistance	No. of Contacts & Class A	B	C
1040897	1040862	48	Single	300	2	5	-
1040898	1040863	48	Single	1300	2	-	2
1040899	1040865	48	Double	1300/1300	4	-	4
1040900	1040863	48	Single	1300	3	-	-
1040901	1040863	48	Single	1300	7 & 1X	-	1
1040902	1055658	90	Single	3600	-	-	6
1040903	1040863	48	Single	1300	10	-	-
1040904	1055657	48-90	Single	500	2	-	2
1040905	1055657	48-90	Single	500	3	-	-
1040906	1055654	90	Slug (B)	3130	1	1	-
1040907	1055656	90	Single	2000	3	3	-
1040908	1055653	90	Double	2000/3000	1	1	-
1040909	1055658	90	Single	3600	1	-	1 & 1MS
1041097	1055655	90	Single	3400	2	5	-
1041098	1055655	90	Single	3400	3	3	-
1041149	1055657	48-90	Single	500	2	4	-
1041150	1040687	90	Double	2000/2000	4	-	4
1041166	1055654	90	Slug (B)	3130	-	-	1
1041167	1055653	90	Double	2000/3000	2	5	-
1041196	1040687	90	Double	2000/2000	1	-	2
1041897	1055658	90	Single	3600	3	-	3
1042073	1044810	90	Single	5000	2	5	-
1042395	1040865	48	Double	1300/1300	-	-	4
1042396	1055656	90	Single	2000	2	4	-
1042397	1040865	48	Single	1300/1300	-	-	6
1042398	1040863	48	Single	1300	3	2	3
1042399	1040863	48	Single	1300	2	5	-
1042754	1040862	48	Single	300	2	4	-
1042767	1055653	90	Double	2000/3000	2	4	-
1042823	1055656	90	Single	2000	3	-	-
1042899	1055658	90	Single	3600	-	-	4
1043367	1055653	90	Double	2000/3000	3	-	2
1043591	1040863	48	Single	1300	1 & 1X	-	1
1043592	1040863	48	Single	1300	5	-	2
1043593	1040863	48	Single	1300	8	-	-
1043695	1040863	48	Single	1300	1	-	2
1043696	1040863	48	Single	1300	3	3	-
1043697	1040865	48	Double	1300/1300	1	1	-
1043698	1040862	48	Single	300	3	-	-
1043699	1040862	48	Single	300	2	-	2
1043774	1055656	90	Single	2000	-	-	6
1043810	1055656	90	Single	2000	3	-	3
1044091	1040863	48	Single	1300	1 & 1X	2	3
1044092	1040863	48	Single	1300	4	-	4

RELAYS AND MOUNTING BRACKETS - FIGURE 3

Electrical Parts

Relay Part No.	Coil Part No.	Volts	Type Coil	Resistance	No. of Contacts & Class A	B	C
1044561	1055653	90	Double	2000/3000	3	-	-
1044809	1040863	48	Single	1300	3	-	2
1044895	1055656	90	Single	2000	1	-	2
1045021	1055653	90	Double	2000/3000	4	-	4
1045022	1055653	90	Double	2000/3000	3	2	3
1045032	1040865	48	Double	1300/1300	3	-	-
1045097	1055653	90	Double	2000/3000	1 & 1X	2	-
1045542	1055656	90	Single	2000	5	2	2
1045762	1055656	90	Single	2000	4 & 1X	2	2
1045832	1055653	90	Double	2000/3000	1 & 1X	1	1
1045883	1055655	90	Single	3400	1 & 1X	1	1
1048275	No Repl't	90	Single	8000	3	-	2
1048276	No Repl't	90	Single	8000	1	-	2
1048277	No Repl't	90	Single	8000	-	-	2
1048278	No Repl't	90	Double	2500/2500	3	1	2
1048279	No Repl't	90	Single	4000	-	-	4
1048281	No Repl't	90	Double	2500/2500	2	-	3
1048282	No Repl't	90	Double	2500/2500	4	2	1
1048283	No Repl't	90	Single	2500	2	3	3
1048284	No Repl't	90	Double	3300/3300	10	-	-
1048516	No Repl't	90	Slub (B)	1300	-	-	2
1048517	No Repl't	90	Double	2500/2500	8	-	4
1049069	1055653	90	Double	2000/3000	7 & 1X	-	1
1049072	1055655	90	Single	3400	4	-	4
1049073	1055658	90	Single	3600	4	1	2
1049077	1055656	90	Single	2000	-	-	6
1049145	1055653	90	Double	2000/3000	3	3	-
1049282	1055655	90	Single	3400	1 & 1X	2	3
1049283	1055653	90	Double	2000/3000	1 & 1X	2	3
1049284	1055653	90	Double	2000/3000	1 & 1X	1	2
1053292	1055657	48-90	Single	500	5	-	2
1053295	1055655	90	Single	3400	10	-	-
1053296	1055656	90	Single	2000	6 & 1X	1	1
1053297	1055656	90	Single	2000	4 & 1X	1	-
1053298	1057517	48	Single	2400	12	-	-
1053299	1057518	48	Single	1600	-	-	10
1053728	1055658	90	Single	3600	3	-	-
1053729	1055658	90	Single	3600	-	-	1
1053747	1055656	90	Single	2000	1	3	-
1053748	1055655	90	Single	3400	8	-	-
1054054	1055656	90	Single	2000	5	-	2
1054055	1055655	90	Single	3400	2	4	-
1054056	1055655	90	Single	3400	2	-	2
1054120	1055654	90	Slug (B)	3130	3	-	-
1054121	1055654	90	Slug (B)	3130	1 & 1X	1	1
1054122	1055658	90	Single	3600	1	1	-

RELAYS AND MOUNTING BRACKETS - FIGURE 3

Electrical Parts

Relay Part No.	Coil Part No.	Volts	Type Coil	Resistance	No. of Contacts & Class A	B	C
1054123	1055656	90	Single	2000	-	-	4
1054124	1055656	90	Single	2000	4	-	4
1054125	1055656	90	Single	2000	3	2	3
1054126	1055655	90	Single	3400	1	3	-
1054127	1055653	90	Double	2000/3000	1	-	2
1054128	1055653	90	Double	2000/3000	4	1	2
1054129	1055653	90	Double	2000/3000	3	-	3
1054130	1055655	90	Single	3400	1	-	2
1055841	1055657	48-90	Single	500	2	5	-
1055861	1057517	48	Single	2400	2	1	-
1055862	1057516	48	Single	1600	-	-	8
1055955	1057517	48	Single	2400	8	-	-
1055956	1057515	48	Single	250	-	-	1
1055957	1057514	48	Double	1200/1000	-	2	2
1056299	1057518	48	Single	1600	-	-	3
1057343	1055653	90	Double	2000/3000	10	-	-
1057344	1040687	90	Double	2000/2000	-	-	6
1057476	1055654	90	Slug (B)	3130	5	-	2
1057519	1055656	90	Single	2000	7 & 1X	-	1
1057538	1055658	90	Single	3600	1 & 1X	1	1
1057717	1040687	90	Double	2000/2000	-	-	4
1057718	1055653	90	Double	2000/3000	2	-	2

Friden, Inc.

CONTACT LOCATION - FIGURE 4

Electrical Parts

CONTACT LOCATION - FIGURE 4

Electrical Parts

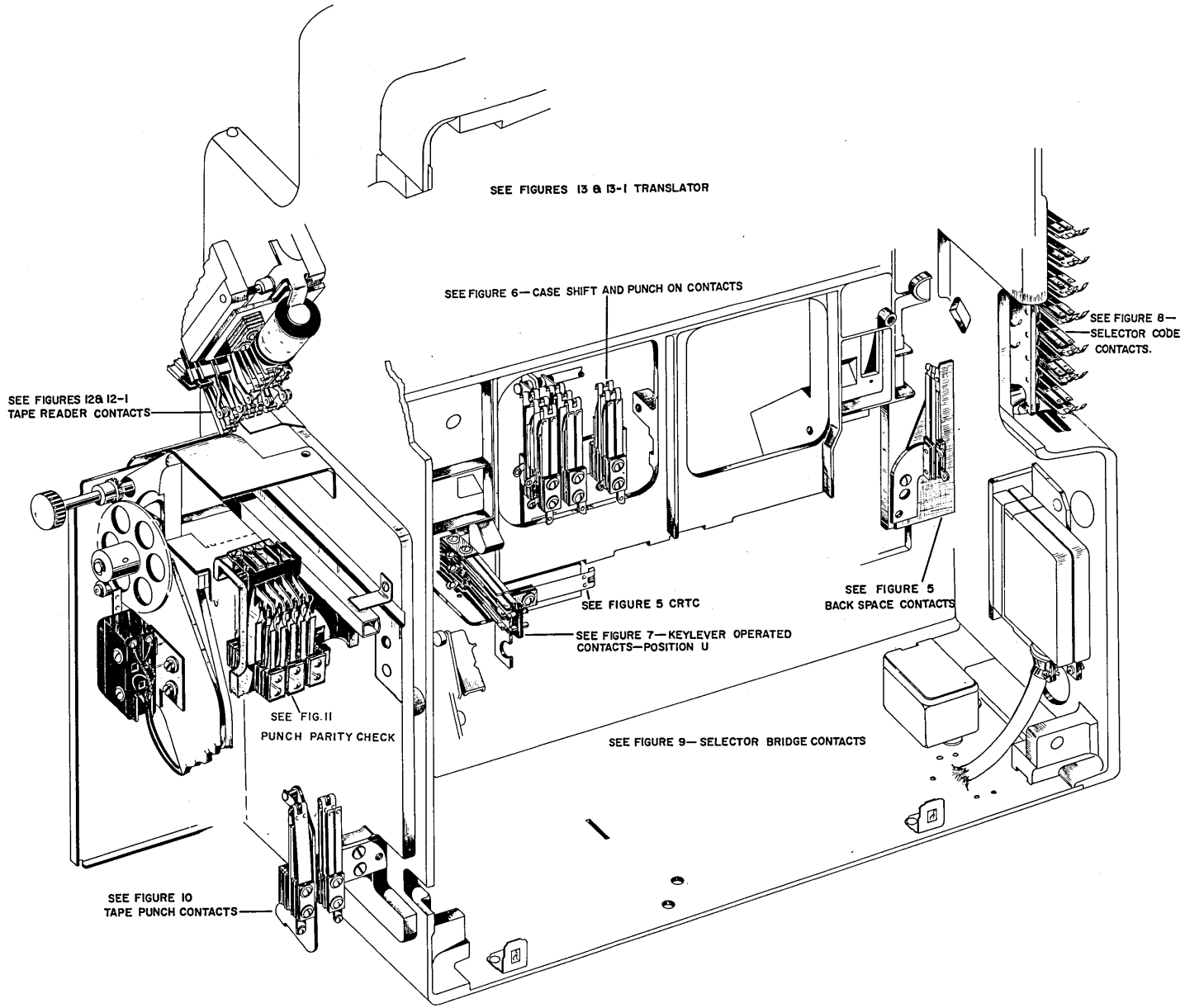

Friden, Inc.

CRTC AND BACK SPACE CONTACTS
FIGURE 5

Electrical Parts

CRTC AND BACK SPACE CONTACTS - FIGURE 5

Electrical Parts

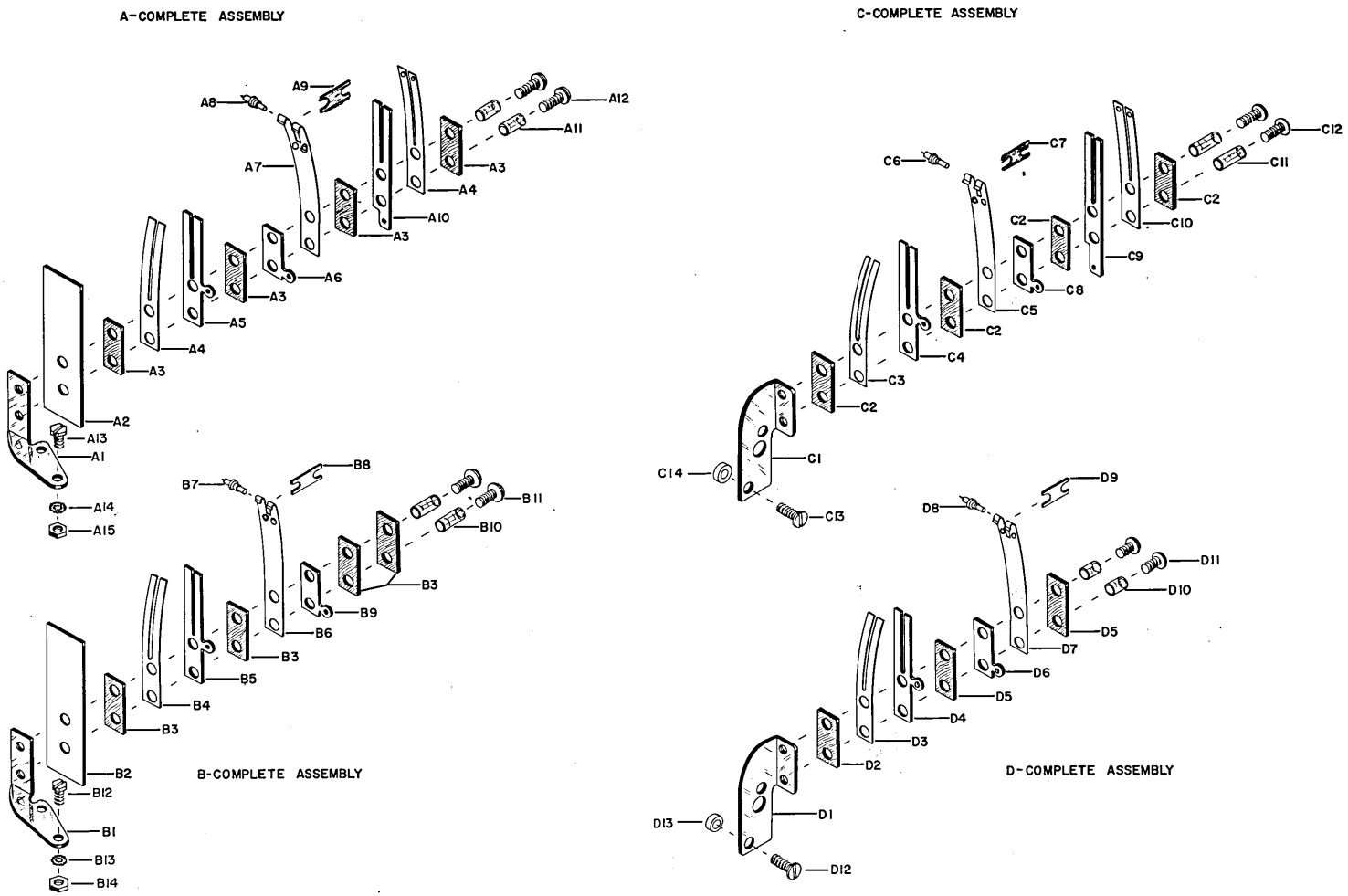

CRTC AND BACK SPACE CONTACTS - FIGURE 5

Electrical Parts

Ref. No.	Part No.	Part Name
A	1043525	CRTC and Bracket Assembly - Justowriter
A1	1054787	Contact Mounting Bracket
A2	1055869	Contact Cover
A3	302948	Insulator
A4	1053055	Contact Spring Assembly
A5	1057473	Contact Stiffener - With Terminal
A6	1053220	Terminal
A7	1053109	Contact Spring Assembly
A8	1053057	Shaft - Contact Operator
A9	1053110	Contact Operator
A10	1054431	Stiffener Terminal
A11	100359	Screw Insulator
A12	173203	Screw
A13	1040271	Screw for mounting A
A14	7341	Star Washer for A13
A15	56722	Nut for A
B	1054788	CRTC and Bracket Assembly - Flexowriter
B1	1054787	Contact Mounting Bracket
B2	1055869	Contact Cover
B3	302948	Insulator
B4	1053055	Contact Spring Assembly
B5	1057473	Contact Stiffener with Terminal
B6	1053053	Contact Spring Assembly
B7	1053057	Shaft - Contact Operator
B8	1053110	Contact Operator
B9	1053220	Terminal
B10	114045	Screw Insulator
B11	173202	Screw
B12	1040271	Screw for mounting B
B13	7341	Star Washer for B12
B14	56722	Nut for B12
C	1042966	Back Space Contact & Assembly - Flexowriter
C1	1043182	Contact Mounting Bracket
C2	100354	Insulator
C3	1053055	Contact Spring Assembly
C4	1057473	Contact Stiffener with Terminals
C5	1053109	Contact Spring Assembly
C6	1053057	Shaft - Contact Operator
C7	1053110	Contact Operator
C8	1053220	Terminal
C9	1053219	Stiffener Terminal
C10	1053055	Contact Spring Assembly
C11	100354	Screw Insulator
C12	1057219	Screw

CRTC AND BACK SPACE CONTACTS - FIGURE 5

Electrical Parts

Ref. No.	Part No.	Part Name
C13	120044	Screw for mounting new C1
C13	109315	Screw for mounting old C1
C14	1091007	Spacer, used with 109315 only
D	1053733	Back Space Contact and Bracket Assembly - Justowriter and Flexowriter
D1	1043182	Contact Mounting Bracket
D2	302949	Insulator
D3	1053055	Contact Spring Assembly
D4	1057473	Contact Stiffener with Terminal
D5	302948	Insulator
D6	1053220	Terminal
D7	1053053	Contact Spring Assembly
D8	1053057	Shaft Contact Operator
D9	1053110	Contact Operator
D10	167187	Screw Insulator
D11	1091745	Screw
D12	120044	Screw for mounting new D1
D12	109315	Screw for mounting old D1
D13	1091007	Spacer, used with 109315 only

Friden, Inc.

CASE SHIFT AND PUNCH OFF - POS. 5 - FIGURE 6

Electrical Parts

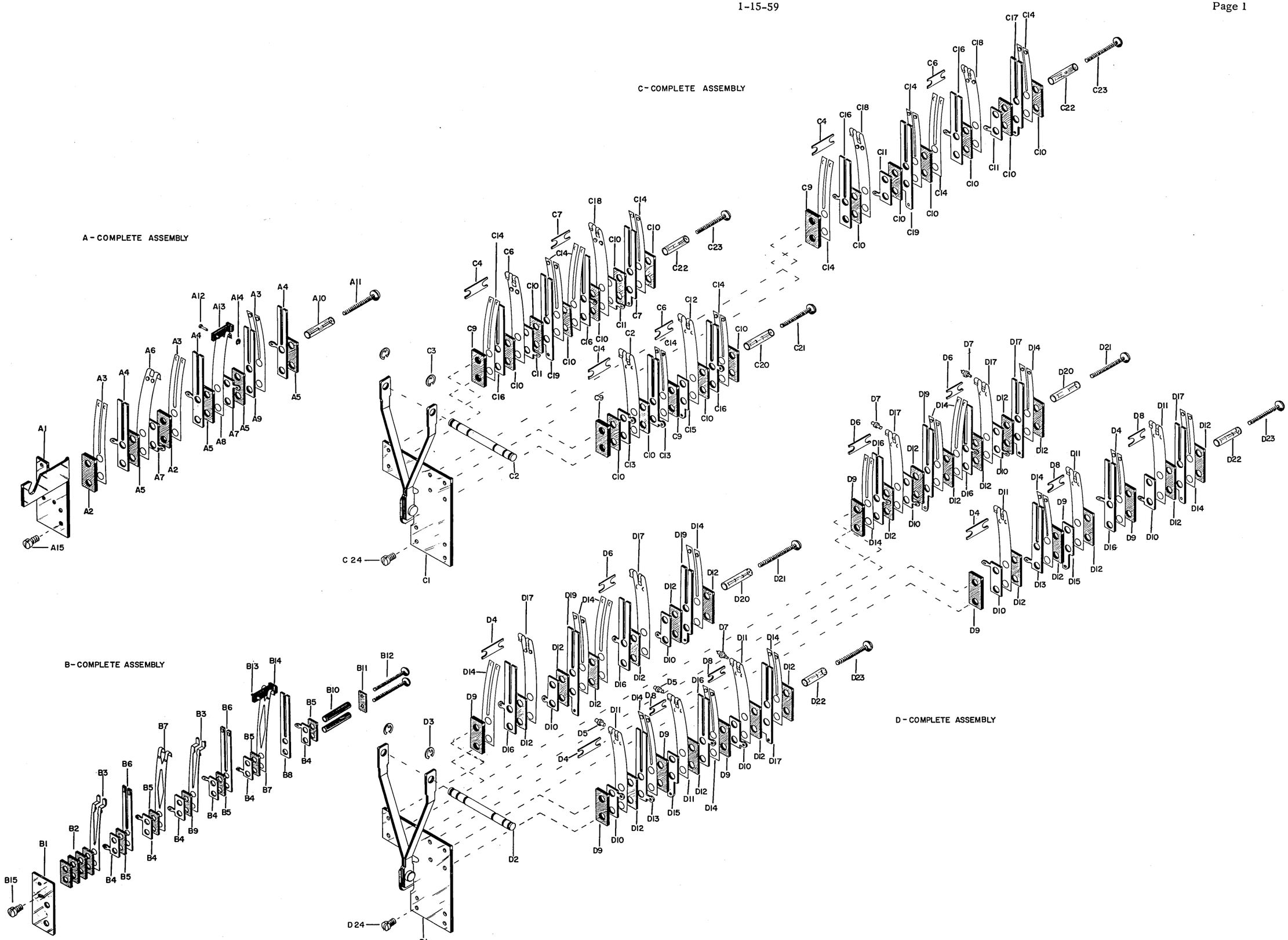
A - COMPLETE ASSEMBLY
B - COMPLETE ASSEMBLY
C - COMPLETE ASSEMBLY
D - COMPLETE ASSEMBLY

CASE SHIFT AND PUNCH OFF - POS. 5 - FIGURE 6

Electrical Parts

Ref. No.	Part No.	Part Name
A	1057411	Contact and Mounting Bracket Assembly
A1	1042800	Mounting Bracket
A2	302949	Insulator - Thick
A3	1053055	Contact Spring Assembly
A4	1057473	Stiffener - Short with Terminal
A5	302948	Insulator - Thin
A6	1053108	Contact Spring Assembly
A7	1053220	Terminal
A8	1053109	Contact Spring Assembly
A9	1053059	Stiffener - Short
A10	100231	Screw Insulator
A11	173219	Screw
A12	1054572	Contact Operator Shaft
A13	1057414	Contact Operator
A14	1054571	Retaining Clip for A12
A15	1091369	Screw for mounting A1
B	1044535	Contact Assembly
B1	1043491	Contact Mounting Plate
B2	1043483	Insulator
B3	1044529	Contact Spring Assembly
B4	1043487	Terminal
B5	1043488	Insulator
B6	1044533	Contact Spring Assembly
B7	1044530	Contact Spring Assembly
B8	1044531	Stiffener
B9	1043471	Insulator
B10	1044534	Screw Insulator
B11	1043473	Clamping Plate
B12	1045602	Screw
B13	1043498	Contact Operator Shaft
B14	1057414	Contact Operator
B15	1091369	Screw for mounting B1
C	1040576	Case Shift Contact Assembly
C1	1040650	Bracket and Arm Assembly
C2	1040653	Shaft
C3	1092125	Retaining Ring for C2
C4	1054149	Contact Operator
C5	1053112	Contact Operating Shaft - Double
C6	1053110	Contact Operator
C7	1053058	Contact Operator
C8	1053057	Contact Operating Shaft - Single
C9	302949	Insulator - Thick
C10	302948	Insulator - Thin
C11	1053220	Terminal

CASE SHIFT AND PUNCH OFF - POS. 5 - FIGURE 6

Electrical Parts

Ref. No.	Part No.	Part Name
C12	1053108	Contact Spring Assembly
C13	1057474	Stiffener Terminal
C14	1053055	Contact Spring Assembly
C15	1053221	Terminal
C16	1057473	Stiffener Terminal
C17	1054431	Stiffener Terminal
C18	1053109	Contact Spring Assembly
C19	1053219	Stiffener Terminal
C20	100759	Screw Insulator
C21	173207	Screw
C22	100212	Screw Insulator
C23	173209	Screw
C24	1091369	Screw for mounting C1
D	1043349	Case Shift Contact Assembly
D1	1040650	Bracket and Arm Assembly
D2	1040653	Shaft
D3	1092125	Retaining Ring for D2
D4	1054149	Contact Operator
D5	1053112	Contact Operating Shaft - Double
D6	1053110	Contact Operator
D7	1053057	Contact Operating Shaft - Single
D8	1053058	Contact Operator
D9	302949	Insulator - Thick
D10	1053220	Terminal
D11	1053108	Contact Spring Assembly
D12	302948	Insulator - Thin
D13	1057474	Stiffener Terminal
D14	1053055	Contact Spring Assembly
D15	1054398	Terminal
D16	1057473	Stiffener Terminal
D17	1053431	Stiffener Terminal
D18	1053109	Contact Spring Assembly
D19	1053219	Stiffener Terminal
D20	100349	Screw Insulator
D21	173210	Screw
D22	100212	Screw Insulator
D23	173209	Screw
D24	1091369	Screw for mounting D1

Friden, Inc.

KEYLEVER OPERATED CONTACTS
POS. 3 - FIGURE 7

Electrical Parts

KEYLEVER OPERATED CONTACTS - POS. 3 - FIGURE 7

Electrical Parts

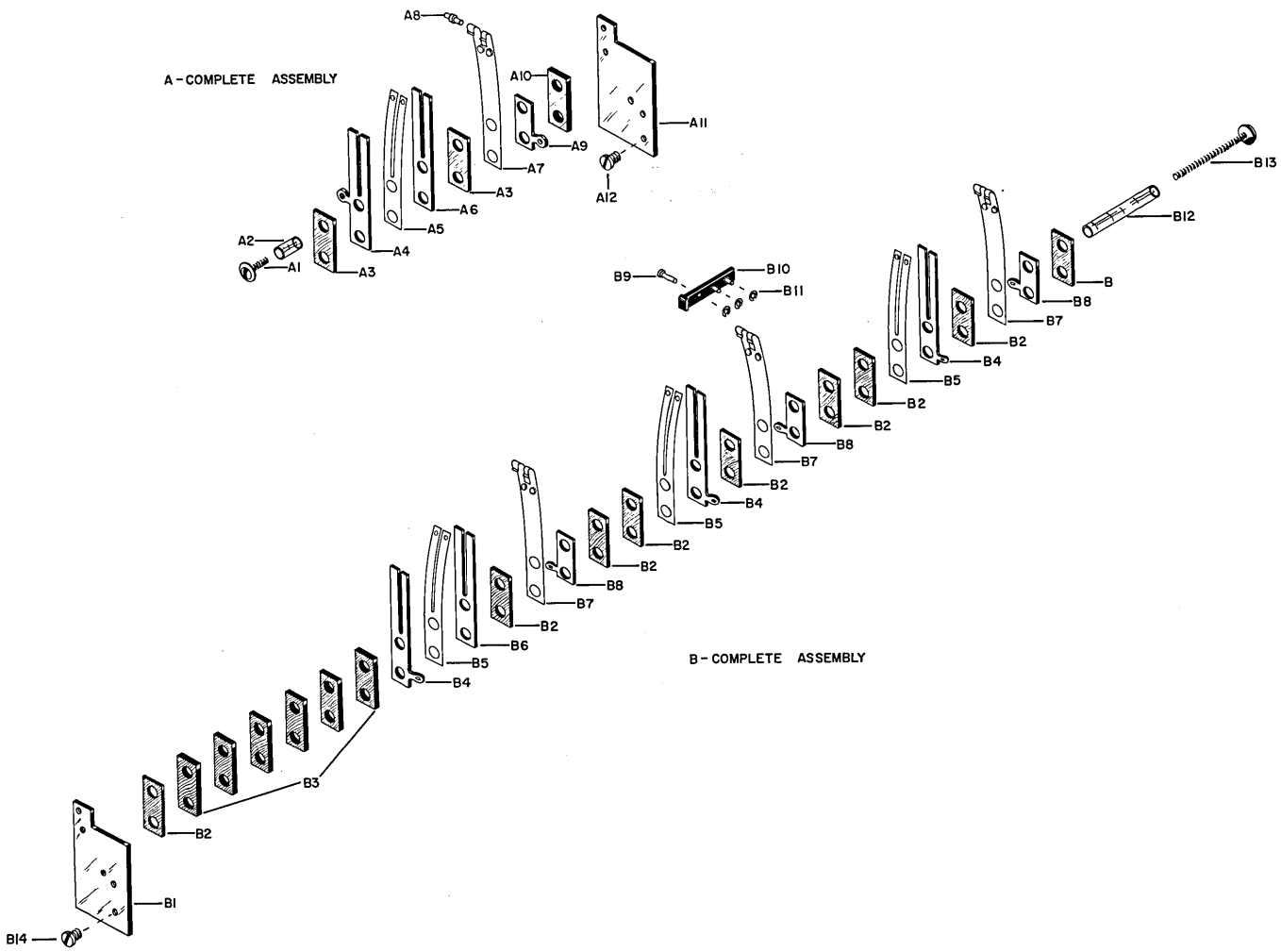

KEYLEVER OPERATED CONTACTS - POS. 3 - FIGURE 7

Electrical Parts

Ref. No.	Part No.	Part Name
A	1044737	Contact and Bracket Assembly
A1	173202	Screw
A2	100464	Screw Insulator
A3	302948	Insulator - Thin
A4	1057473	Stiffener Terminal
A5	1053055	Contact Spring Assembly
A6	1053091	Stiffener
A7	1053053	Contact Spring Assembly
A8	1053112	Contact Operator Shaft
A9	1053220	Terminal
A10	309949	Insulator - Thick
A11	1044735	Contact Mounting Bracket
A12	1091229	Screw for mounting A11
B	1044736	Contact and Bracket Assembly
B1	1044735	Contact Mounting Bracket
B2	302948	Insulator - Thin
B3	302949	Insulator - Thick
B4	1057474	Stiffener Terminal
B5	1053055	Contact Spring Assembly
B6	1053059	Stiffener
B7	1053053	Contact Spring Assembly
B8	1053220	Terminal
B9	1054572	Contact Operating Shaft
B10	1054063	Contact Operator
B11	1054571	Retaining Ring for B10
B12	185996	Screw Insulator
B13	180529	Screw
B14	1091229	Screw for mounting B1

SELECTOR CODE CONTACTS - FIGURE 8

Electrical Parts

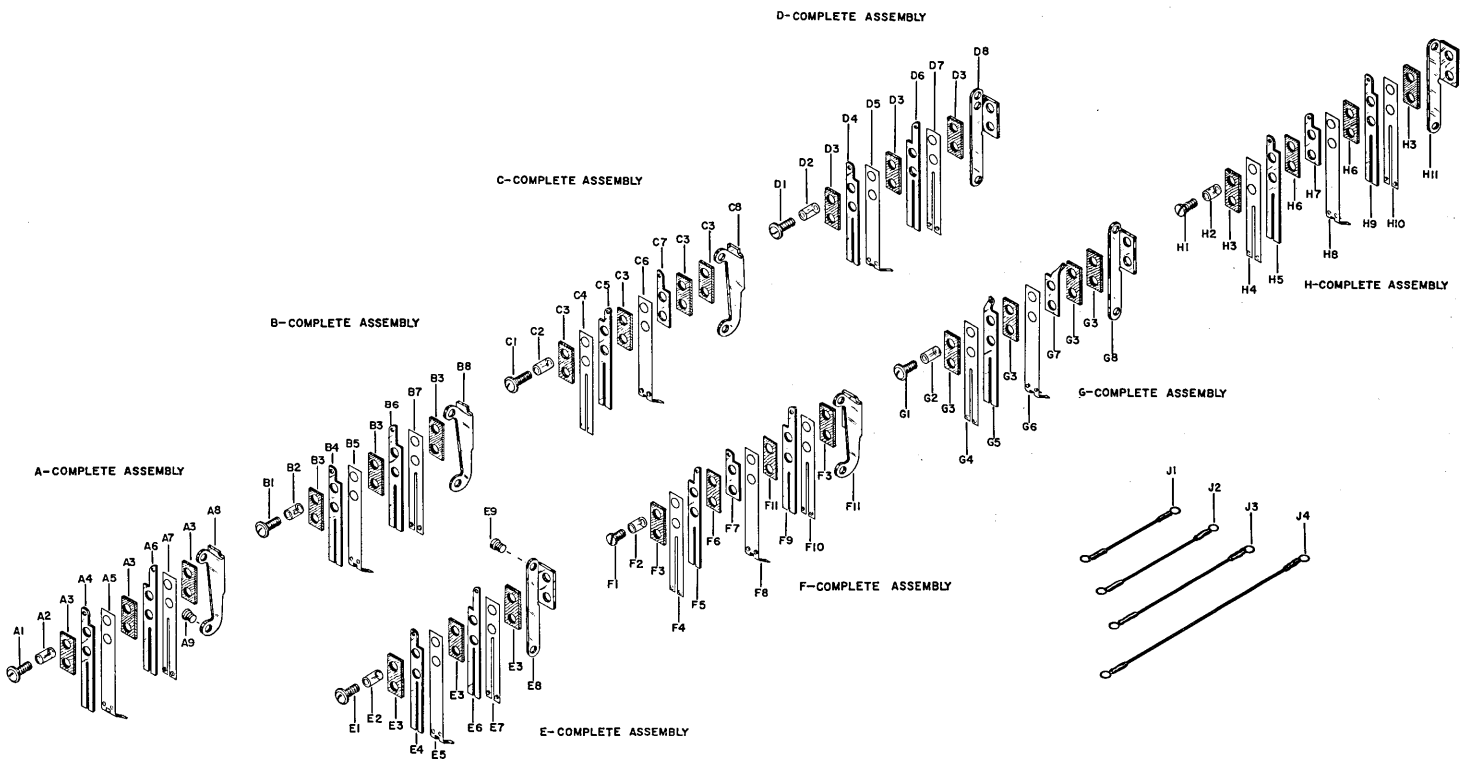

SELECTOR CODE CONTACTS - FIGURE 8

Electrical Parts

Ref. No.	Part No.	Part Name
A	1053739	Contact Assembly - Outside (Common)
A1	1091745	Screw
A2	167187	Screw Insulator
A3	302948	Insulator
A4	1054314	Stiffener Terminal
A5	1053740	Contact Spring Assembly
A6	1053219	Stiffener Terminal
A7	1053147	Contact Spring Assembly
A8	1060451	Bracket - Contact Mounting
A9	1091817	Screw for mounting A8
B	1053742	Contact Assembly - Outside
B1	1091745	Screw
B2	167187	Screw Insulator
B3	302948	Insulator
B4	1054431	Stiffener Terminal
B5	1053743	Contact Spring Assembly
B6	1053219	Stiffener Terminal
B7	1053055	Contact Spring Assembly
B8	1060451	Bracket - Contact Mounting
B9	1091817	Screw for mounting B8 (see A9)
C	1053984	Contact Assembly - Outside
C1	1091570	Screw
C2	100464	Screw Insulator
C3	302948	Insulator
C4	1057299	Contact Spring Assembly
C5	1057302	Stiffener Terminal
C6	1057019	Contact Spring Assembly
C7	1054398	Terminal
C8	1060451	Bracket - Contact Mounting
C9	1091817	Screw for mounting C8 (see A9)
D	1054024	Contact Assembly - Inside
D1	1091745	Screw
D2	167187	Screw Insulator
D3	302948	Insulator
D4	1054431	Stiffener Terminal
D5	1053743	Contact Spring Assembly
D6	1053219	Stiffener Terminal
D7	1053055	Contact Spring Assembly
D8	1060448	Bracket - Contact Mounting - Inside
D9	1091817	Screw for mounting D8 (see A9)
E	1056739	Contact Assembly - Inside
E1	1091745	Screw
E2	167187	Screw Insulator
E3	302948	Insulator
E4	1054431	Stiffener Terminal

SELECTOR CODE CONTACTS - FIGURE 8

Electrical Parts

Ref. No.	Part No.	Part Name
E5	1053740	Contact Spring Assembly
E6	1053219	Stiffener Terminal
E7	1053147	Contact Spring Assembly
E8	1060448	Bracket - Contact Mounting - Inside
E9	1091817	Screw for mounting E8
F	1057298	Contact Assembly - Outside
F1	196398	Screw
F2	100133	Screw Insulator
F3	302948	Insulator
F4	1053055	Contact Spring Assembly
F5	1057302	Stiffener Terminal
F6	1055568	Insulator
F7	1053221	Terminal
F8	1057301	Contact Spring Assembly
F9	1053219	Stiffener Terminal
F10	1057299	Contact Spring Assembly
F11	1060451	Bracket - Contact Mounting
F12	1091817	Screw for mounting F11 (see E9)
G	1057374	Contact Assembly - Inside
G1	1091570	Screw
G2	100464	Screw Insulator
G3	302948	Insulator
G4	1057299	Contact Spring Assembly
G5	1057302	Stiffener Terminal
G6	1057019	Contact Spring Assembly
G7	1054398	Terminal
G8	1060448	Bracket - Contact Mounting - Inside
G9	1091817	Screw for mounting G8 (see E9)
H	1057505	Contact Assembly - Inside
H1	196396	Screw
H2	100133	Screw Insulator
H3	302948	Insulator
H4	1057299	Contact Spring Assembly
H5	1057303	Stiffener Terminal
H6	1055568	Insulator
H7	1054398	Terminal
H8	1057301	Contact Spring Assembly
H9	1053219	Stiffener Terminal
H10	1053055	Contact Spring
H11	1060448	Bracket - Contact Mounting - Inside
H12	1091817	Screw for mounting H11 (see E9)
J1	1055981	Jumper Assembly - 2-3/16 Long
J2	1055990	Jumper Assembly - 2-11/16 Long
J3	1055034	Jumper Assembly - 3-1/8 Long
J4	1056547	Jumper Assembly - 4-7/17 Long

Friden, Inc.

SELECTOR BRIDGE CONTACTS - FIGURE 9

Electrical Parts

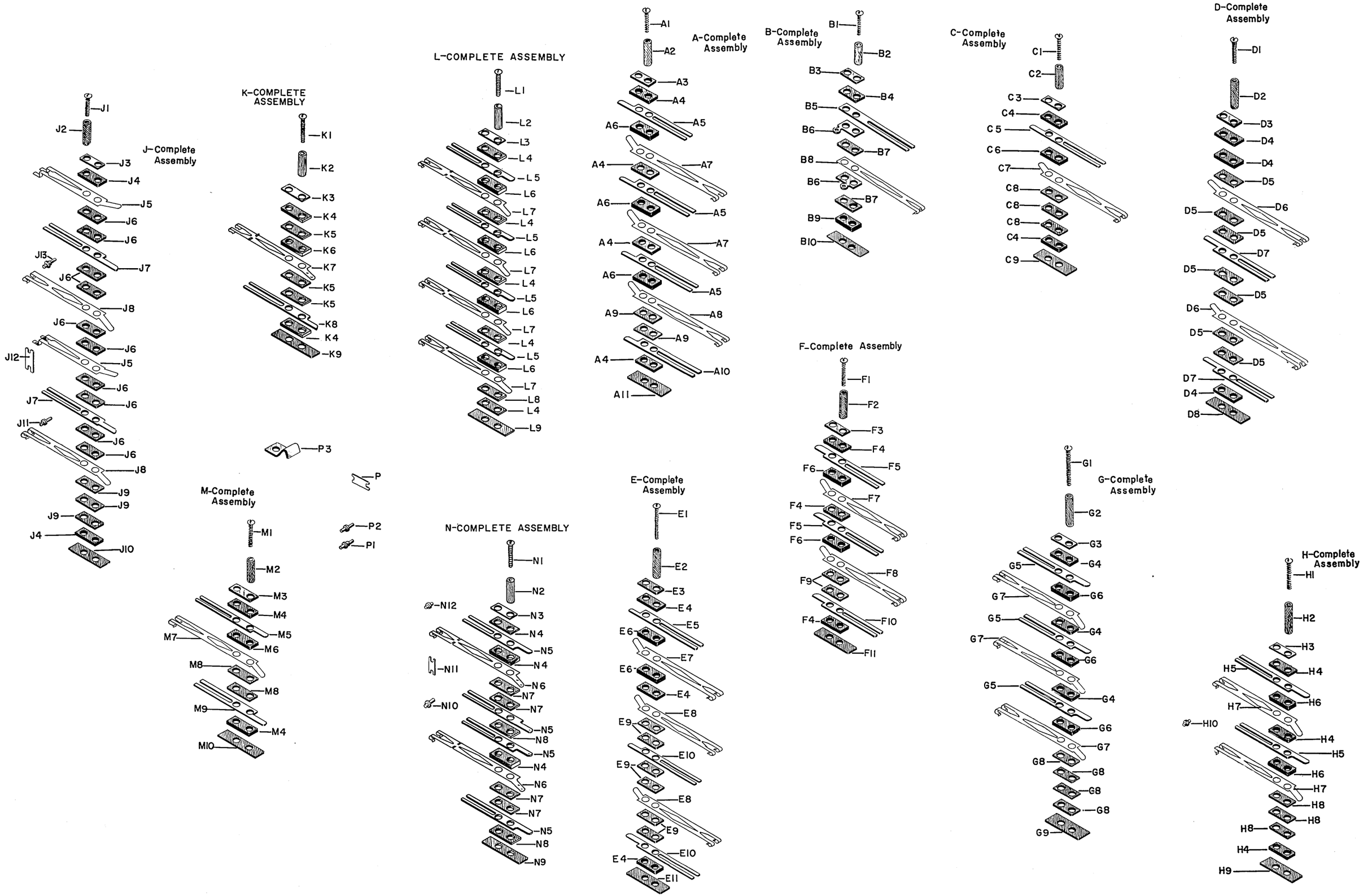
J-Complete Assembly
J1
J2
J3
J4
J5
J6
J6
J7
J13
J6
J8
J6
J6
J12
J5
J6
J7
J6
J11
J6
J6
J8
J9
J9
J9
J4
J10
K-COMPLETE ASSEMBLY
K1
K2
K3
K4
K5
K6
K7
K5
K5
K8
K4
K9
P3
P
P2
P1
M-Complete Assembly
M1
M2
M3
M4
M5
M7
M6
M8
M8
M9
M4
M10
L-COMPLETE ASSEMBLY
L1
L2
L3
L4
L5
L6
L7
L4
L5
L6
L7
L4
L5
L6
L7
L4
L5
L6
L7
L8
L4
L9
N-COMPLETE ASSEMBLY
N1
N2
N12
N3
N4
N5
N4
N11
N6
N7
N10
N7
N5
N8
N5
N4
N6
N7
N7
N5
N8
N9
A-Complete Assembly
A1
A2
A3
A4
A5
A6
A4
A7
A6
A5
A4
A7
A6
A5
A9
A8
A9
A4
A10
A11
E-Complete Assembly
E1
E2
E3
E4
E5
E6
E7
E6
E4
E8
E9
E10
E9
E8
E9
E10
E4
E11
B-Complete Assembly
B1
B2
B3
B4
B5
B6
B7
B8
B6
B7
B9
B10
F-Complete Assembly
F1
F2
F3
F4
F5
F6
F7
F4
F5
F6
F8
F9
F10
F4
F11
C-Complete Assembly
C1
C2
C3
C4
C5
C6
C7
C8
C8
C8
C4
C9
G-Complete Assembly
G1
G2
G3
G4
G5
G6
G7
G5
G4
G7
G6
G5
G4
G6
G7
G8
G8
G8
G8
G9
D-Complete Assembly
D1
D2
D3
D4
D4
D5
D5
D6
D5
D7
D5
D5
D6
D5
D5
D7
D4
D8
H-Complete Assembly
H1
H2
H3
H5
H4
H7
H6
H10
H4
H5
H6
H7
H8
H8
H8
H4
H9

SELECTOR BRIDGE CONTACTS - FIGURE 9

Electrical Parts

Ref. No.	Part No.	Part Name
A	1043482	Contact Assembly - 1 Class C and 2 Class A
A1	1040305	Screw
A2	1043479	Screw Insulator
A3	1043473	Clamping Plate
A4	1043471	Insulator
A5	1043353	Contact Spring Assembly
A6	1043483	Insulator
A7	1043354	Contact Spring Assembly
A8	1043355	Contact Spring Assembly
A9	1043470	Insulator
A10	1044789	Contact Spring Assembly
A11	1043472	Insulator
B	1044536	Contact Assembly - 1 Class A
B1	1043474	Screw
B2	1040297	Screw Insulator
B3	1043473	Clamping Plate
B4	1043471	Insulator
B5	1043486	Contact Spring Assembly
B6	1043487	Terminal
B7	1043470	Insulator
B8	1044537	Contact Spring Assembly
B9	1043483	Insulator
B10	1043472	Insulator
C	1043476	Contact Assembly - 1 Class A
C1	1043474	Screw
C2	1040297	Screw Insulator
C3	1043473	Clamping Plate
C4	1043471	Insulator
C5	1043353	Contact Spring Assembly
C6	1043483	Insulator
C7	1043354	Contact Spring Assembly
C8	1043470	Insulator
C9	1043472	Insulator
D	1044721	Contact Assembly - 2 Class B
D1	1040298	Screw
D2	1043484	Screw Insulator
D3	1043473	Clamping Plate
D4	1043471	Insulator
D5	1043470	Insulator
D6	1043355	Contact Spring Assembly
D7	1043353	Contact Spring Assembly
D8	1043472	Insulator

SELECTOR BRIDGE CONTACTS - FIGURE 9

Electrical Parts

Ref. No.	Part No.	Part Name
E	1044632	Contact Assembly - 1 Class A and 2 Class B
E1	1040305	Screw
E2	1043479	Screw Insulator
E3	1043473	Clamping Plate
E4	1043471	Insulator
E5	1043353	Contact Spring Assembly
E6	1043483	Insulator
E7	1043354	Contact Spring Assembly
E8	1044788	Contact Spring Assembly
E9	1043470	Insulator
E10	1044789	Contact Spring Assembly
E11	1043472	Insulator
F	1043481	Contact Assembly - 1 Class A and 1 Class C
F1	1040298	Screw
F2	1043484	Screw Insulator
F3	1043473	Clamping Plate
F4	1043471	Insulator
F5	1043353	Contact Spring Assembly
F6	1043483	Insulator
F7	1043354	Contact Spring Assembly
F8	1043355	Contact Spring Assembly
F9	1043470	Insulator
F10	1044789	Contact Spring Assembly
F11	1043472	Insulator
G	1043480	Contact Assembly - 3 Class A
G1	1040305	Screw
G2	1043479	Screw Insulator
G3	1043473	Clamping Plate
G4	1043471	Insulator
G5	1043353	Contact Spring Assembly
G6	1043483	Insulator
G7	1043354	Contact Spring Assembly
G8	1043470	Insulator
G9	1043472	Insulator
H	1043478	Contact Assembly - 2 Class A
H1	1040298	Screw
H2	1043484	Screw Insulator
H3	1043473	Clamping Plate
H4	1043471	Insulator
H5	1043353	Contact Spring Assembly
H6	1043484	Insulator
H7	1043354	Contact Spring Assembly
H8	1043470	Insulator
H9	1043472	Insulator
H10	1044118	Contact Operator Shaft

SELECTOR BRIDGE CONTACTS - FIGURE 9

Electrical Parts

Ref. No.	Part No.	Part Name
J	1044542	Contact Assembly - 2 Class C (M-B)
J1	1040305	Screw
J2	1044573	Screw Insulator
J3	1043473	Clamping Plate
J4	1043471	Insulator
J5	1044527	Contact Spring Assembly
J6	1043488	Insulator
J7	1044532	Contact Spring Assembly
J8	1044528	Contact Spring Assembly
J9	1043470	Insulator
J10	1043472	Insulator
J11	1053112	Contact Operator Shaft
J12	1056984	Contact Operator
J13	1053057	Contact Operator Shaft
K	1044376	Contact Assembly - 1 Class B
K1	1043474	Screw
K2	1040297	Screw Insulator
K3	1043473	Clamping Plate
K4	1043471	Insulator
K5	1043470	Insulator
K6	1043483	Insulator
K7	1044788	Contact Spring Assembly
K8	1044789	Contact Spring Assembly
K9	1043472	Insulator
L	1045003	Contact Assembly - 4 Class A
L1	1040305	Screw
L2	1046332	Screw Insulator
L3	1043473	Clamping Plate
L4	1043471	Insulator
L5	1043353	Contact Spring Assembly
L6	1043483	Insulator
L7	1043354	Contact Spring Assembly
L8	1043470	Insulator
L9	1043472	Insulator
M	1043475	Contact Assembly - 1 Class C
M1	1043474	Screw
M2	1040297	Screw Insulator
M3	1043473	Clamping Plate
M4	1043471	Insulator

SELECTOR BRIDGE CONTACTS - FIGURE 9

Electrical Parts

Ref. No.	Part No.	Part Name
M5	1043353	Contact Spring Assembly
M6	1043483	Insulator
M7	1043355	Contact Spring Assembly
M8	1043470	Insulator
M9	1044789	Contact Spring Assembly
M10	1043472	Insulator
N	1045257	Contact Assembly - 2 Class C
N1	1040305	Screw
N2	1045258	Screw Insulator
N3	1043473	Clamping Plate
N4	1043483	Insulator
N5	1043353	Contact Spring Assembly
N6	1043355	Contact Spring Assembly
N7	1043470	Insulator
N8	1043471	Insulator
N9	1043472	Insulator
N10	1053112	Contact Operator Shaft
N11	1056984	Contact Operator
N12	1044116	Contact Operator Shaft
P	1043477	Contact Operator - Used on all Assemblies from Slide to First Operate Strap.
P1	1043497	Contact Operator Shaft - Used on all Assemblies with P except J and N.
P2	1044118	Contact Operator Shaft Bumper used with assemblies, A, D, E, F and G for operate strap not operating directly on Slide.
P3	1044643	Cable Clamp

Friden, Inc.

SELECTOR BRIDGE - FIGURE 9-1

Electrical Parts

SELECTOR BRIDGE - FIGURE 9-1

Electrical Parts

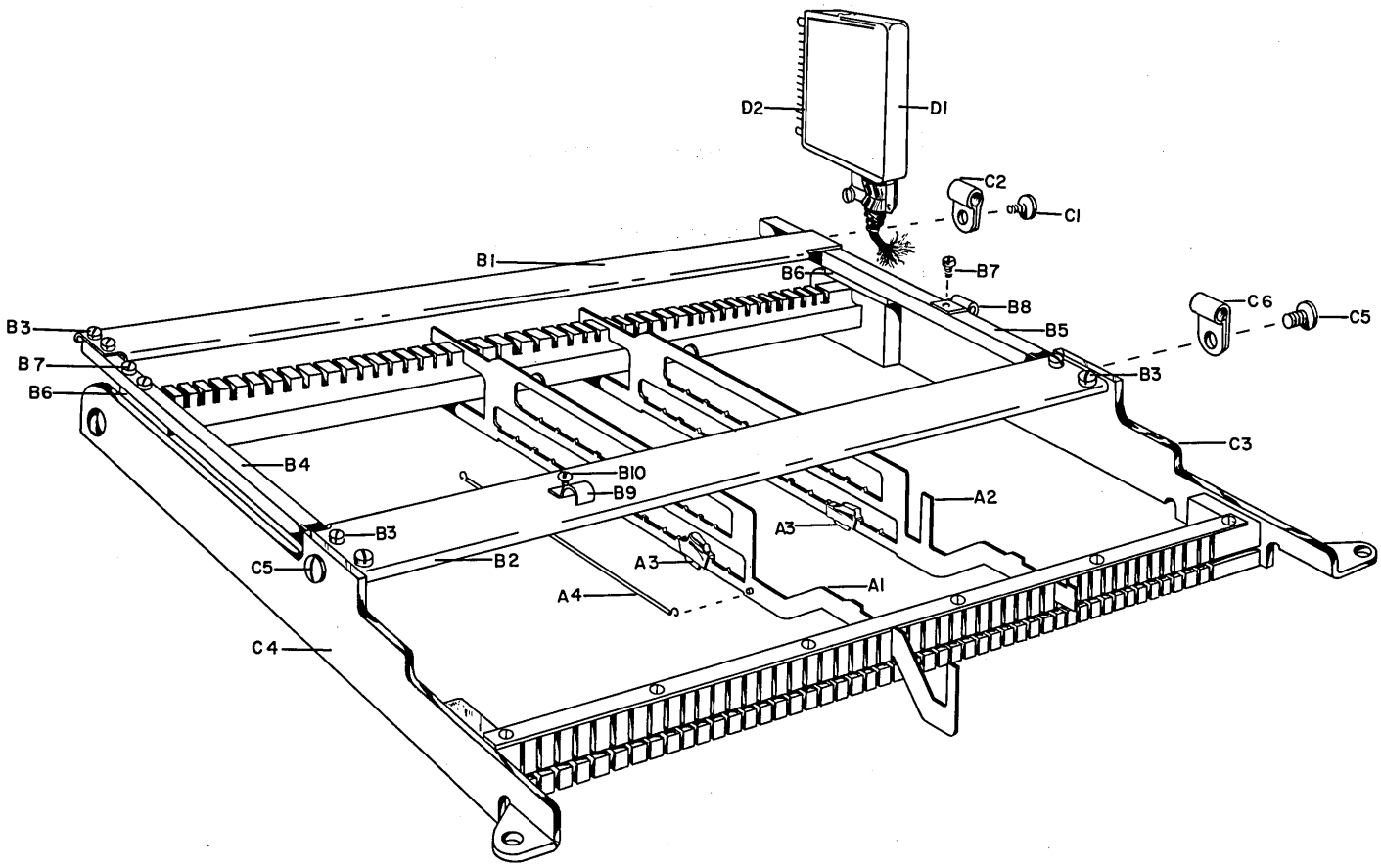

SELECTOR BRIDGE - FIGURE 9-1

Electrical Parts

Ref. No.	Part No.	Part Name
A1	1045229	Front Bridge Selector Slide
A2	1045230	Rear Bridge Selector Slide
A3	1043255	Selector Bail Operator
A4	1044183	Selector Slide Spring
B1	1043460	Rear Selector Bridge
B2	1043500	Front Selector Bridge
B3	4236	Screw to mount B1 & B2 to B4 & B5
B4	1043461	Contact Channel Support
B5	1044538	Contact Channel Support
B6	1043462	Spacer
B7	1500	Screw to mount B8 to B5
B8	1044539	Cable Clamp
B9	1044643	Cable Clamp
B10	38794	Screw to mount B9 to B2
C1	120044	Screw
C2	1054402	Cable Clamp
C3	1043465	Right Hand End Plate
C4	1043503	Left Hand End Plate
C5	34512	Screw to mount B4 to C4 & B5 to C3
C6	6222164	Cable Clamp
D1	1058146	Winchester Plug Hood
D2	1058145	Winchester Plug - 21 point

TAPE PUNCH CONTACTS - FIGURE 10

Electrical Parts

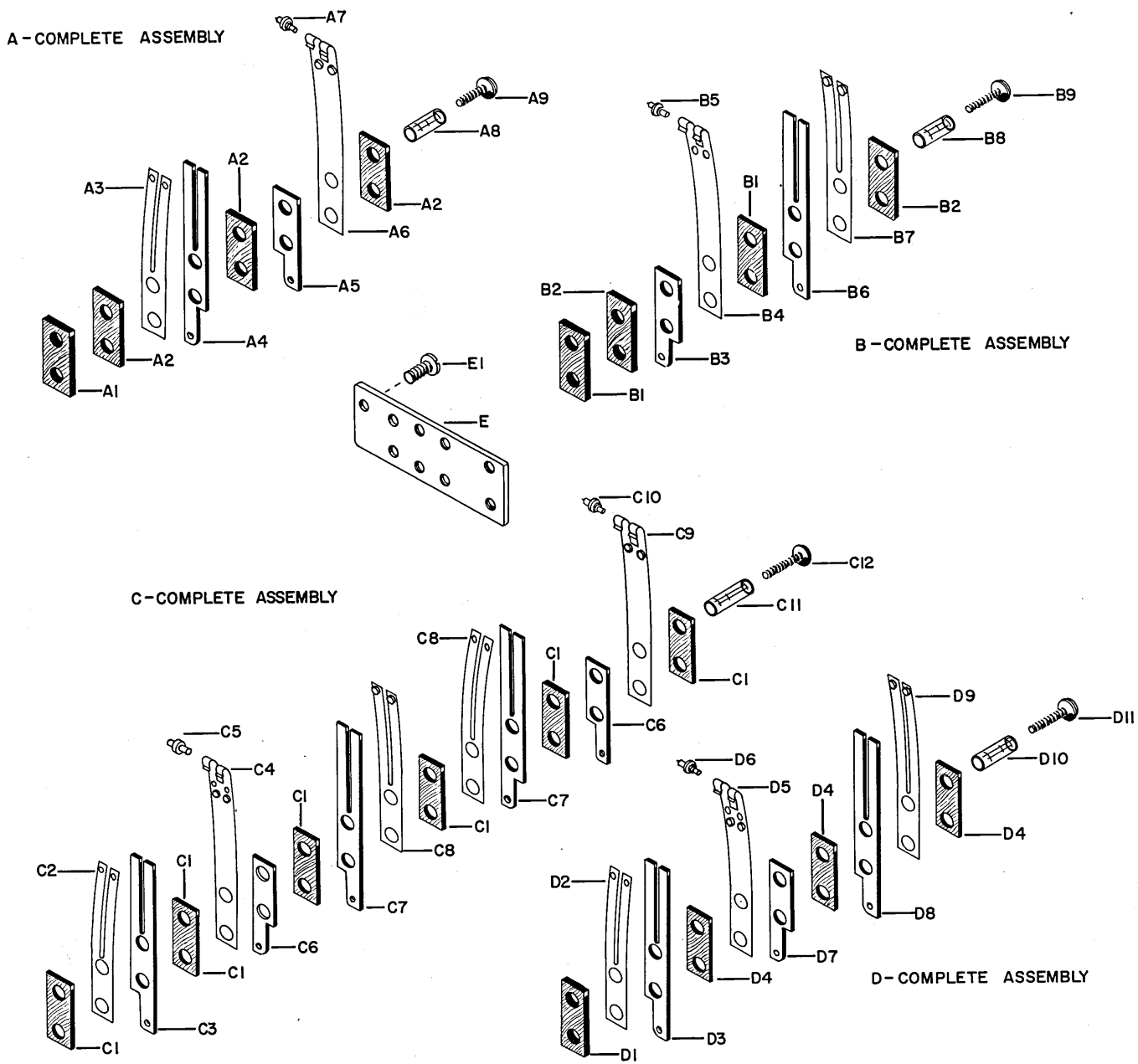

TAPE PUNCH CONTACTS - FIGURE 10

Electrical Parts

Ref. No.	Part No.	Part Name
A	1042145	Contact Assembly - P.T.C. and P.L.C.
A1	302949	Insulator - Thick
A2	302948	Insulator - Thin
A3	1053055	Contact Spring Assembly
A4	1053219	Stiffener Terminal
A5	1054398	Terminal
A6	1053053	Contact Spring Assembly
A7	1053057	Contact Operator Shaft
A8	114045	Screw Insulator
A9	173202	Screw
B	1042148	Contact Assembly - P.T.C. and P.C.C.
B1	302949	Insulator - Thick
B2	302948	Insulator - Thin
B3	1054398	Terminal
B4	1053108	Contact Spring Assembly
B5	1053057	Contact Operator Shaft
B6	1053219	Stiffener Terminal
B7	1053055	Contact Spring Assembly
B8	114045	Screw Insulator
B9	173202	Screw
C	1042149	Contact Assembly - P.L.C.
C1	302948	Insulator - Thin
C2	1053217	Contact Spring Assembly
C3	1054399	Stiffener Terminal
C4	1053218	Contact Spring Assembly
C5	1053112	Contact Operator Shaft
C6	1054398	Terminal
C7	1053219	Stiffener Terminal
C8	1053055	Contact Spring Assembly
C9	1053053	Contact Spring Assembly
C10	1053057	Contact Operator Shaft
C11	100759	Screw Insulator
C12	173206	Screw
D	1042147	Contact Assembly - P.L.C.
D1	302949	Insulator - Thick
D2	1053217	Contact Spring Assembly
D3	1054399	Stiffener Terminal
D4	302948	Insulator - Thin

TAPE PUNCH CONTACTS - FIGURE 10

Electrical Parts

Ref. No.	Part No.	Part Name
D5	1053218	Contact Spring Assembly
D6	1053057	Contact Operator Shaft
D7	1054398	Terminal
D8	1053219	Stiffener Terminal
D9	1053055	Contact Spring Assembly
D10	100277	Screw Insulator
D11	173203	Screw
E	1053224	Contact Mounting Plate
E1	196398	Screw for E

Friden, Inc.

PUNCH PARITY CHECK - FIGURE 11

Electrical Parts

PUNCH PARITY CHECK - FIGURE 11

Electrical Parts

A- COMPLETE ASSEMBLY

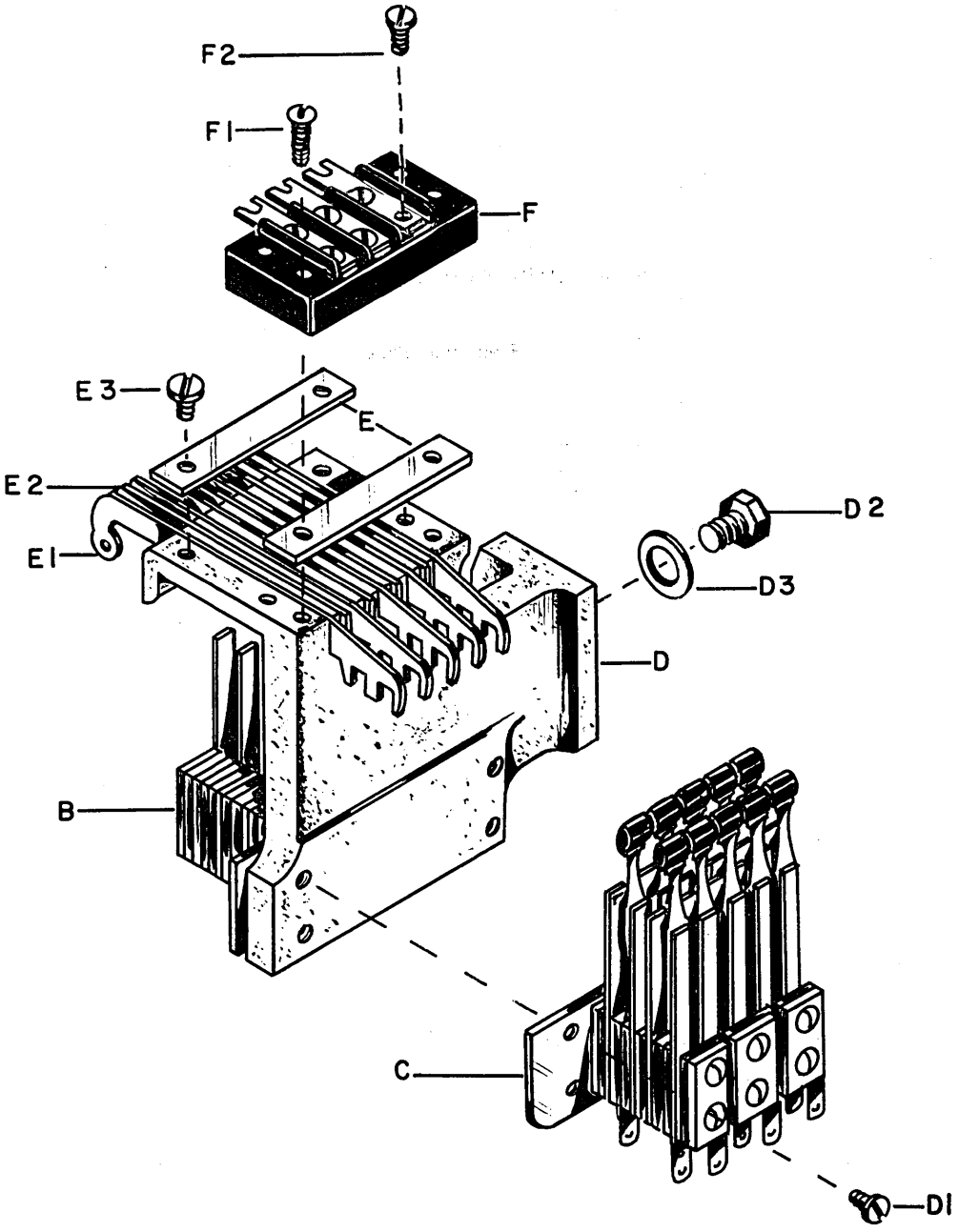

PUNCH PARITY CHECK - FIGURE 11

Electrical Parts

Ref. No.	Part No.	Part Name
A	1040300	Punch Parity Check Assembly (normally open)
A	1040290	Punch Parity Check Assembly (normally closed)
B	1046346	Upper Contact Assembly (normally open)
B	1046344	Upper Contact Assembly (normally closed)
C	1046345	Lower Contact Assembly (normally open)
C	1046343	Lower Contact Assembly (normally closed)
D	1046066	Punch Parity Check Casting
D1	2650	Screw for mounting B and C to D
D2	77063	Screw for mounting D to Punch Casting
D3	1090254	Washer for D2
E	1040307	Plate to retain Contact Operators
E1	1040304	Contact Operator, Lower
E2	1040303	Contact Operator, Upper
E3	186712	Screw for mounting Upper E to D
F	1053976	Terminal Block
F1	1058183	Screw for mounting F and Lower E
F2	1046272	Screw for Terminal Contacts

TAPE READER CONTACTS - FIGURE 12

Electrical Parts

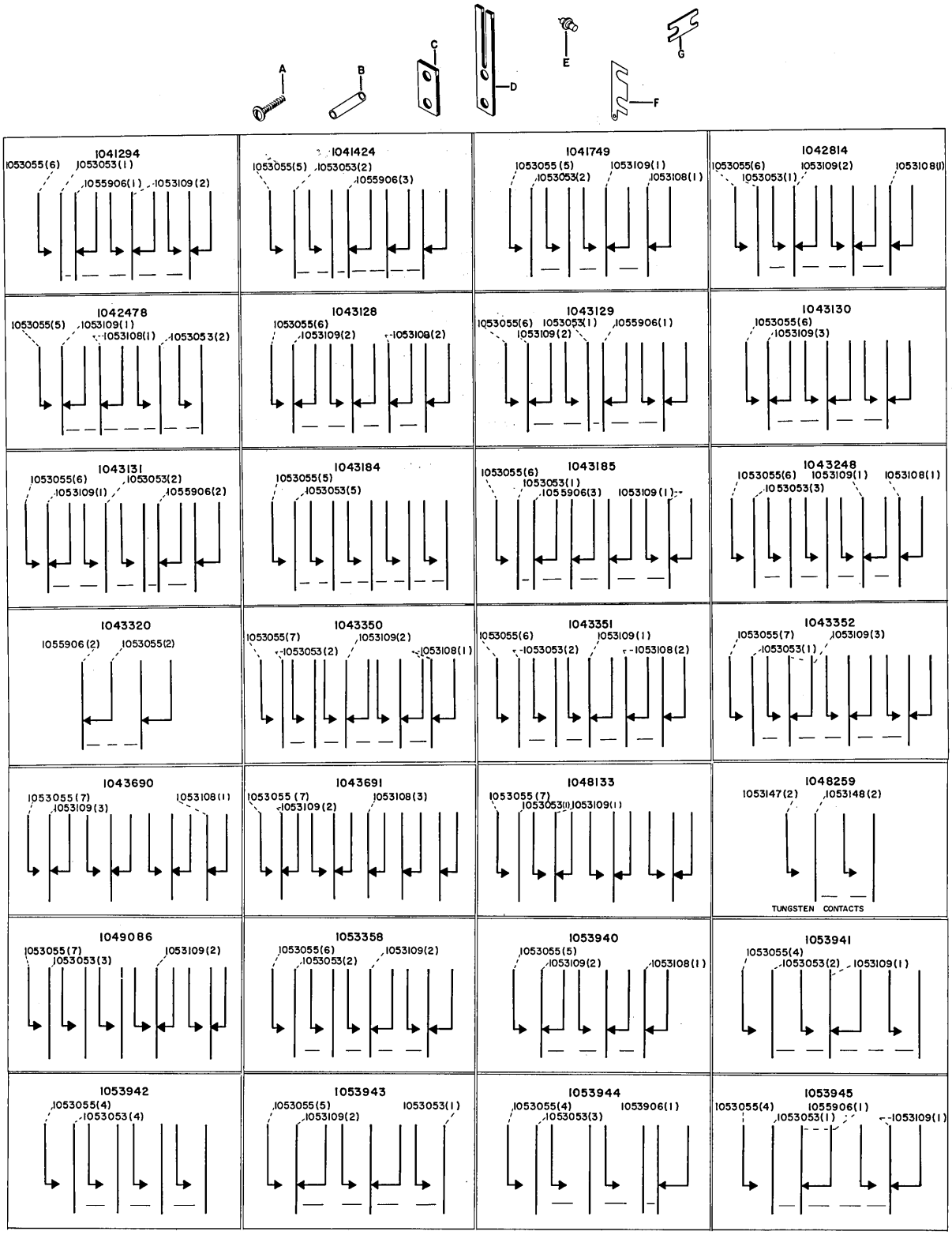

TAPE READER CONTACTS - FIGURE 12

Electrical Parts

Assembly Number	A	B	C	D	E	F
1041294	1058783	1058788	1058782	1053059	1053057/1053112	1053102
1041424	1058712	1058788	1058782	1053059	1053057/1053112	1053102
1041749	173211	25131	1058782	1053059	1053057/1053112	1053102
1042814	1058783	1040690	1058782	1053059	1053057/1053112	1053102
1042478	173212	25131	1058782	1053059	1053057/1053112	1053102
1043128	1058783	1040690	1058782	1053059	1053057/1053112	1053102
1043129	1058789	1058788	1058782	1053059	1053057/1053112	1053102
1043130	173212	1058713	1058782	1053059	1053057/1053112	1053102
1043131	1058789	1058788	1058782	1053059	1053057/1053112	1053102
1043184	1058783	1058713	1058782	1053059	1053057/1053112	1053102
1043185	1058789	1058788	1058782	1053059	1053057/1053112	1053102
1043248	1058789	1058788	1058782	1053059	1053057/1053112	1053102
1043320	173215	100229	302948 302949	1053059	1053057/1053112	1053102
1043350	1043909	1043903	1058782	1053059	1053057/1053112	1053102
1043351	1040362	1043151	1058782	1053059	1053057/1053112	1053102
1043352	1043910	1043902	1058782	1053059	1053057/1053112	1053102
1043690	1040339	1043902	1058782	1053059	1053057/1053112	1053102
1043691	1040337	1043903	1058782	1053059	1053057/1053112	1053102
1048133	1040337	1048643	302948	1053059	1053057/1053112	1053102
1048259	1053107	100229	302948 302949	1053059	1053057/1053112	1053102
1049086	1043909	1043903	1058782	1053059	1053057/1053112	1053102
1053358	1058783	1058788	1058782	1053059	1053057/1053112	1053102
1053940	173211	132622	302948	1053059	1053057/1053112	1053102
1053941	173209	133208	302948	1053059	1053057/1053112	1053102
1043942	173210	100098	302948	1053059	1053057/1053112	1053102
1053943	173211	132622	302948	1053059	1053057/1053112	1053102
1053944	173210	100098	302948	1053059	1053057/1053112	1053102
1053945	173209	133208	302948	1053059	1053057/1053112	1053102

G See "L" Figure 14, Electrical Parts Section

TAPE READER CONTACTS - FIGURE 12-1

Electrical Parts

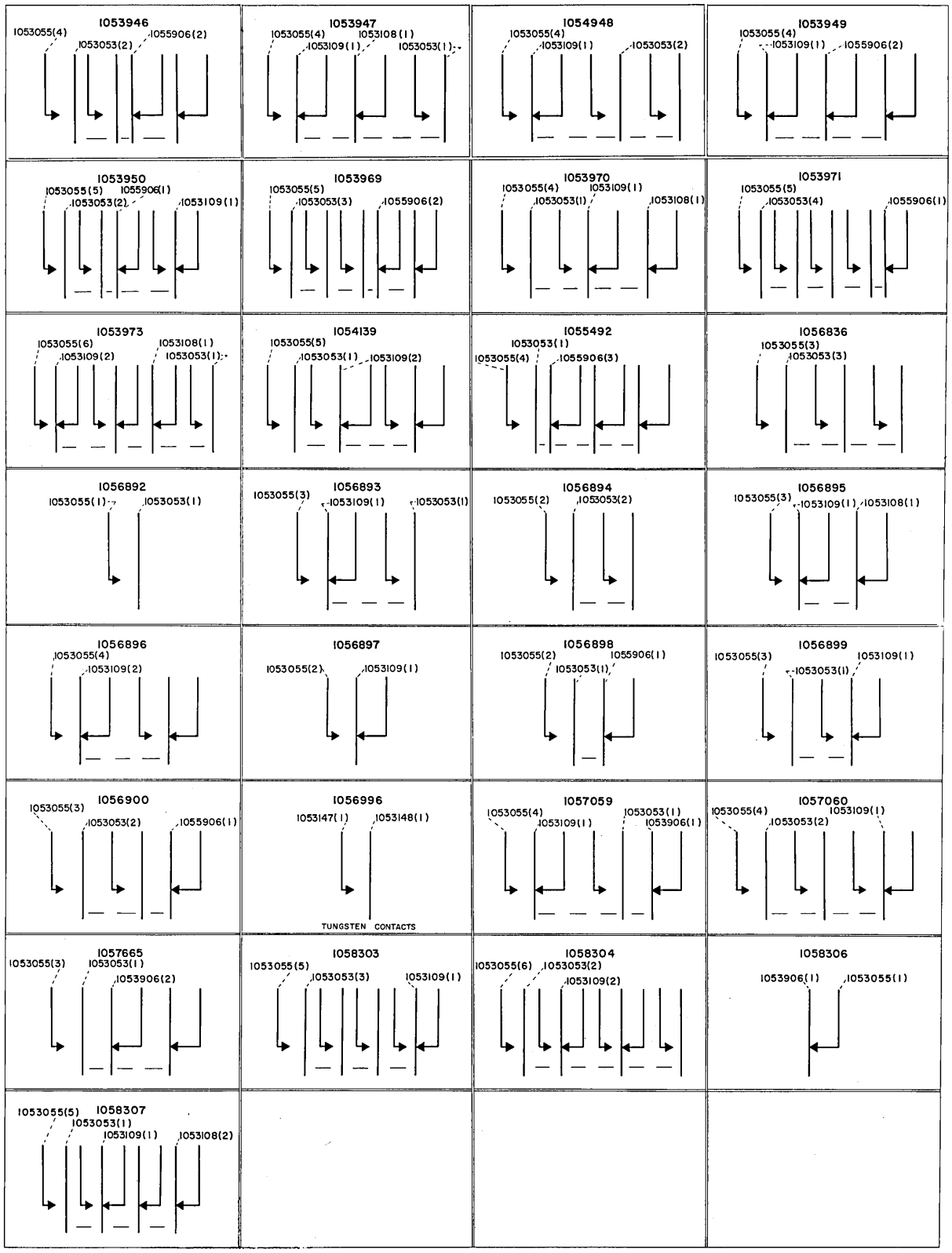

TAPE READER CONTACTS - FIGURE 12-1

Electrical Parts

Assembly Number	A	B	C	D	E	F
1053946	173210	100098	302948	1053059	1053057/1053112	1053102
1053947	173209	133208	302948	1053059	1053057/1053112	1053102
1053948	173209	133208	302948	1053059	1053057/1053112	1053102
1053949	173209	133208	302948	1053059	1053057/1053112	1053102
1053950	173211	25131	1058782	1053059	1053057/1053112	1053102
1053969	1058712	100397	1058782	1053059	1053057/1053112	1053102
1053970	173209	133208	302948	1053059	1053057/1053112	1053102
1053971	1058783	1058713	1058782	1053059	1053057/1053112	1053102
1053973	1058789	1058788	1058782	1053059	1053057/1053112	1053102
1054139	173211	132622	302948	1053059	1053057/1053112	1053102
1055492	173210	100098	302948	1053059	1053057/1053112	1053102
1056836	173207	100237	302948	1053059	1053057/1053112	1053102
1056892	1091745	167187	302948 302949	1053059	1053057	1053102
1056893	1053106	100759	302948 302949	1053059	1053057/1053112	1053102
1056894	1053107	100229	302948 302949	1053059	1053057/1053112	1053102
1056895	1053106	100759	302948 302949	1053059	1053057/1053112	1053102
1056896	173219	100606	302948	1053059	1053057/1053112	1053102
1056897	173203	100227	302948 302949	1053059	1053057	1053102
1056898	173204	100229	302948 302949	1053059	1053057/1053112	1053102
1056899	1053106	100759	302948 302949	1053059	1053057/1053112	1053102
1056900	173207	100237	302948	1053059	1053057/1053112	1053102
1056996	1091745	167187	302948 302949	1053059	1053057	1053102
1057059	173209	133208	302948	1053059	1053057/1053112	1053102
1057060	173209	133208	302948	1053059	1053057/1053112	1053102
1057665	173207	100237	302948	1053059	1053057/1053112	1053102
1058303	173211	25131	1058782	1053059	1053057/1053112	1053102
1058304	1058789	1058788	1058782	1053059	1053057/1053112	1053102
1058306	1091745	167187	302948 302949	1053059	1053057	1053102
1058307	173212	132622	1058782	1053059	1053057/1053112	1053102

G See "L" Figure 14, Electrical Parts Section

TRANSLATOR - PERMUTATION ASSEMBLY - FIGURE 13

Electrical Parts

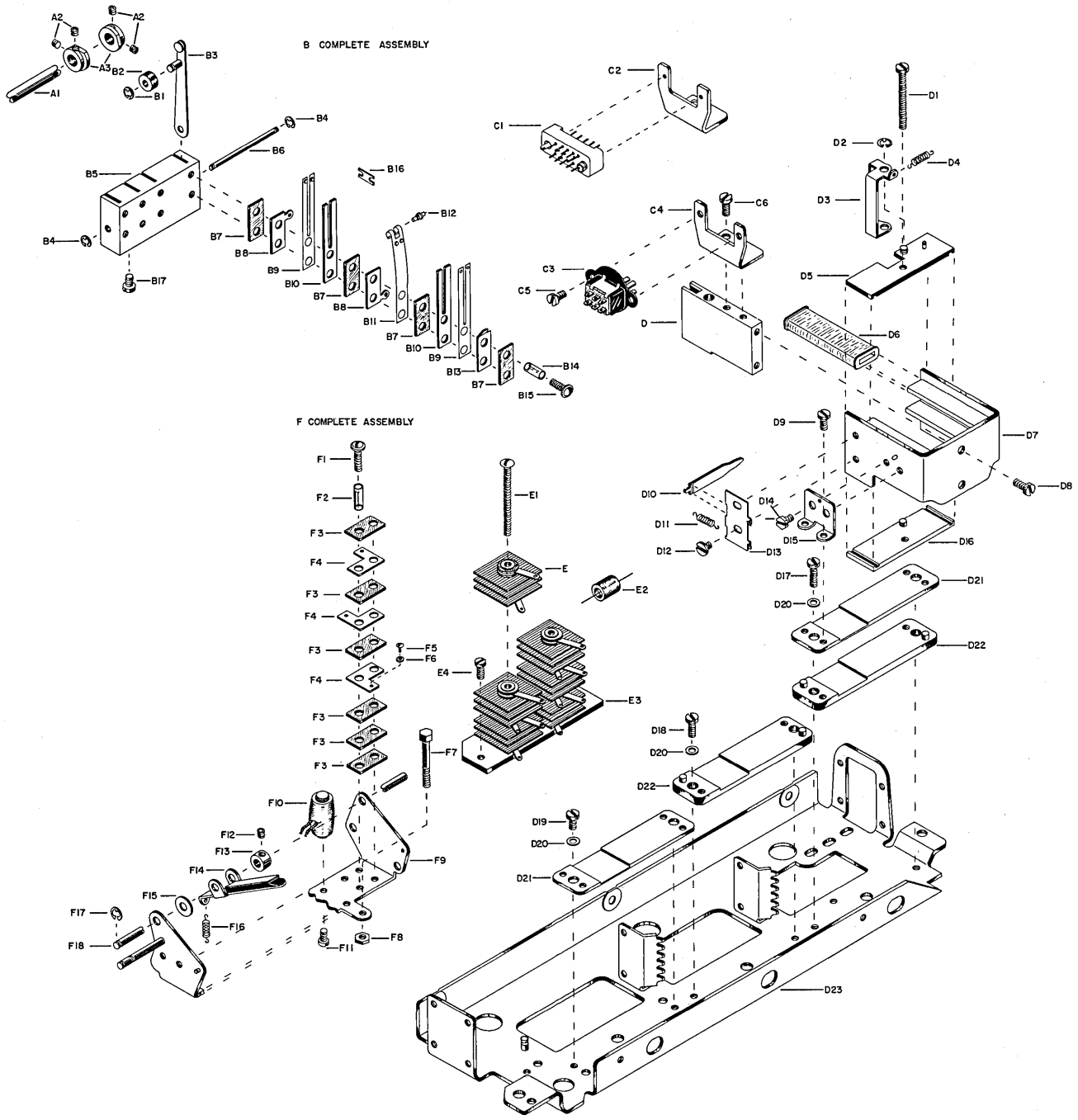

TRANSLATOR - PERMUTATION ASSEMBLY - FIGURE 13

Electrical Parts

Ref. No.	Part No.	Part Name
A1	1053303	Shaft
A2	165556	Set Screw for A3
A3	1053341	Timing Cam
B	1045200	Timing Contact Block Assembly, B1 thru B16, One Form C
B	1045201	Timing Contact Block Assembly, B1 thru B16, Two Form C
B	1045202	Timing Contact Block Assembly, B1 thru B16, Three Form C
B	1045594	Timing Contact Block Assembly, B1 thru B16, Four Form C
B1	304056	Retaining Ring
B2	1053342	Roller
B3	1057099	Contact Lever Assembly
B4	1054348	Retaining Ring
B5	1045192	Contact Mounting Block
B6	1045191	Pivot Shaft
B7	302948	Insulator
B8	1053220	Terminal
B9	1053055	Contact Spring Assembly
B10	1053059	Stiffener Terminal
B11	1053109	Contact Spring Assembly
B12	1053057	Contact Operator
B13	302964	Terminal
B14	100354	Screw Insulator
B15	173204	Screw
B16	1054149	Contact Operator
B17	1040503	Screw for mounting B5
C1	1042459	Continental Plug
C2	1043796	Terminal Bracket (Continental Plug)
C3	1020558	Jones Plug
C4	1020112	Terminal Bracket (Jones Plug)
C5	1090022	Screw for mounting C3 to C4
C6	1090799	Screw for mounting C2 & C4 to D
D	1020145	Permutation Magnet Channel
D1	52998	Screw
D2	25282	Retaining Clip
D3	1020142	Armature Knock-off Bail
D4	1091070	Spring for D3

TRANSLATOR - PERMUTATION ASSEMBLY - FIGURE 13

Electrical Parts

Ref. No.	Part No.	Part Name
D5	1020175	Permutation Magnet Top Strap Assembly
D6	1055816	Coil Assembly, 90 Volt, 1500 Ohm
D6	1055901	Coil Assembly, 48 Volt, 800 Ohm
D7	300219	Permutation Magenet Yoke & Core Assembly
D8	1090799	Screw for mounting D to D7
D9	1040497	Screw for mounting D15 to D21
D10	1053986	Armature (Short Tip)
D10	1053985	Armature (Long Tip)
D11	1054792	Spring for D10
D12	186636	Screw for mounting D13 to D7
D13	1020141	Armature Pivot & Spring Bracket
D14	1056811	Screw for mounting D15 to D7
D15	300216	Mounting Bracket
D16	1020176	Permutation Magnet Bottom Strap Assembly
D17	1090014	Screw for mounting D21 and D22 to D23
D18	1057233	Screw for mounting D22 to D23
D19	1090003	Screw for mounting D21 to D23
D20	1091220	Washer
D21	1020701	Magnet Spacing Plate
D22	1020700	Magnet Spacing Plate
D23	300064	Bottom Plate
E	1056787	Rectifier
E1	1055927	Screw for mounting three of E to E3
E2	1055988	Surge Suppressor
E3	1055925	Rectifier Mounting Plate
E4	1090003	Screw for mounting E3 to D23
F	1055008	Clutch Magnet Assembly (90 Volt)
F	1055888	Clutch Magnet Assembly (48 Volt)
F1	1053107	Screw
F2	100354	Screw Insulator
F3	1020897	Insulator
F4	304311	Terminal
F5	38794	Terminal Screw
F6	1057580	Lockwasher
F7	1055004	Adjusting Screw
F8	6503	Nut for F7
F9	1053320	Mounting Bracket Assembly
F10	1055814	Coil Assembly (90 Volt)
F10	1053321	Coil Assembly (48 Volt)
F11	3500	Screw for mounting F10
F12	133798	Set Screw

TRANSLATOR - PERMUTATION ASSEMBLY - FIGURE 13

Electrical Parts

Ref. No.	Part No.	Part Name
F13	304090	Armature Pivot Shaft Collar
F14	313841	Clutch Armature
F15	45690	Spacer
F16	26513	Spring for F14
F17	1092125	Retaining Clip
F18	1053322	Armature Shaft

TRANSLATOR - FRAME ASSEMBLY -FIGURE 13-1

Electrical Parts

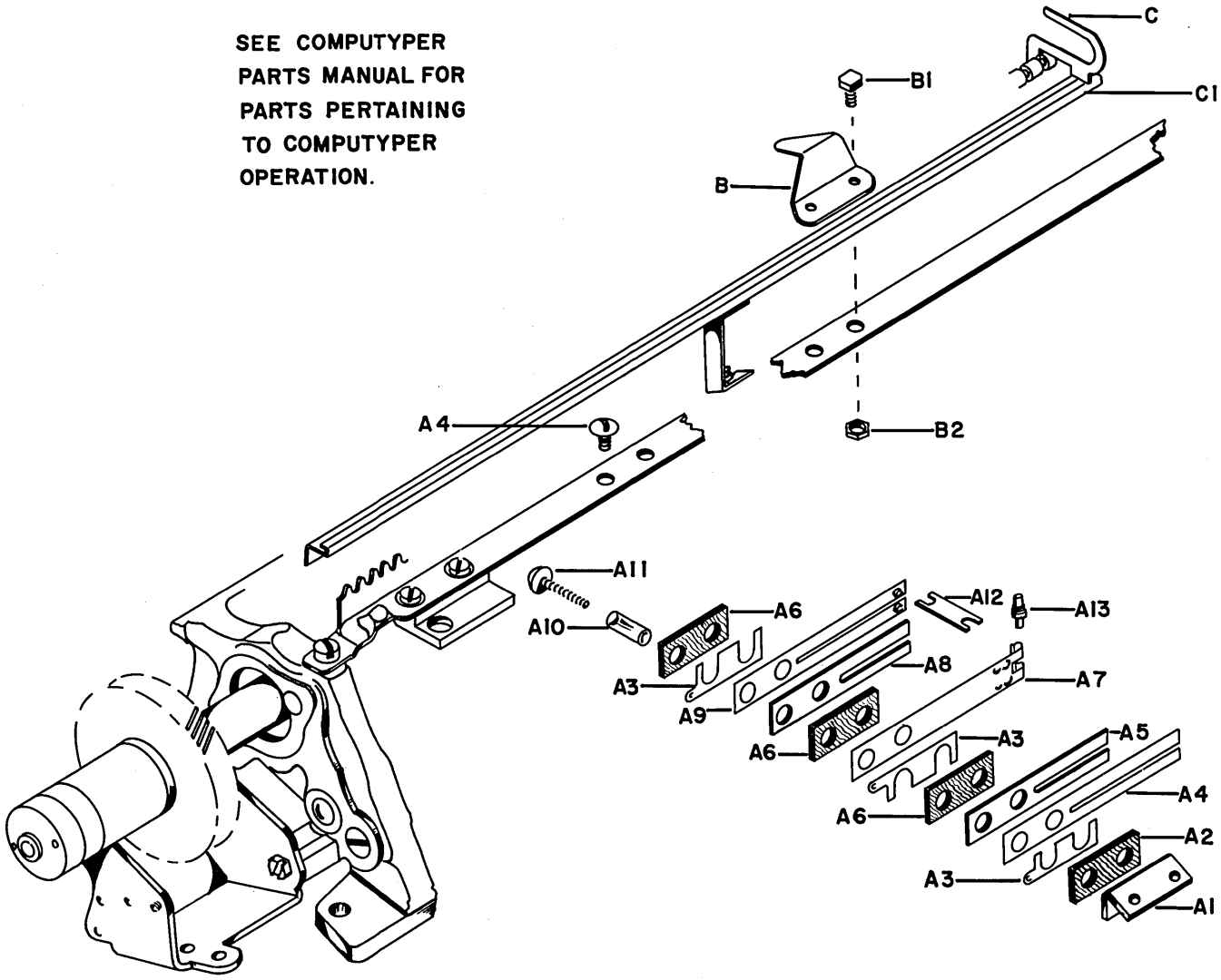

TRANSLATOR - FRAME ASSEMBLY -FIGURE 13-1

Electrical Parts

Ref. No.	Part No.	Part Name
A	1043877	Complete Switch Delay Control
A1	1043878	Contact Mounting Bracket
A2	302949	Insulator
A3	1053102	Terminal
A4	1053055	Contact Spring Assembly
A5	1053059	Contact Stiffener
A6	302948	Insulator
A7	1053218	Contact Spring Assembly
A8	1057841	Contact Stiffener
A9	1053217	Contact Spring Assembly
A10	100227	Screw Insulator
A11	1057219	Screw
A12	1040258	Shaft - Contact Operator
A13	1053057	Contact Operator
A14	155180	Screw to mount A1
B	1040259	Bail Stop
B1	6002225	Screw to Mount B
B2	6003024	Nut for B1
C	1043965	Seeker for operating C1
C1	1043886	Bail Assembly

CONTACT OPERATORS, WIRES, FLEXIBLE TUBING, AND TERMINALS - FIGURE 14

Electrical Parts

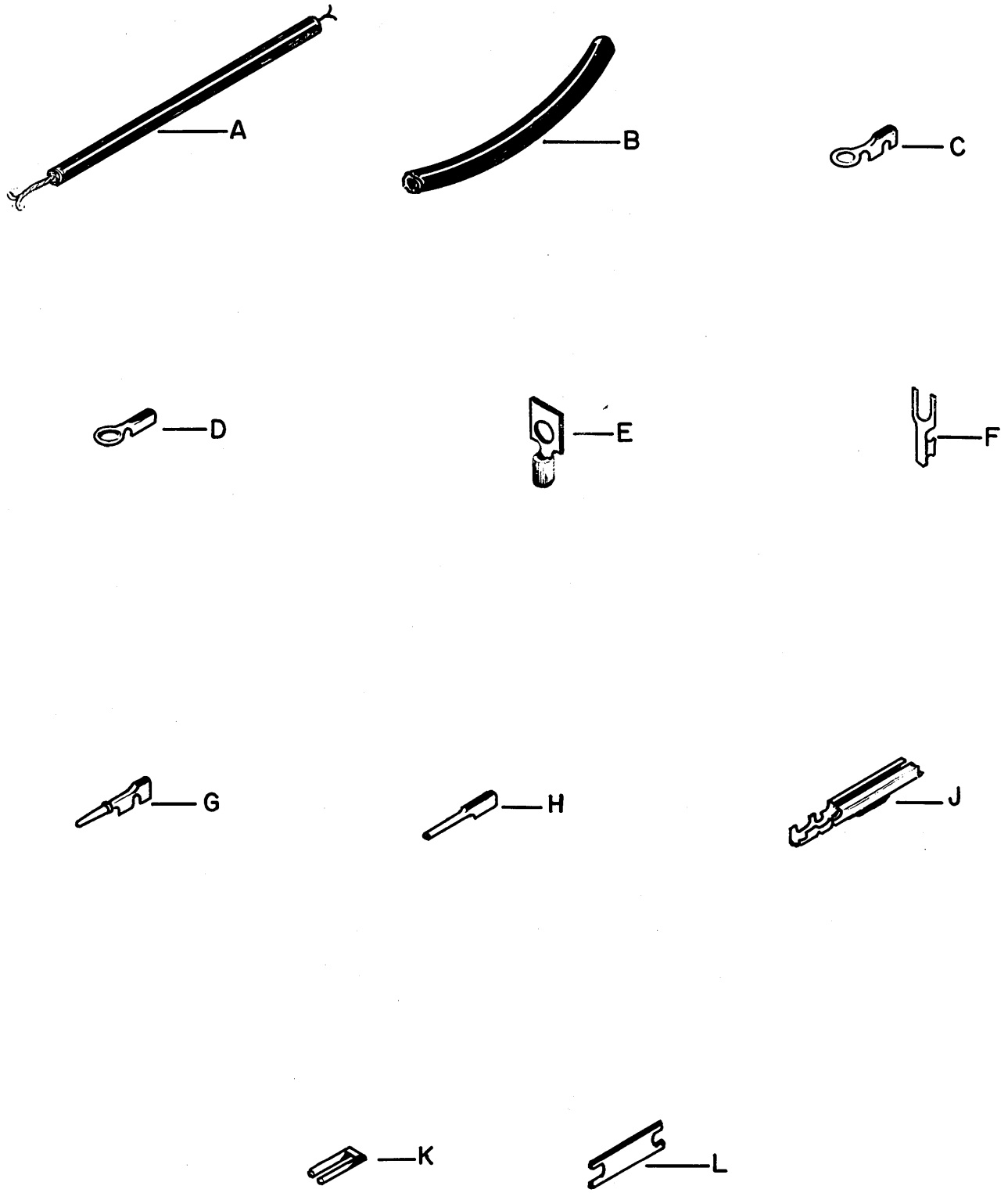

CONTACT OPERATORS, WIRES, FLEXIBLE TUBING, AND TERMINALS - FIGURE 14

Electrical Parts

Ref. No.	Part No.	Part Name
		ALL WIRE MUST BE ORDERED IN MULTIPLES OF 25 FEET
A	1044250	22 Gage Wire, Black Nylon Covering, Polyvinyl-Plastic Insulation
A	1053674	18 Gage Wire, Black Synthetic Resin Insulation
A	1054470	22 Gage Wire, Black Braided Cotton Covering, Thermoplastic Insulation
A	1054132	24 Gage Solid Copper Wire, Braided Cotton Covering, Thermoplastic Insulation
A	1044251	22 Gage Wire, Yellow Polyvinyl-Plastic Insulation
A	1044252	22 Gage Wire, Various Colors Semi-rigid Polyvinyl Insulation, Specify Color (s)
A	1058746	22 Gage Wire, Various Colors Braided Cotton Covering, Thermoplastic Insulation, Specify Color (s)
A	1059044	24 Gage Braided Wire, no covering, no insulation
B	1058292	Flexible Tubing - Length, as req. Normal I.D., .027
B	1056006	Flexible Tubing - Length, 1 in Normal I.D., .042
B	1044593	Flexible Tubing - Length, 2 in Normal I.D., .042
B	1055203	Flexible Tubing - Length, 1/2 in Normal I.D., .053
B	1024792	Flexible Tubing - Length, 3/8 in Normal I.D., .053
B	1045713	Flexible Tubing - Length, 1/4 in Normal I.D., .059
B	1043214	Flexible Tubing - Length, 1/4 in Normal I.D., .076
B	1043934	Flexible Tubing - Length, 1/2 in Normal I.D., .076
B	1056633	Flexible Tubing - Length, 7/16 in Normal I.D., .076
B	1056670	Flexible Tubing - Length, 1 in Normal I.D., .076
B	1059070	Flexible Tubing - Length, 2 in Normal I.D., .076
B	1059039	Flexible Tubing - Length, 2 3/8 in Normal I.D., .076
B	1059108	Flexible Tubing - Length, 4 1/4 in Normal I.D., .076
B	1044260	Flexible Tubing - Length, 7/16 in Normal I.D., .085
B	1056737	Flexible Tubing - Length, 3/4 in Normal I.D., .095
B	1055831	Flexible Tubing - Length, 1 3/8 in Normal I.D., .095
B	1043933	Flexible Tubing - Length, 3 3/4 in Normal I.D., .106
B	1045002	Flexible Tubing - Length, 3 1/4 in Normal I.D., .106
B	1055994	Flexible Tubing - Length, 21 5/8 in Normal I.D., .133
B	1054874	Flexible Tubing - Length, 3 in Normal I.D., .133
B	1048638	Flexible Tubing - Length, 6 1/2 in Normal I.D., .133
B	1054493	Flexible Tubing - Length, 5 1/4 in Normal I.D., .133
B	1057898	Flexible Tubing - Length, 3/8 in Normal I.D., .133
B	1057899	Flexible Tubing - Length, 6 3/4 in Normal I.D., .133
B	1057900	Flexible Tubing - Length, 3 1/2 in Normal I.D., .133
B	1056150	Flexible Tubing - Length, 3/4 in Normal I.D., .133
B	1043937	Flexible Tubing - Length, 7/16 in Normal I.D., .133
B	1043213	Flexible Tubing - Length, 4 1/2 in Normal I.D., .133
B	1054629	Flexible Tubing - Length, 5 in Normal I.D., .166
B	1058736	Flexible Tubing - Length, 3 in Normal I.D., .166

CONTACT OPERATORS, WIRES, FLEXIBLE TUBING, AND TERMINALS - FIGURE 14

Electrical Parts

Ref. No.	Part No.	Part Name
B	1058768	Flexible Tubing - Length, 6 in Normal I.D., .166
B	1043429	Flexible Tubing - Length, 1 3/4 in Normal I.D., .166
B	1055834	Flexible Tubing - Length, 1 in Normal I.D., .186
B	1055835	Flexible Tubing - Length, 2 1/4 in Normal I.D., .186
B	1045540	Flexible Tubing - Length, 5 1/4 in Normal I.D., .186
B	1054873	Flexible Tubing - Length, 3 in Normal I.D., .263
B	1044865	Flexible Tubing - Length, 16 in Normal I.D., .263
B	1043212	Flexible Tubing - Length, 6 1/2 in Normal I.D., 5/16
B	1044316	Flexible Tubing - Length, 7 in Normal I.D., 5/16
B	1044305	Flexible Tubing - Length, 10 in Normal I.D., 5/16
B	1043418	Flexible Tubing - Length, as req. Normal I.D., 3/8
B	1045436	Flexible Tubing - Length, 10 in Normal I.D., 3/8
B	1044512	Flexible Tubing - Length, 1 3/8 in Normal I.D., 1/2
B	1044874	Flexible Tubing - Length, as req. Normal I.D., 1/2
B	1045871	Flexible Tubing - Length, as req. Normal I.D., 5/8
C	1044249	Terminal Clip for 24-20 Gage Insulated Wire with end stripped. Inside Diameter of Loop; .128: Outside Diameter of Loop; .186
D	1055944	Insulation Piercing Terminal Clip for 22 Gage Wire. InsideDiameter of Loop; .128: Outside Diameter of Loop; .188
E	1061389	Terminal for 18 Gage Insulated Wire with end stripped. For Number 6 Screw
E	1056151	Terminal for 18 Gage Insulated Wire with end stripped. For Number 10 Screw
F	313362	Insulation Piercing Terminal Spade for 22 Gage Wire. Spade Gap: .1285
F	313361	Insulation Piercing Terminal Spade for 22 Gage Wire. Spade Gap: .115
F	310939	Insulation Piercing Terminal Spade for 22 Gage Wire. Spade Gap: .187
F	115186	Insulation Piercing Terminal Spade for 22 Gage Wire. Spade Gap: .133
G	1044248	Plug for 22 Gage Plastic Covered Wire with end stripped
G	1044274	Plug for 22 Gage Fabric Covered Wire with end stripped
H	187243	Insulation Piercing Plug for 22 Gage Fabric covered Wire
J	313408	Insulation Piercing Two Plug Receptacle or Plastic Covered Wire
K	1043826	Terminal Spring. Outside Diameter; .072: Inside Diameter; .056
K	1057285	Terminal Spring. Outside Diameter; .078: Inside Diameter; .062
L	1055407	Contact Operator; Shaft To Shaft Distance: .100
L	1053111	Contact Operator; Shaft To Shaft Distance: .124
L	1056984	Contact Operator; Shaft To Shaft Distance: .156
L	1053058	Contact Operator; Shaft To Shaft Distance: .191
L	1056985	Contact Operator; Shaft To Shaft Distance: .21875

CONTACT OPERATORS, WIRES, FLEXIBLE TUBING, AND TERMINALS - FIGURE 14

Electrical Parts

Ref. No.	Part No.	Part Name
L	1053110	Contact Operator; Shaft To Shaft Distance: .246
L	1044574	Contact Operator; Shaft To Shaft Distance: .279
L	1040258	Contact Operator; Shaft To Shaft Distance: .328
L	1054149	Contact Operator; Shaft To Shaft Distance: .379
L	1057982	Contact Operator; Shaft To Shaft Distance: .439
L	1040395	Contact Operator; Shaft To Shaft Distance: .500

Friden, Inc.

TAPE SUPPLY DRUM - TILTING MECHANISM - FIGURE 1

Covers

PARTS LIST

FRIDEN

FLEXOWRITER-JUSTOWRITER

COVERS

Figure 1-Tape Supply Drum & Tilting Mechanism

Figure 2-Base Assembly

Figure 3-Rear Cover and Paper Support Assembly

Figure 4-Paper Table Assembly

Figure 5-Front Cover

Figure 6-Clutch Cover

Figure 7-Rear Side Cover — w/o Punch

Figure 8-Punch Covers

Figure 9-Reader Covers — Lower

Figure 10-Reader Covers — Upper

Figure 11-Translator Cover

Figure 12-CR Magnet Cover

Figure 13-Bottom Plate

Figure 14-Selective Punch & Aux. Reader Covers

Figure 15-Selectadata

Figure 16-Motorized Punch & Reader Covers

FRIDEN, INC.
HOME OFFICE: SAN LEANDRO, CALIFORNIA
SALES AND SERVICE THROUGHOUT WORLD

Printed in U.S.A.

TAPE SUPPLY DRUM - TILTING MECHANISM - FIGURE 1

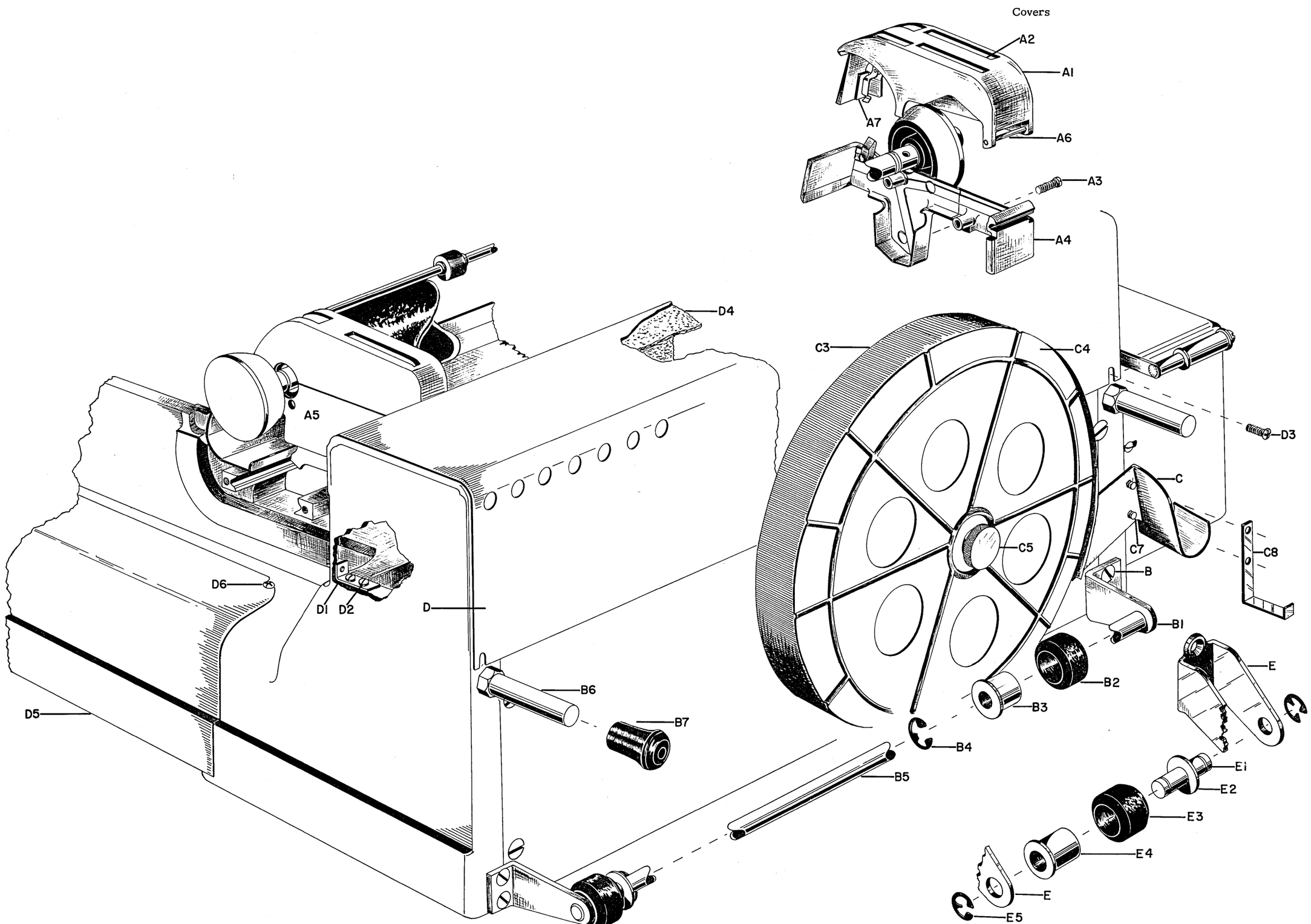

TAPE SUPPLY DRUM - TILTING MECHANISM - FIGURE 1

Covers

Ref. No.	Part No.	Part Name
A	1055914	Complete Assembly (includes A1, A2, A4, A6, & A7)
A1	1071622	Carriage End Cover - Upper L. H.
A2	1044965	Sound Deadener (not shown)
A3	1054903	Screw for A4 & A5
A4	1071620	Carriage End Cover - Lower L. H.
A5	1053857	Carriage End Cover Assembly - R. H.
A6	1071681	Pin
A7	1041580	Stop Pad
B	99	Screw for B1 & E
B1	1053675	Bracket
B2	1054987	Tire (Tilting)
B3	1054988	Roller for B1
B4	1054966	Clip
B5	1054989	Shaft
B6	1044744	Post (Tilting)
B7	1056714	Pad for B6
C	1021026	Drum & Hub Assembly (includes C1 & C2)
C1	1043081	Hub for Tape (not shown)
C2	1091792	Clip for C1
C3	1053730	Supply Roll Cover Assembly (includes C4, C5, & C6)
C4	1053731	Supply Roll Cover
C5	1091982	Hand Screw
C6	60488	Clip for C5 (not shown)
C7	186639	Screw for C8
C8	1054437	Tape Guide
D		Rear Cover - see Figure 3
D1	1054021	Bracket for D
D2	1090007	Screw for D1
D3	1045547	Screw for D
D4		Sound Deadener - see Figure 3
D5		Clutch Cover - see Figure 6
D6	1045547	Screw for D5
E	6315053	Bracket
E1	6315054	Shaft for E3 & E4
E2	6004427	Washer
E3	1054987	Tire
E4	1054988	Roller
E5	6004428	C-Clip

Friden, Inc.

BASE ASSEMBLY - FIGURE 2

Covers

BASE ASSEMBLY - FIGURE 2

Covers

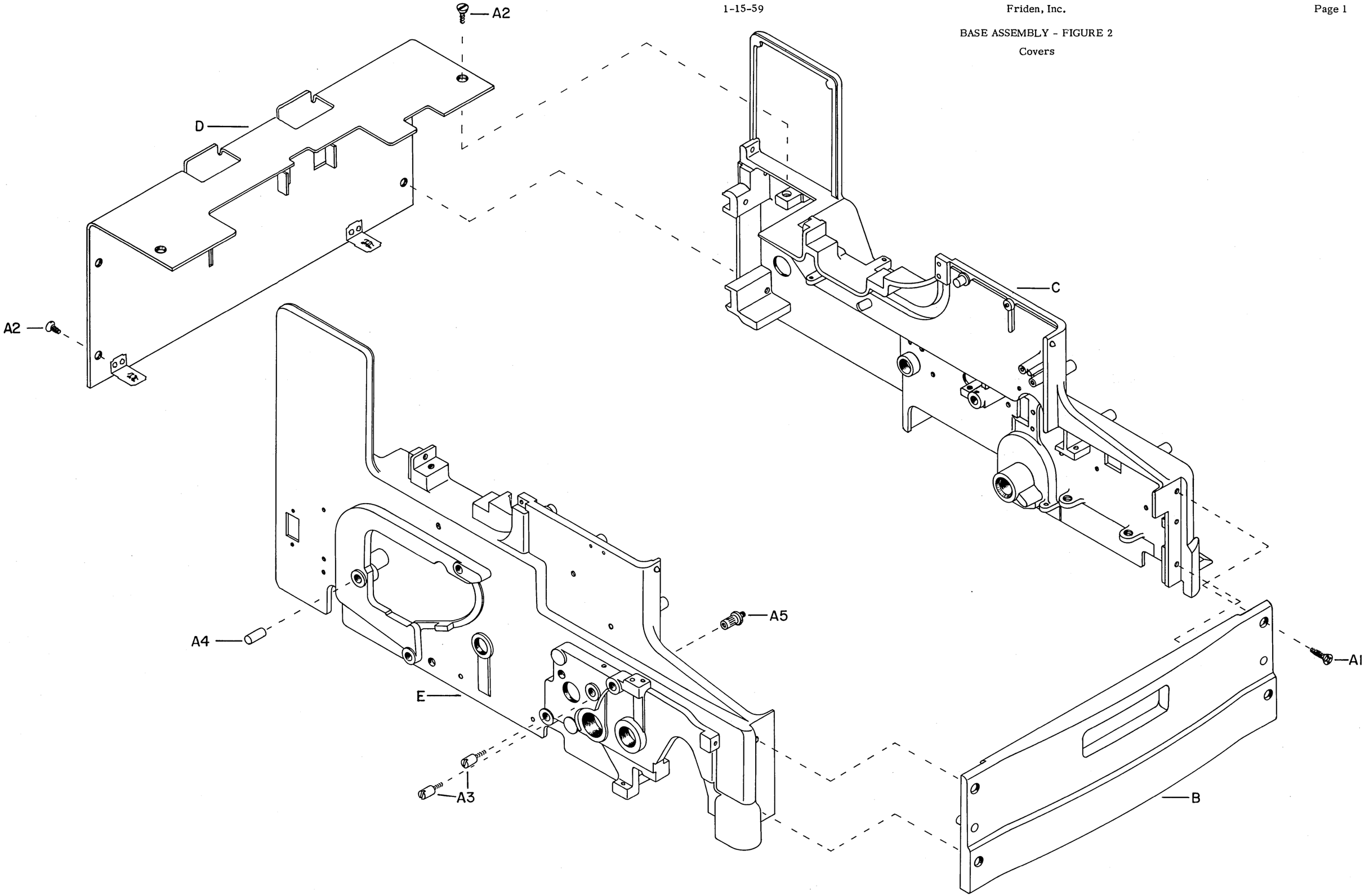

BASE ASSEMBLY - FIGURE 2

Covers

Ref. No.	Part No.	Part Name
A1	1045875	Screw
A2	1045558	Screw
A3	1040076	Stud for mounting Reader
A4	131219	Stud for mounting Punch
A5	1040075	Insert for Reader Mounting Stud
B	1053330	Front Base Plate, specify color
C	1053768	Right Base Plate, specify color
D	1043512	Rear Base Plate, specify color
E	1053767	Left Base Plate, specify color
F	1043980	Complete Base Assembly (includes A1, A2, A4, B, C, D, E), specify color

REAR COVER & PAPER SUPPORT ASSEMBLY - FIGURE 3

Covers

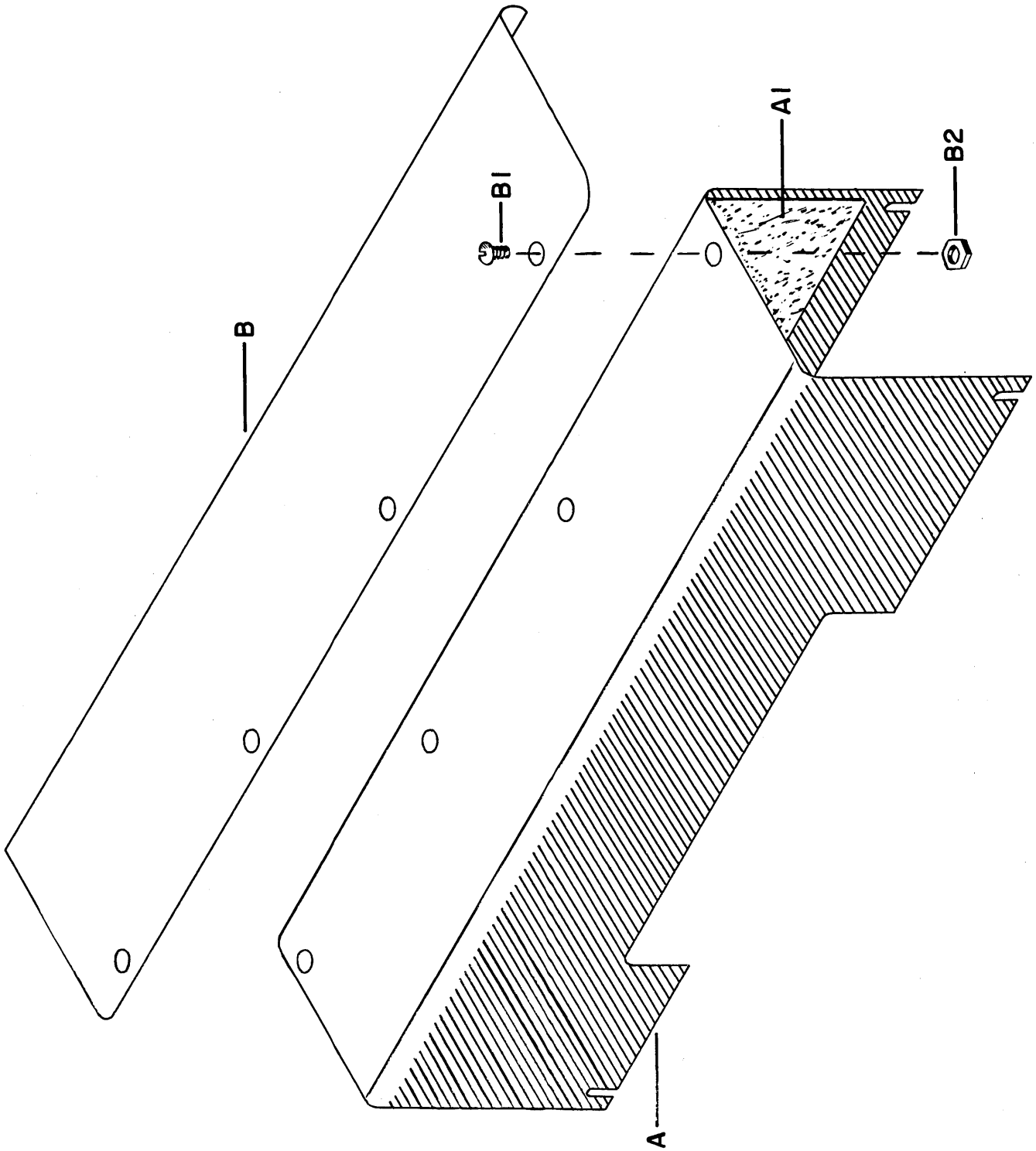

REAR COVER & PAPER SUPPORT ASSEMBLY - FIGURE 3

Covers

Ref. No.	Part No.	Part Name
A	1042703	Rear Cover & Paper Support Assembly (includes A, A1, B, B1, B2), specify color
A	1053723	Rear (Relay) Cover (All Flexowriters except FG Series), specify color
A	1056221	FG Series
A	1054046	Justowriter Recorder & Recorder-Reproducer
A	1043524	Justowriter Reproducer
A1	1044968	Sound-Deadener (Front Section) Right hand
A1	1044967	Sound-Deadener (Front Section) Left hand
A1	1044969	Sound-Deadener (Top Section)
A1	1044970	Sound-Deadener (Back Section)
B	1042702	Paper Support (specify color)
B1	1045547	Screw
B2	23815	Nut

PAPER TABLE ASSEMBLY - FIGURE 4

Covers

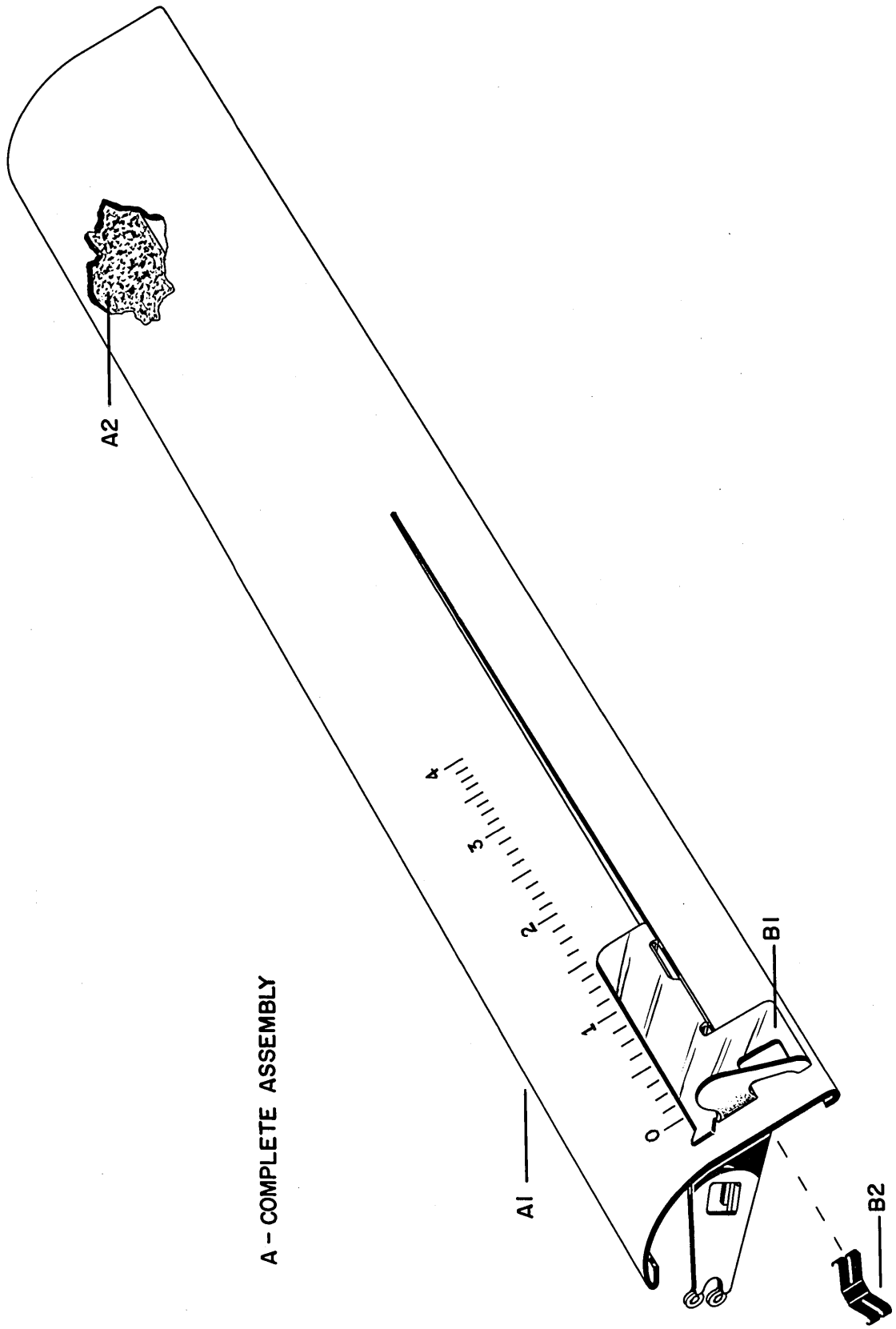

A - COMPLETE ASSEMBLY

PAPER TABLE ASSEMBLY - FIGURE 4

Covers

Ref. No.	Part No.	Part Name
A	1054978	12" Paper Table Assembly (includes Sound Deadener 1044962)
A	1055577	16" Paper Table Assembly (includes Sound Deadener 1044963)
A	1055783	20" Paper Table Assembly (includes Sound Deadener 1044964)
A1	1040684	12" Paper Table Cover (specify color)
A1	1040685	16" Paper Table Cover (specify color)
A1	1040686	20" Paper Table Cover (specify color)
A2	1044962	Sound Deadener (12" Paper Table)
A2	1044963	Sound Deadener (16" Paper Table)
A2	1044964	Sound Deadener (20" Paper Table)
B1	1072851	Gage
B2	1072853	Retaining Clip for B1

FRONT COVER

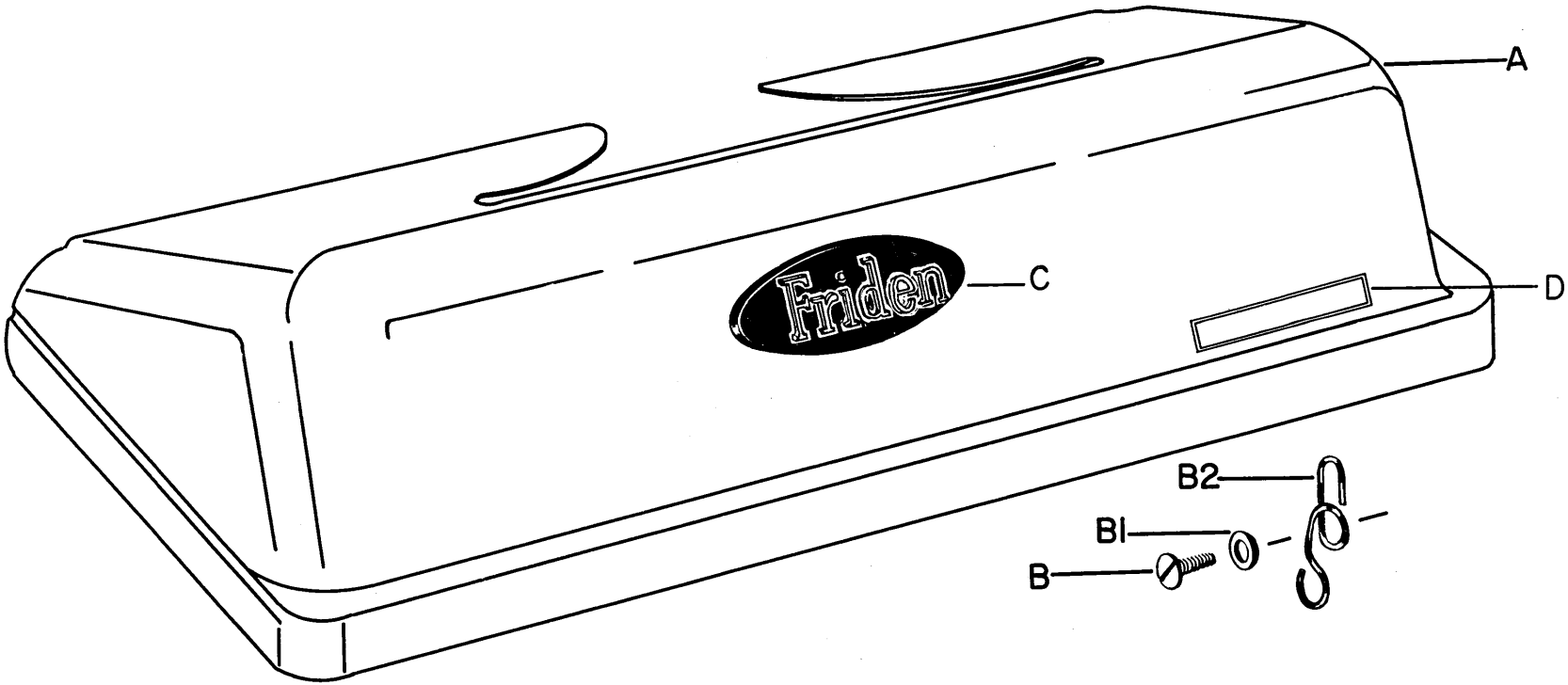

FRONT COVER - FIGURE 5

Covers

Ref. No.	Part No.	Part Name
A	1043629	Front Cover Flexowriter (includes A, B, B1 & B2)
A	1053718	Front Cover Justowriter (includes A, B, B1 & B2)
A	1043628	Front Cover only (Flexowriter) - specify color
A	1054737	Front Cover only (Justowriter) - specify color
B	1091824	Screw
B1	1091487	Washer
B2	1062945	Spring - right hand
B2	1062944	Spring - left hand
C	6319001	Friden Medallion - Brown
C	6319002	Friden Medallion - Blue
C	1092253	Speed Nut to mount Medallion
D		Name Strips for Flexowriter & Justowriter
D	6319003	Flexowriter - Brown
D	6319004	Flexowriter - Blue
D	6319006	Programatic Flexowriter - Brown
D	6319007	Programatic Flexowriter - Blue
D	6319008	Justowriter - Brown
D	6319009	Justowriter - Blue

CLUTCH COVER - FIGURE 6

Covers

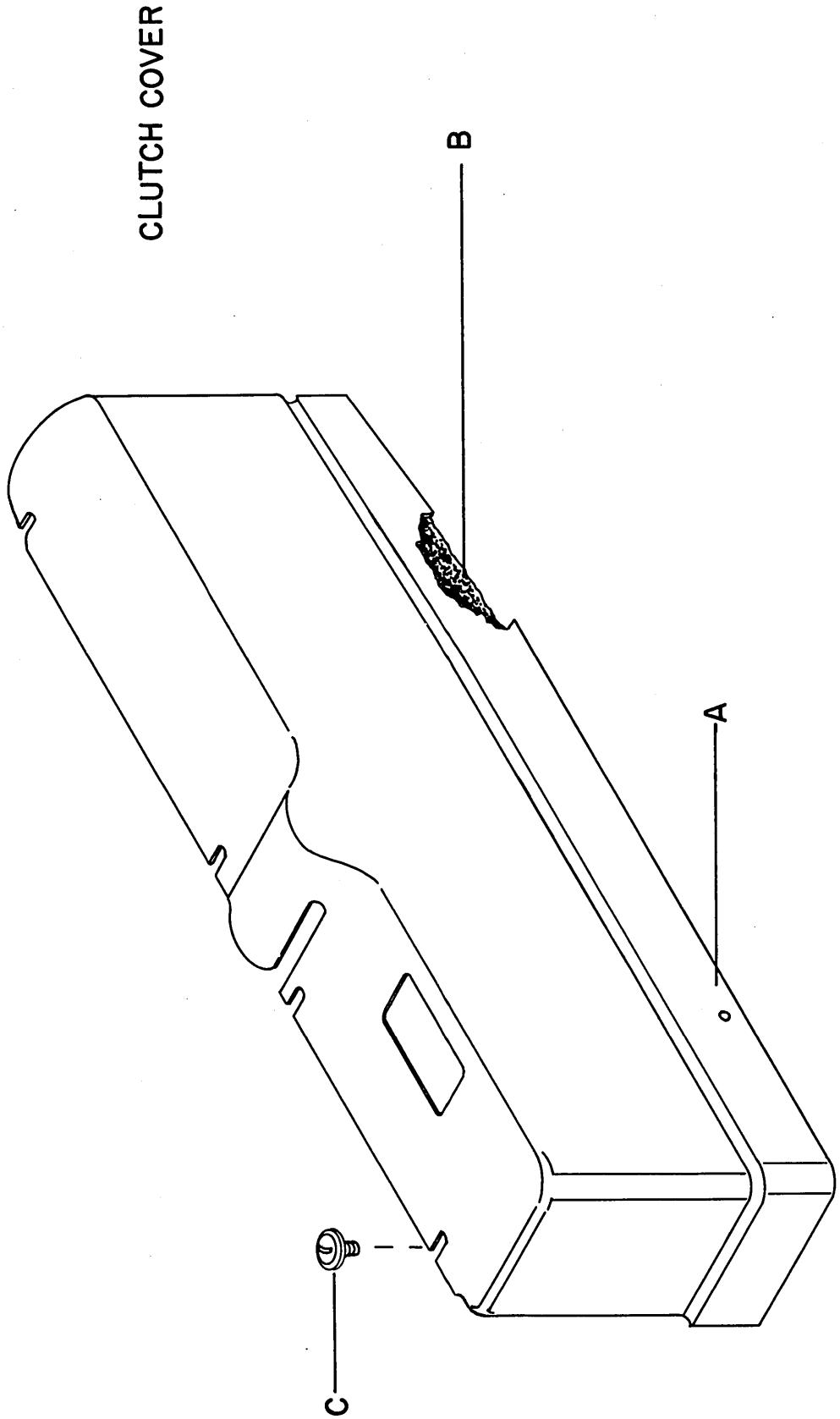

CLUTCH COVER - FIGURE 6

Covers

Ref. No.	Part No.	Part Name
A	1055937	Clutch Cover for: (specify color) FPC-8P - Double & Single Case FPC-5P - 3 bank & 4 bank FPCP-8 - Flexowriter CTC-5 & 8 Flexowriters SPD-C & SPS-C SFD & SPD - SPS - Flexowriters SFD President Flexowriters Recorder-Reproducer
A	1053720	Clutch Cover for: (specify color) All Justowriters & President Flexowriters FL Rec. Rep. & FPC-8, Double & Single Case - Rec. Rep. Flexowriters FG40 - FG80 & FC - Rec. Rep. Flexowriters TLR Flexowriters
B	1044972	Sound Deadener
C	1045547	Screw
C1	1046787	Screw used in this location only

REAR SIDE COVER - FIGURE 7

Covers

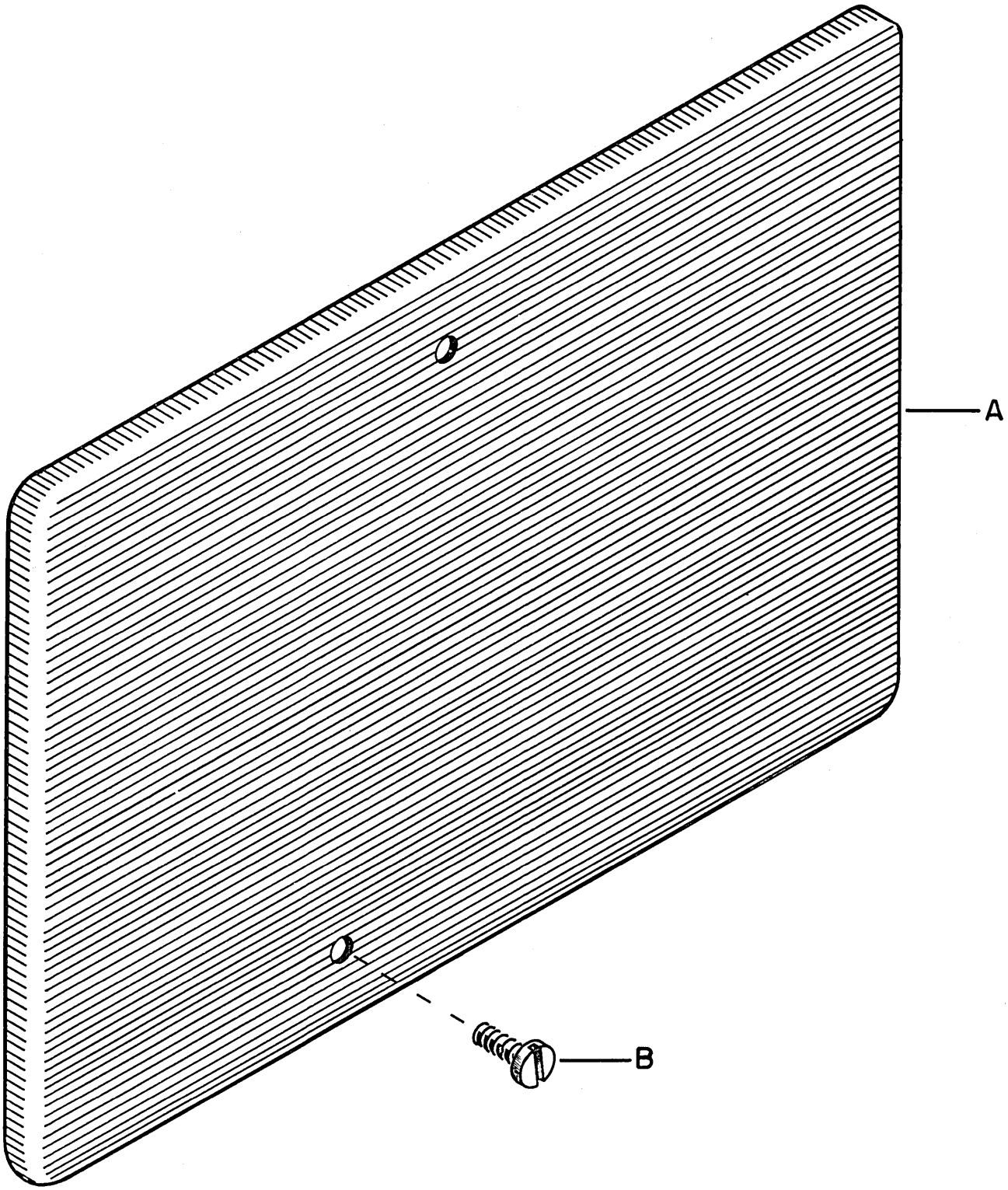

REAR SIDE COVER - FIGURE 7

Covers

Ref. No.	Part No.	Part Name
A	1054300	Rear Side Cover (with Reader only) - specify color
A	1054102	Rear Side Cover - Justowriter (see Justowriter section - Figure 5)
B	1091120	Screw

PUNCH COVERS - STANDARD & CARD PUNCH ASSEMBLY - FIGURE 8

Covers

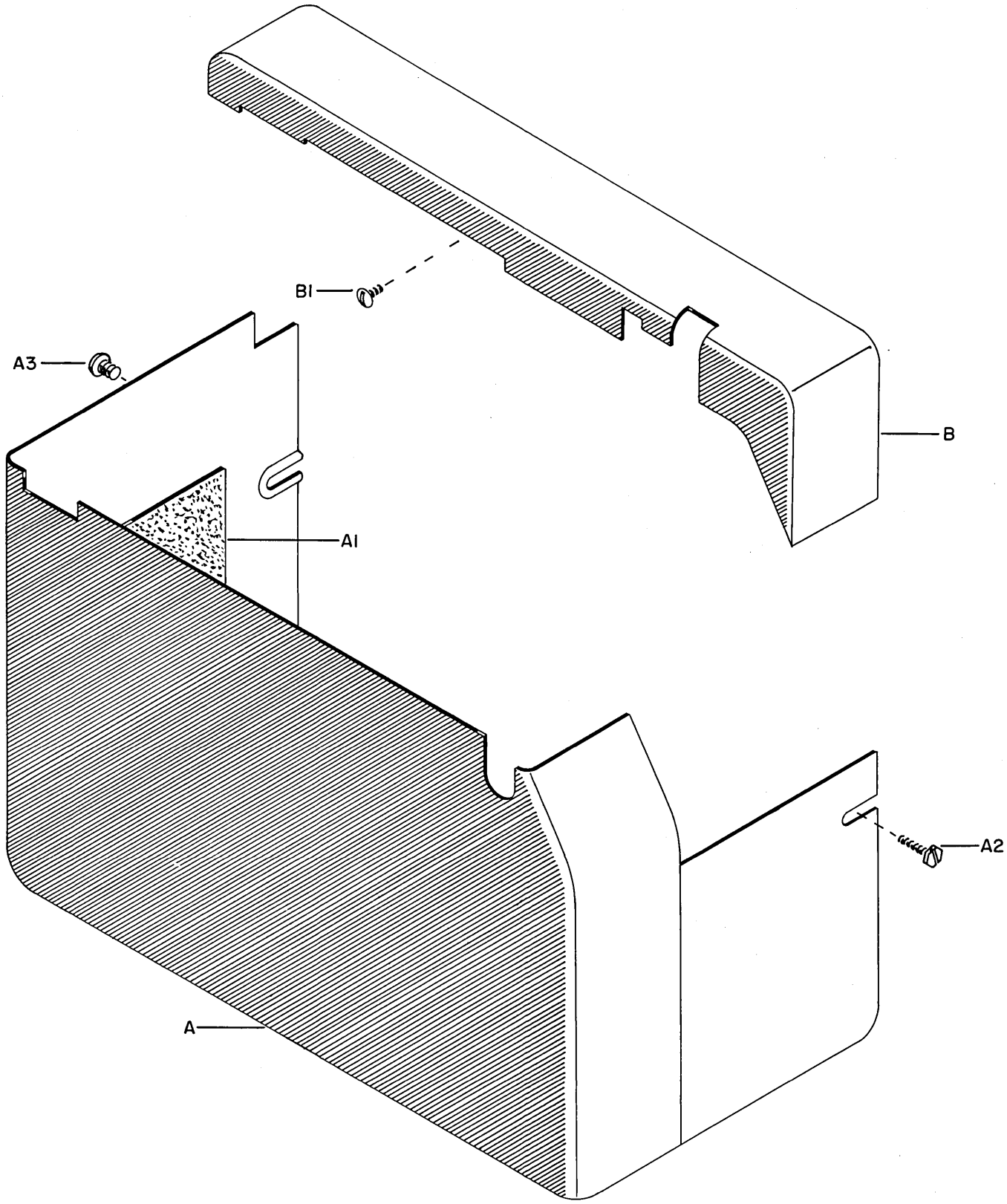

PUNCH COVERS - STANDARD & CARD PUNCH ASSEMBLY - FIGURE 8

Covers

Ref. No.	Part No.	Part Name
A	1058125	Lower Cover
A	1040186	Lower Cover (Card Punch)
A1	1044975	Sound Deadener (Card Punch)
A1	1044980	Sound Deadener (Standard Punch)
A2	5061	Screw
A3	1045547	Screw
B	1058116	Upper Cover (Standard Flexo. & Justo.)
B	1040184	Upper Cover (Card Punch)
B1	155180	Screw

READER COVERS - LOWER - FIGURE 9

Covers

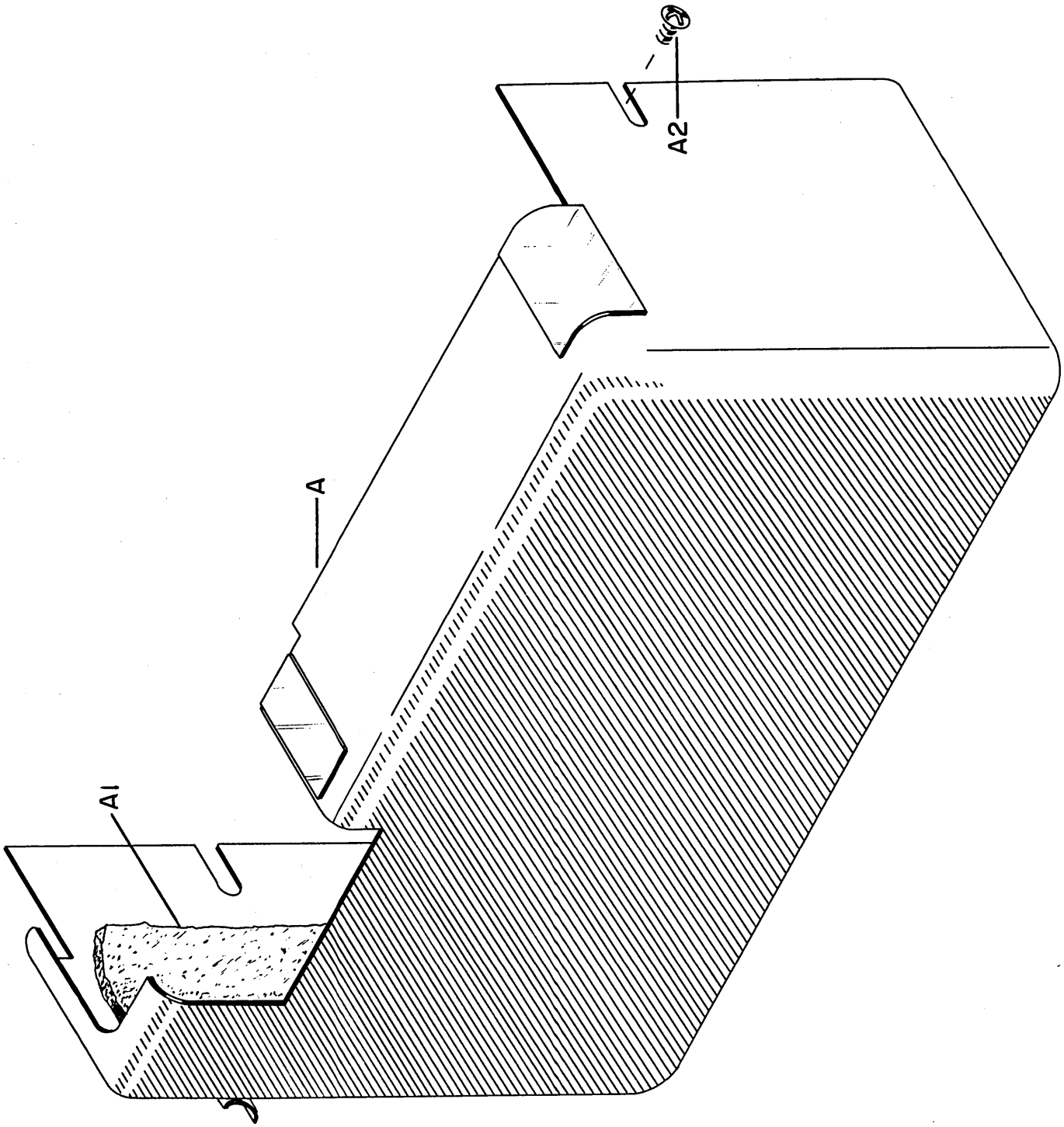

READER COVERS - LOWER - FIGURE 9

Covers

Ref. No.	Part No.	Part Name
A	1056779	Standard Tape Reader Lower Cover with Sound Deadener - Specify color
A	1056778	Cover only - Specify color
A	1053017	Cover Plate - Specify color
A	1053152	Double Reader Lower Cover with Sound Deadener - Specify color
A	1058279	Motorized Units and Selectadata with Sound Deadener - Lower Cover - Specify color
A	1058280	Cover only - Specify color
A	1040056	Edge Card with Sound Deadener - Lower Cover - Specify color
A	1040058	Cover only - Specify color
A	1049168	Motorized Edge Card Reader with Sound Deadener - Specify color
A	1049170	Cover only - Specify color
A	1049516	Tab Card Reader with Sound Deadener - Lower Cover - Specify color
A	1049518	Cover only - Specify color
A	1049641	Motorized Tab Card Reader with Sound Deadener - Lower Cover - Specify color
A	1049632	Cover only - Specify color
A	1054048	Translator Clutch Cover with Sound Deadener - Specify color
A	1054049	Cover only - Specify color
A1		Sound Deadeners for Covers
A1	1044978	Standard Reader
A1	1044967	Double Reader
A1	1044979	Edge Card Reader
A1	1049169	Motorized Units & Selectadata Reader
A1	1049169	Motorized Edge Card Reader
A1	1049517	Tab Card Reader
A1	1049643	Motorized Tab Card Reader
A1	1044978	Translator Clutch Cover
A2	1045547	Screw to mount all Covers

READER COVERS - UPPER - FIGURE 10

Covers

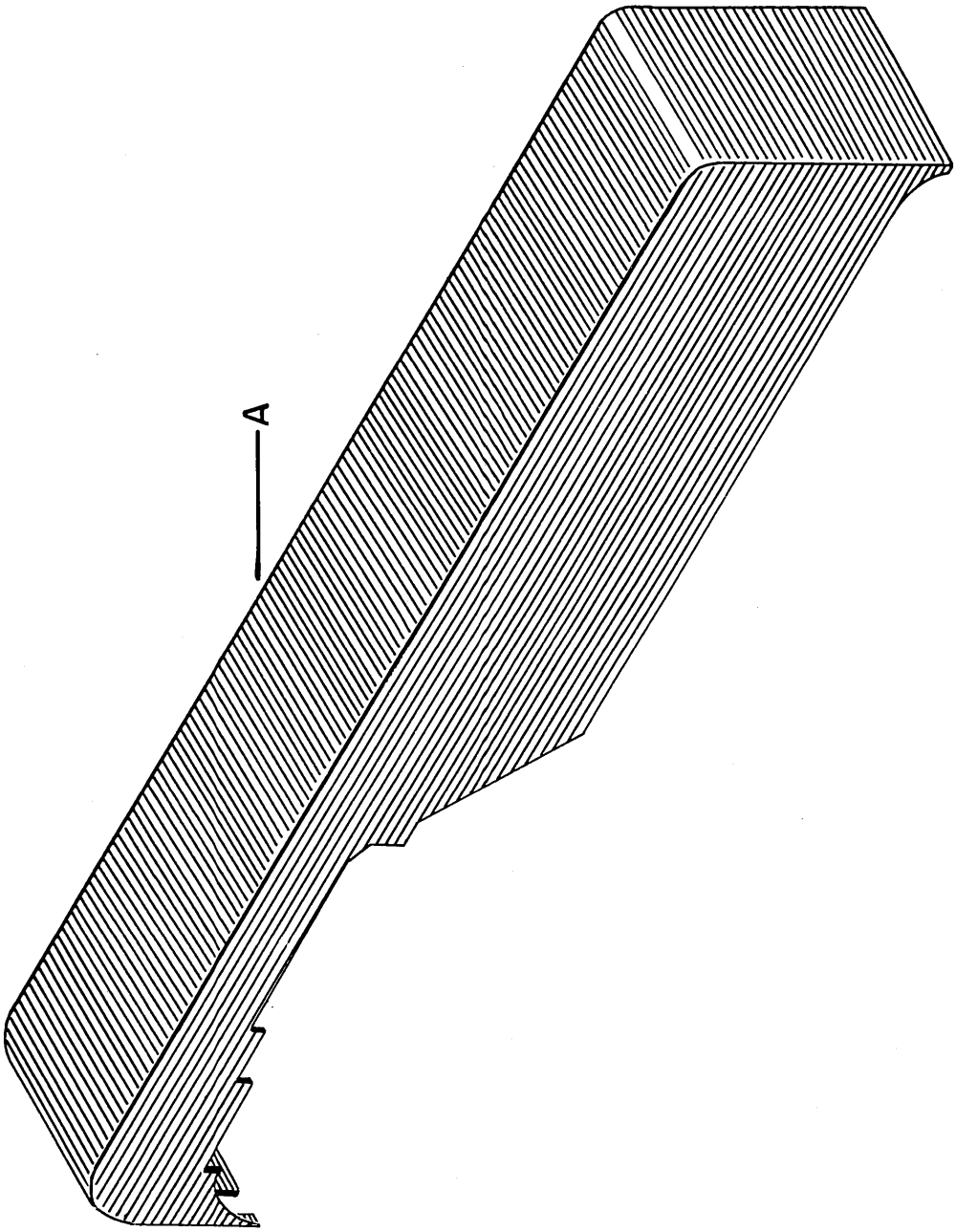

READER COVERS - UPPER - FIGURE 10

Covers

Ref. No.	Part No.	Part Name
A		Upper Covers for Reader
A	1055217	Standard Tape Reader - Specify color
A		Double Reader
A	1053151	Top Cover - Specify color
A	1055150	Top Plate - Specify color
A	1055145	Side Plate - Specify color
A	1058276	Motorized Units & Selectadata
A	1040055	Edge Card Reader
A	1040055	Motorized Edge Card Reader
A	1049515	Tab Card Reader
A	1049644	Motorized Tab Card Reader

TRANSLATOR COVER - FIGURE 11

Covers

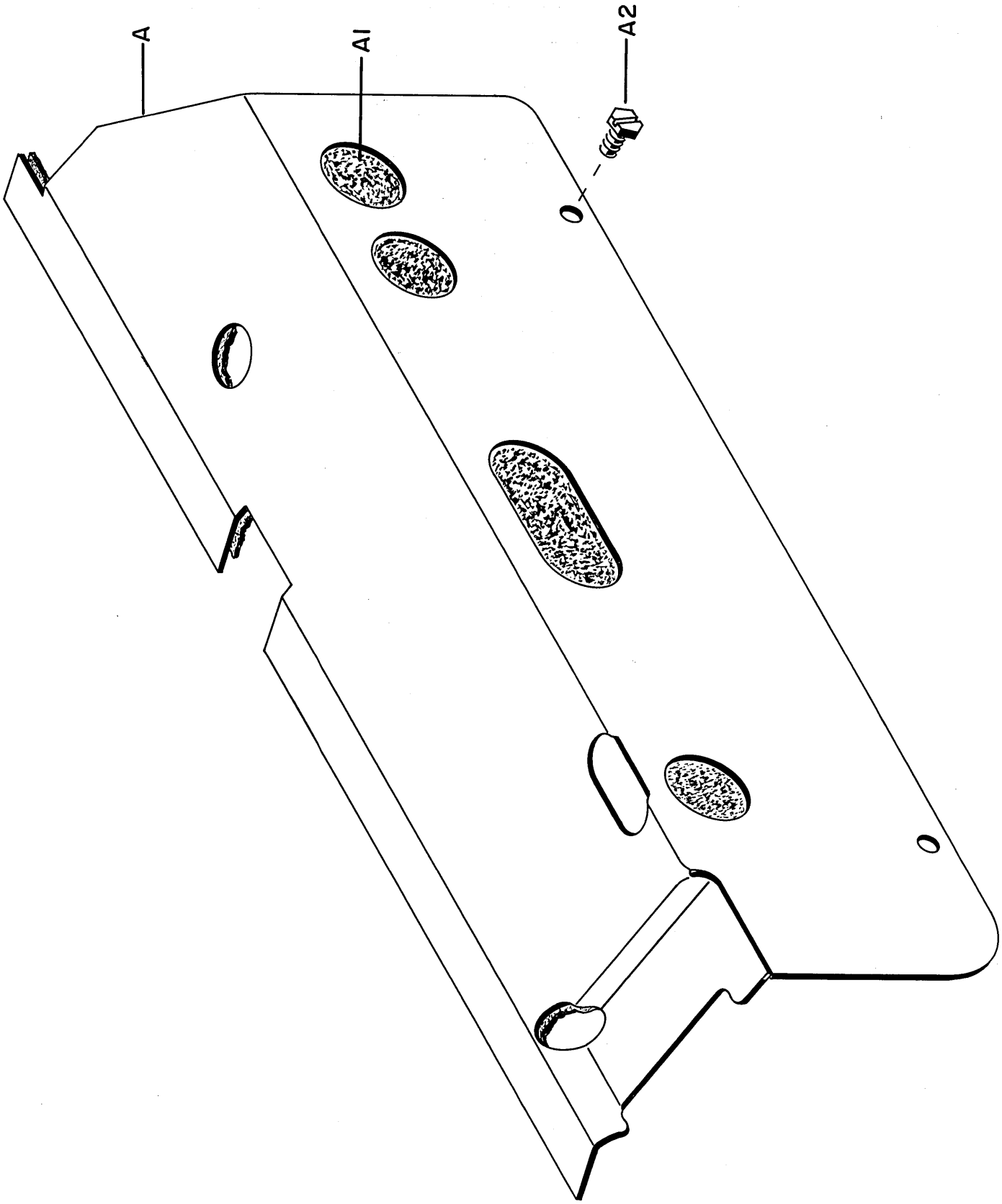

TRANSLATOR COVER - FIGURE 11

Covers

Ref. No.	Part No.	Part Name
A	1056259	Translator Cover & Sound Deadener
A	1020615	Translator Cover
A1	1044974	Sound Deadener
A2	1056811	Screw

CARRIAGE RETURN MAGNET COVER - FIGURE 12

Covers

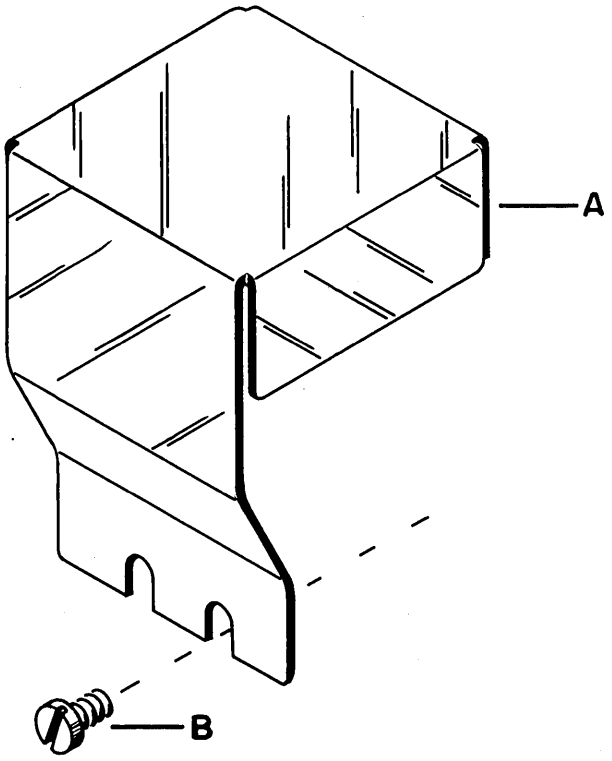

CARRIAGE RETURN MAGNET COVER - FIGURE 12

Covers

Ref. No.	Part No.	Part Name
A	1044704	Carriage Return Magnet Cover - Justowriter Recorder
B	1041999	Screw

BOTTOM PLATE - FIGURE 13

Covers

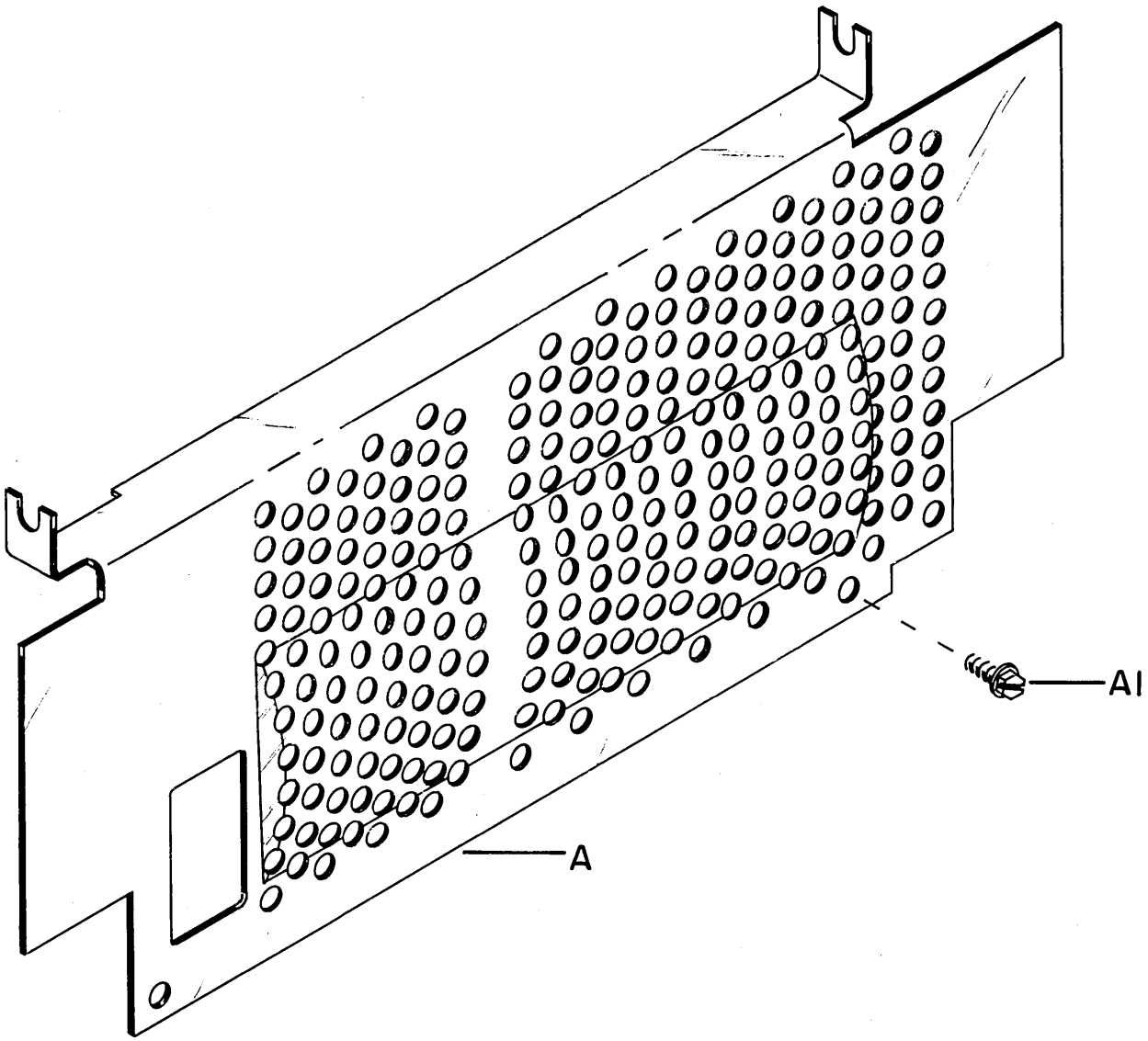

BOTTOM PLATE - FIGURE 13

Covers

Ref. No.	Part No.	Part Name
A	1055665	Bottom Plate
A1	1090652	Screw

SELECTIVE PUNCH & AUX. READER - FIGURE 14

Covers

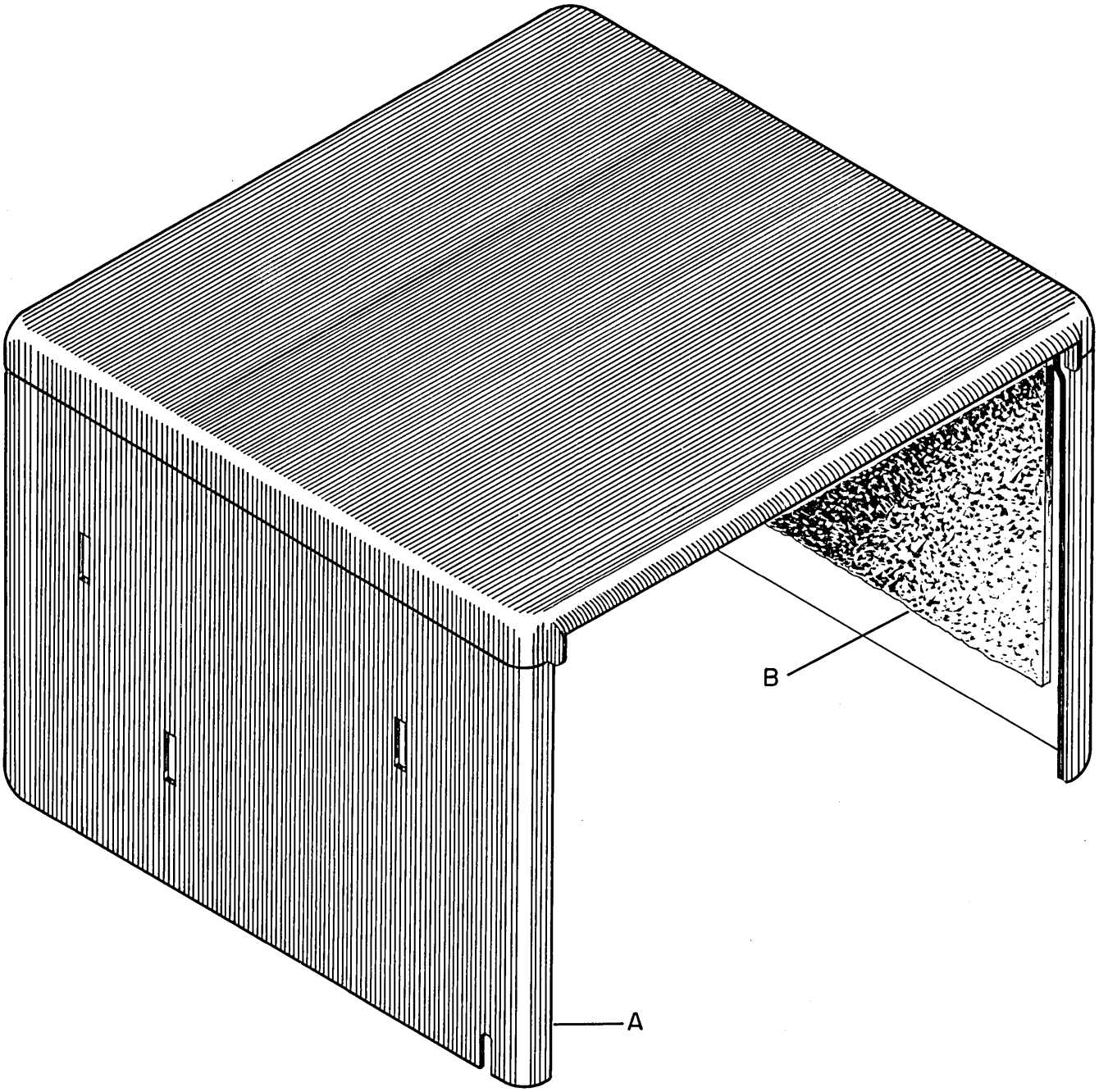

SELECTIVE PUNCH & AUX. READER - FIGURE 14

Covers

Ref. No.	Part No.	Part Name
A	1049131	Cover & Sound Deadener Assembly
A	1049089	Cover only
B	1049092	Sound Deadener - Top and Sides
B	1049093	Sound Deadener - Back
C	6319016	Name Strip - Auxiliary Reader - Brown (not shown)
C	6319016	Name Strip - Auxiliary Reader - Blue (not shown)
C	6319013	Name Strip - Auxiliary Punch - Brown (not shown)
C	6319014	Name Strip - Auxiliary Punch - Blue (not shown)
D	6319001	Friden Medallion - Brown (not shown)
D	6319002	Friden Medallion - Blue
D	1092253	Speed Nut to mount Medallion (not shown)

SELECTADATA READER COVER - FIGURE 15

Covers

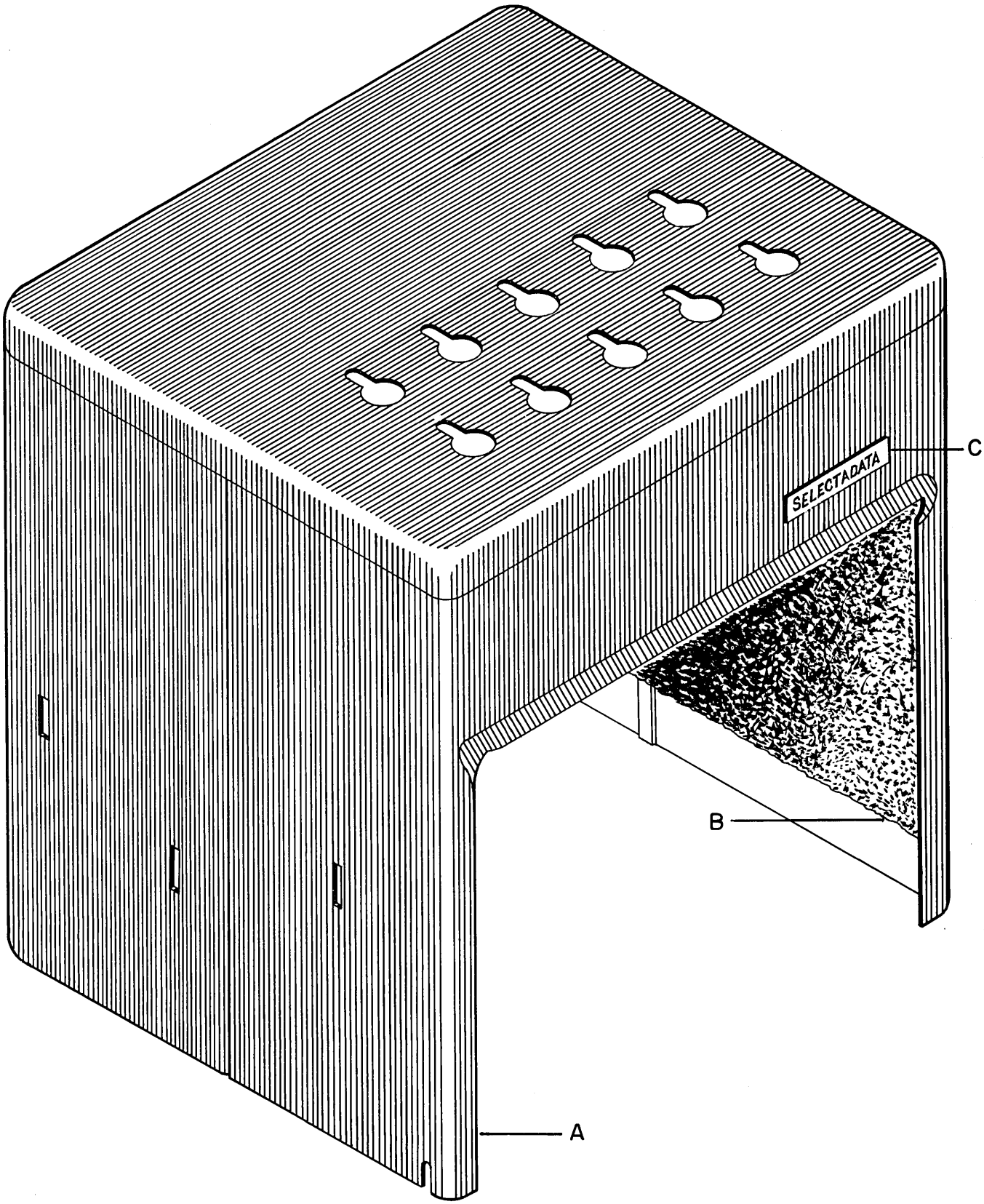

SELECTADATA READER COVER - FIGURE 15

Covers

Ref. No.	Part No.	Part Name
A	1049129	Cover & Sound Deadener Assembly for Selectadata with Manual Data Selector
A	1049094	Cover only
A1	1049354	New Cover & Sound Deadener Assembly for Selectadata - with Rotary Switches on anglar slant
A1	1049358	Cover only
B	1049098	Sound Deadener - Right Side
B	1049099	Sound Deadener - Left Side
B	1049100	Sound Deadener - Rear
B	1049101	Sound Deadener - Top
B1	1049355	Sound Deadener - Right Side for A1
B1	1049356	Sound Deadener - Left Side for A1
B1	1049357	Sound Deadener - Top & Rear for A1
C	6319011	Name Strip - Selectadata - Brown
D	6319001	Friden Medallion - Brown
D	1092253	Speed Nut to mount Medallion (not shown)

MOTORIZED PUNCH & READER COVERS - FIGURE 16

Covers

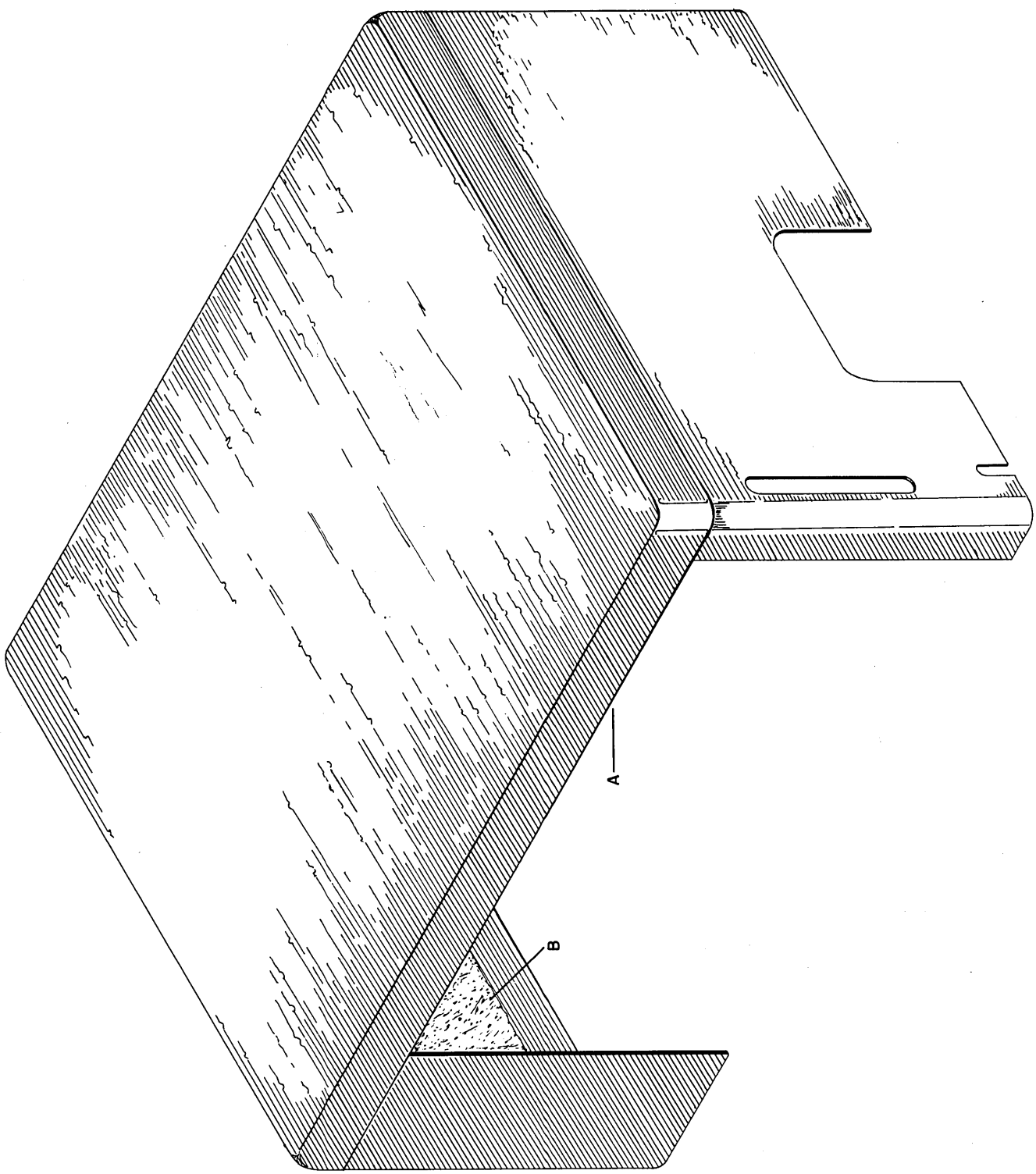

MOTORIZED PUNCH & READER COVERS - FIGURE 16

Covers

Ref. No.	Part No.	Part Name
A	1058748	Motorized Punch & Reader Cover with Sound Deadener - Specify color
A	1058749	Cover only - Specify color
A	1058757	Edge Card Reader Cover with Sound - Specify color
A	1058756	Cover only - Specify color
B	1044977	Sound Deadener for Punch & Reader Cover
B	1044977	Sound Deadener for Edge Card Reader

PARTS LIST

FRIDEN
FLEXOWRITER-JUSTOWRITER

INPUT UNITS

Figure 1-Motorized Reader-Base

Figure 2-Motorized Reader-Frame

Figure 3-Motorized Reader

Figure 4-Selectadata Reader-Base

Figure 5-Selectadata Reader-Frame

Figure 6-Selectadata Reader-Panel Switches & Relay Assembly

Figure 7-Selectadata Reader-Manual Data Selector

Figure 8-Selectadata Reader-Manual Data Selector

FRIDEN, INC.
HOME OFFICE: SAN LEANDRO, CALIFORNIA
SALES AND SERVICE THROUGHOUT WORLD

Printed in U. S. A.

MOTORIZED READER - BASE - FIGURE 1

Input Units

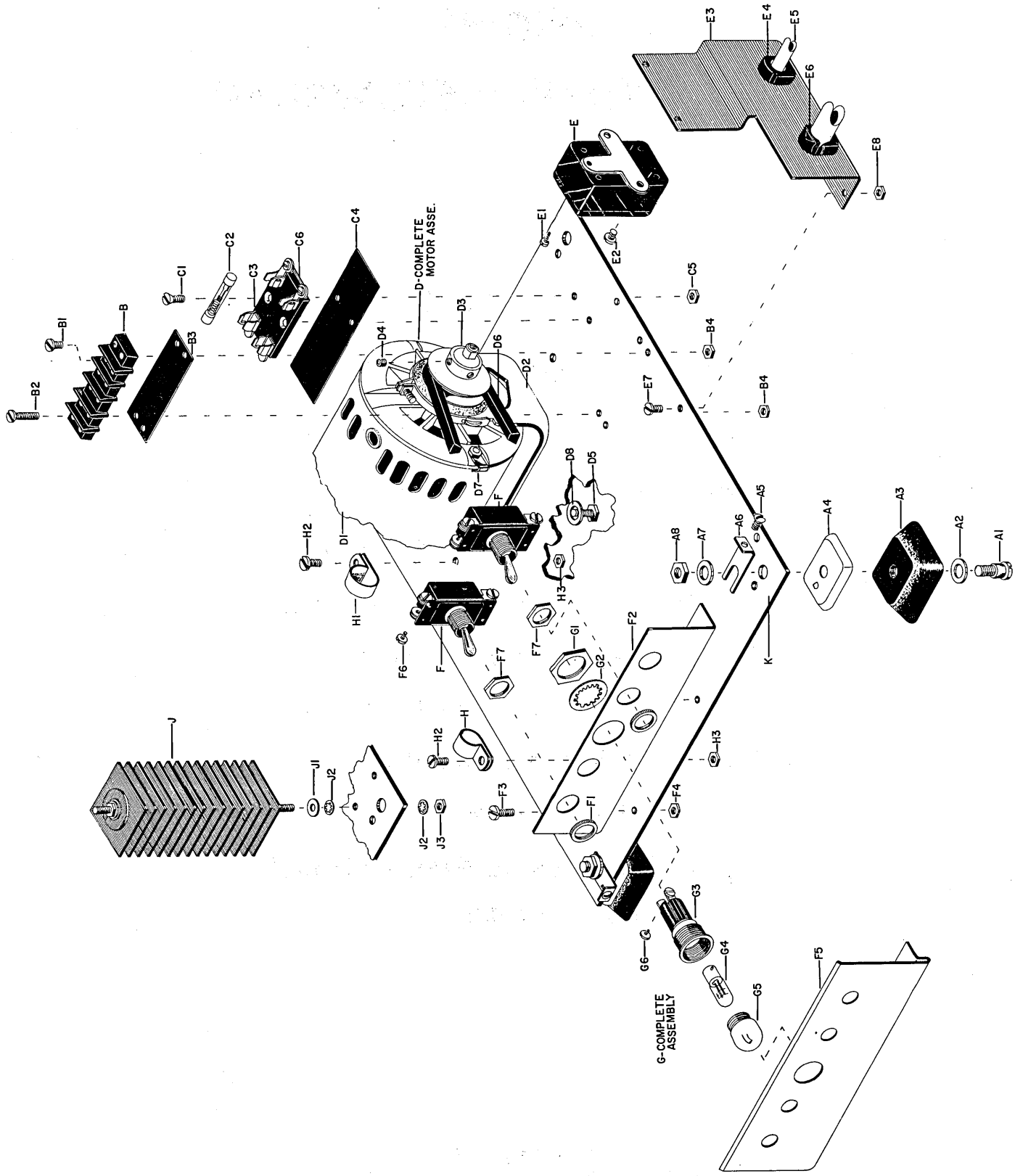

MOTORIZED READER - BASE - FIGURE 1

Input Units

Ref. No.	Part No.	Part Name
A1	1090369	Stud for A3
A2	1090384	Washer for A3
A3	1056639	Base Foot
A4	1000198	Base Foot Cap
A5	155180	Cover Mounting Screw
A6	1058559	Cover Mounting Bracket
A7	300174	Washer for A1
A8	3960	Nut for A1
B	1058558	Terminal Block
B1	140738	Terminal Screw
B2	1500	Screw to Mount B
B3	1058698	Terminal Block Insulation
B4	23815	Nut for B2
C1	1058716	Screw to Mount C3
C2	1054872	Fuse, 2 amp.
C2	1054744	Fuse, 1 amp.
C3	1053670	Fuse Block
C4	1055670	Fuse Marking Strip
C5	23815	Nut for C1
C6	1055874	Brass Jumper Strap
D	1058560	Motor & Cradle Assembly (includes D1, D2 & D7)
D1	1058561	Motor - 110 VAC 50/60 Cycle (includes Mounting Latches)
D2	1053697	Motor Cradle
D3	1058562	Motor Pulley - Standard See Chart Page 4 for Other Speeds
D4	121521	Set Screw for D3
D5	180894	Screw to Mount D2
D6	1058531	1200 RPM Drive Belt See Chart Page 4 for Other Speeds
D7	1053193	Cable Clamp
D8	300174	Washer for D5
E	1054753	Starting Relay
E1	1056803	Starting Relay Terminal Screw
E2	28760	Screw for Mounting E to E3
E3	1058765	Start Relay Bracket
E4	1042219	Strain Relief Clamp for E5
E5	1056154	Power Cord Assembly
E6	1058637	Strain Relief Clamp for Main Cable
E7	196698	Screw to mount E3 to K
E8	23815	Nut for E7

MOTORIZED READER - BASE - FIGURE 1

Input Units

Ref. No.	Part No.	Part Name
F	1058567	Switch (power)
F	1058567	Switch (reader)
F1	1040268	Locknut for F
F2	1045023	Switch Mounting Bracket - Light Hole in 3rd Position
	1058752	Switch Mounting Bracket - Light Hole in 4th Position
F3	196698	Screw to Mount F2 & F5
F4	23815	Nut for F3
F5		See Chart Page 5 for Engraved Plate
F6	1040266	Switch Terminal Screw
F7	1040268	Locknut for F
G	1044803	Lamp Assembly 90V. (includes C1 through C6)
G	1044804	Lamp Assembly 48V
G1	1040267	Locknut
G2	1040265	Star Washer
G3		Lamp Socket (not furnished as a separate part)
G4	1058587	Lamp - 90V
G4	1058691	Lamp - 48V
G5	1040277	Lens
G6	1040269	Terminal Screw
H	1054402	Cable Clamp
H1	1054462	Cable Clamp - Tube Type
H2	196698	Screw for H2 & H1
H3	23815	Nut for H2
J	1058570	Rectifier
J1	1058659	Spacer
J2	60646	Lock Washer
J3	23931	Nut
K	1058556	Base

PULLEY AND BELT CHART

Speed	Clutch Pulley	Motor Pulley	Belt
575 (50 Cyc.)	1045870	1058696	1058531
600 (50 Cyc.)	1044854	1058293	1058531
800 (50 Cyc.)	1044856	1058696	1058630
819 (50 Cyc.)	1044855	1058696	1058630
1000 (50 Cyc.)	1058538	1058562	1058531
1200 (50 Cyc.)	1044856	1058562	1058531
1228 (50 Cyc.)	1044855	1058562	1058531
1334 (50 Cyc.)	1058629	1058562	1058630
575 (60 Cyc.)	1058695	1058696	1058816
600	1058695	1058293	1058816
750	1044854	1058293	1058531
800	1058538	1058696	1058531
818	1058536	1058696	1058630
856	1045137	1058562	1053762
1000	1058534	1058562	1058530
1080	1044854	1058562	1058530
1200	1058538	1058562	1058531
1228	1058536	1058562	1058531
1334	1058538	1044878	1058531
1600	1058629	1058562	1058630
1334 (syn. Dup.)	1058538	1044878	1049287

MOTORIZED READER SWITCH PLATES

Part No.	Pos. 1	Pos. 2	Pos. 3	Pos. 4	Pos. 5
1058751	Start Read	Duplex Clear	On - Off Duplex	Light	On - Off Power
1058807			Light	On - Off Power	
1058808		On - Off Tape Feed	Light	On - Off Power	
1058809		On - Off Reader	Light	On - Off Power	
1058810		On - Off Tape Feed	Light	Tape Feed	On - Off Power
1058811		On - Off Tape Feed	Light	Reset	On - Off Power
1058812		Blank Plate			

Friden, Inc.

MOTORIZED READER - FRAME
FIGURE 2

Input Units

MOTORIZED READER - FRAME - FIGURE 2

Input Units

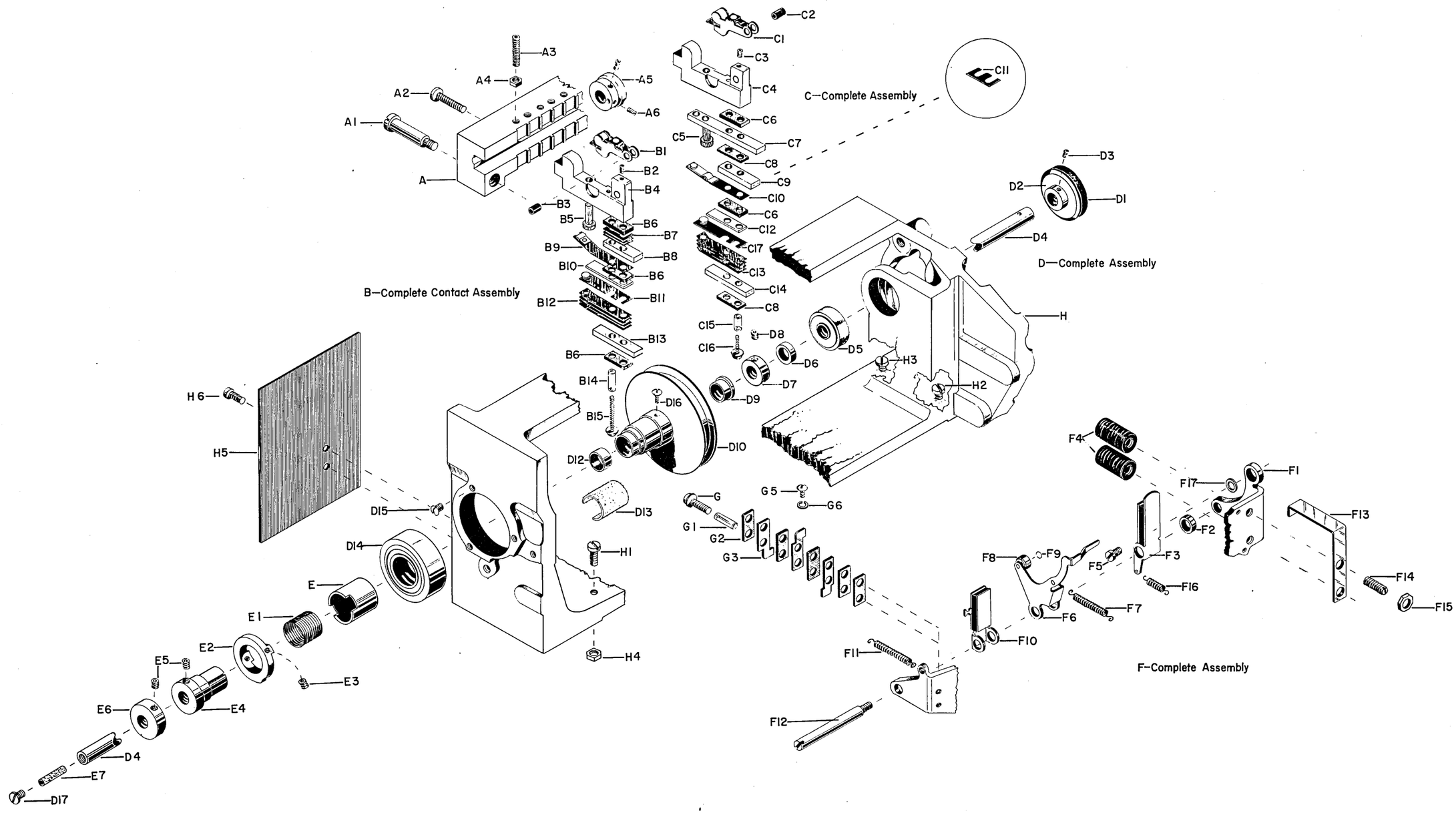

MOTORIZED READER - FRAME - FIGURE 2

Input Units

Ref. No.	Part No.	Part Name
A	1058525	Bracket to Mount Contacts
A1	1058554	Screw to Mount A
A2	1056850	Screw to Mount Contacts
A3	16076	Screw to Adjust Contacts
A4	7341	Nut for A3
A5		Cams to Operate Contacts - See Chart - Page 5
A6	75533	Set Screw for A5
B	1043832	Circuit Breaker Assembly - "A" Type
B1	228109	Arm Assembly
B2	165556	Set Screw for B3
B3	228475	Pivot
B4	1058551	Contact Mounting Block
B5	1058553	Plunger
B6	205743	Insulator Block
B7	205747	Shim .003 - As required to obtain Air Gap
B7	205783	Shim .0125 - As required to obtain Air Gap
B8	1043829	Contact Terminal Block
B9	205742	Contact Spring Assembly - Moveable
B10	228477	Contact Stiffener
B11	228107	Contact Spring Assembly
B12	1058552	Dampeners
B13	1043828	Contact Terminal Block
B14	100134	Screw Insulator
B15	173209	Screw
C	1043827	Circuit Breaker Assembly - "C" Type
C1	228109	Arm Assembly
C2	228475	Pivot
C3	165556	Set Screw for C2
C4	1058551	Contact Mounting Block
C5	1058622	Plunger
C6	228147	Insulator Block
C7	1058623	Contact Terminal Block
C8	205743	Insulator Block
C9	1043829	Contact Terminal Block
C10	1058625	Contact Spring Assembly
C11	205747	Shim .003 - As required to obtain Air Gap
C11	205783	Shim .0125 - As required to obtain Air Gap
C12	228477	Contact Stiffener
C13	1058552	Dampeners
C14	1043828	Contact Terminal Block
C15	133208	Screw Insulator
C16	173212	Screw
C17	228107	Contact Spring Assembly

MOTORIZED READER - FRAME - FIGURE 2

Input Units

Ref. No.	Part No.	Part Name
D	1058539	Drive Shaft Assembly (Includes D1, D2, D3 and D4)
D1	1058541	Coupling, Rubber
D2	1058219	Flange and Pin Assembly
D3	1058114	Spiral Pin
D4	1058540	Shaft
D5	1058543	Ball Bearing
D6	1058542	Spacer
D7	143009	Collar for D4
D8	22797	Set Screw for D7
D9	1058083	Flange Bearing
D10	1058537	Clutch Pulley & Hub Assembly 60 Cy. - 1200 RPM See Chart Page 4 - Figure 1 for Other Speeds
D12	1058084	Oilite Bearing
D13	1058635	Felt (To provide oil in Clutch Bearings)
D14	1058544	Ball Bearing
D15	155180	Screw Retaining for D5 & D14
D16	140738	Screw for Pulley
D17	1041999	Screw (Shaft Oiling Hole)
E	1058724	Clutch Sleeve
E1	1053308	Clutch Spring
E2	1058023	Knock off Cam and Overtravel Stop
E3	1058019	Set Screw for E2
E4	1058027	Clutch Collar
E5	121521	Set Screw for E4 and E6
E6	1058026	Clutch Detent
E7	1053999	Oil Wick
F	1058726	Clutch Yoke & Magnet Assembly 90V
F1	1058527	Magnet Yoke
F2	1058548	Spacer
F3	1058086	Armature Assembly
F4	1058528	Coil Assembly 90V
F5	1090000	Screw to Mount F
F6	1058097	Armature Knock Off
F7	130487	Spring for F6
F8	1056994	Ball Bearing Cam Follower
F9	304056	Spring Clip for F8
F10	1058089	Clutch Detent Latch Assembly
F11	26040	Spring for F10
F12	1058547	Armature Pivot Shaft
F13	1058722	Stop-Clutch Armature
F14	1058723	Core-Magnet

MOTORIZED READER - FRAME - FIGURE 2

Input Units

Ref. No.	Part No.	Part Name
F15	1091030	Locknut for F14
F16	1058620	Spring for F3
F17	1090058	Washer for F5
G	173203	Screw
G1	100227	Screw Insulator
G2	1020897	Insulator
G3	1041495	Terminal
G5	38794	Terminal Screw
G6	1057580	Lock Washer for G5
H	1048168	Frame
H1	2031	Screw to mount H to Base
H2	641	Screw to mount H to Base
H3	1058602	Screw to mount H to Base
H4	2899	Nut for H1, H2, and H3
H5	1058647	Shield
H6	38271	Screw for mounting H5 to H

CHART - CONTACT CAMS

Readings Shown In Degrees

Part No.	Dwell	Degrees Closed Class A Contact	Degrees Closed Class C Contact
1044341	37	5	
1044342	42	10	
1044343	52	20	15
1044344	57	25	20
1044345	62	30	25
1044346	67	35	30
1048178	72	40	35
1058677	82	50	45
1043757	87	55	50
1044347	92	60	55
1044348	97	65	60
1058678	102	70	65
1044349	107	75	70
1058679	112	80	75
1044350	122	90	85
1044351	127	95	90
1044352	132	100	95
1044353	141	109	104
1048177	147	115	110
1048176	152	120	115
1044354	157	125	120
1058546	162	130	125
1044355	167	135	130
1058545	177	145	140
1058682	187	155	150
1058683	190	158	153
1044356	197	165	160
1044357	202	170	165
1058684	212	180	175
1043758	217	185	180
1044358	222	190	185
1044359	237	205	200
1044360	247	215	210
1044361	253	221	216
1044362	258	226	221
1058685	262	230	225
1044369	277	245	240
1044363	282	250	245
1044364	287	255	250
1058686	292	260	255
1044365	302	270	265
1044366	307	275	270
1058687	317	285	280
1044367	338	306	301
1044368	357	325	320

Friden, Inc.

MOTORIZED READER
FIGURE 3

Input Units

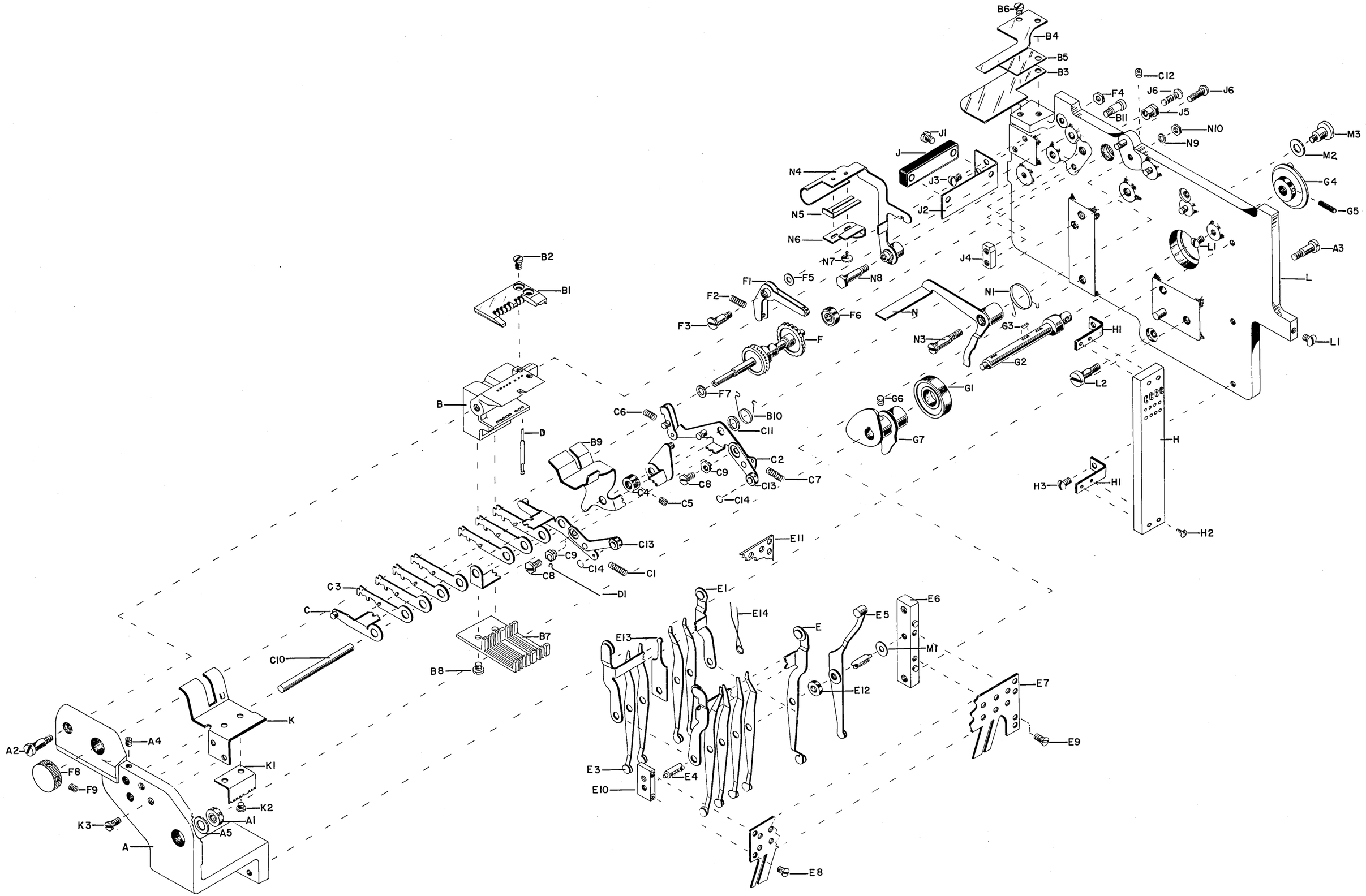
B6
B4
B5
B3
C12
J6
J6
F4
B11
J5
N10
N9
M3
M2
G4
G5
J1
J
J3
J2
N4
N5
N6
N7
N8
L1
A3
L
J4
B2
B1
F1
F5
F2
F3
F6
N
N1
G3
H1
L1
F
N3
G2
L2
G1
F7
G6
B
C6
B10
C11
G7
D
B9
C2
C9
C7
C8
C13
C4
C5
C14
H
H3
H1
H2
C13
E11
C9
C14
C1
C8
D1
C3
C
E1
E14
E5
E6
E13
E
M1
B7
C10
B8
E12
E7
K
A4
A2
K1
E9
F8
F9
E3
E4
E10
K2
K3
A1
A5
A
E8

MOTORIZED READER - FIGURE 3

Input Units

Ref. No.	Part No.	Part Name
A	1058266	Outer Casting
A	1049132	Outer Casting without Tape Feed Knob
A1	304013	Ball Bearing
A2	1053105	Screw (for mounting A)
A3	1058268	Screw (for mounting A)
A4	160942	Set Screw
A5	1045112	Shim for A & A1 - as needed
B	1053005	Guide Block
	1040051	Guide Block For Edge Card
B1	1053103	Tape Support
B2	1091042	Screw for mounting B1
B3	1058264	Tape Table
B4	1058241	Tape Guide
B5	1058265	Spacer
B6	4336	Screw for mounting B3, B4, B5
B7	1053019	Guide Comb
B8	1091042	Screw for mounting B7
B9	1058253	Tape Hold Arm
B10	1000153	Tape Hold Arm Spring
B11	1045611	Screw for mounting B
C	1049133	Interposer Bail Assembly (includes C8, C9, C13, C14)
C1	129637	Interposer Bail Spring
C2	1058233	Feed Lever Assembly (includes C8, C9, C13, C14)
C3	1053068	Interposer
C4	1091576	Interposer Shaft Collar
C5	165556	Set Screw for C4
C6	1058270	Feed Pawl Spring
C7	130487	Feed Lever Spring
C8	105827	Screw
C9	1040494	Eccentric Nut
C10	1058252	Interposer Shaft
C11	1058269	Washer for C10
C12	22797	Set Screw for C10
C13	1056994	Ball Bearing Cam Follower
C14	304056	Clip for C13
D	1053006	Reader Pin
D1	1091569	Spring, Interposer
E	1053031	Rear Contact Bail & Roller Assembly
E1	1053025	Front Contact Bail
E3	1053033	Contact Lever (for 1 & 8 Position)
E3	1053035	Contact Lever (for 2 & 7 Position)
E3	1053038	Contact Lever (for 3 Position)

MOTORIZED READER - FIGURE 3

Input Units

Ref. No.	Part No.	Part Name
E3	1053040	Contact Lever (for 4 Position)
E3	1053042	Contact Lever (for 5 Position)
E3	1053044	Contact Lever (for 6 Position)
E4	1053030	Contact Arm Pivot Shaft
E5	1053046	Tape Runout Contact Arm Hub and Studs Assembly
E6	1053099	Contact Bracket Tie, Inside
E7	1053024	Front Contact Bracket
E8	288	Screw to mount E7 to E10
E9	194	Screw to mount E7 to E6
E10	1053021	Contact Bracket Tie, Outside
E11	1053023	Rear Contact Bracket
E12	1058273	Spacer
E13	1053197	Contact Bail Stop
E14	1058299	Spring
F	1058047	Tape Feed Detent & Pin Wheel Assembly
F	1049138	Tape Feed Detent & Pin Wheel Assembly without Tape Feed Knob
F1	1058248	Detent Arm Assembly
F2	1058251	Spring (Detent)
F3	304041	Stud (Detent)
F4	7341	Nut for F3
F5	20038	Spacer for F3
F6	1057253	Ball Bearing
F7	45630	Shims for F
F8	1058106	Knob
F9	165556	Set Screw for F8
G	1058109	Power Shaft Assembly (includes G2, G4, G5)
G1	156231	Ball Bearing
G2	1058110	Shaft
G3	1020697	Key
G4	1058109	Coupling Flange & Pin Assembly
G5	1058114	Spirol Pin
G6	165356	Set Screw for G
G7	1058225	Cam
G7	1049139	Cam for Read without Tape Feed Knob
H	1044247	Terminal Block Assembly
H1	300279	Bracket
H2	1090559	Screw
H3	1091098	Screw
J	1058259	Tyniswitch
J1	3500	Screw for mounting J to J2
J2	1058221	Switch Mounting Bracket
J3	155180	Screw for mounting J 2 to L
J4	1058247	Feed Pawl Stop
J5	1058007	Eccentric Nut for F6
J6	1058290	Screw for mounting J4

MOTORIZED READER - FIGURE 3

Input Units

Ref. No.	Part No.	Part Name
K2	1058224	Tape Stripper
K1	1058223	Spring Bracket
K2	123540	Screw for mounting K1 to K
K3	1091468	Screw for mounting K to A
L	1058260	Inner Casting
L1	155180	Cover Mounting Screw
L2	1053122	Reader Mounting Screw
M1	45664	Spacer
M2	106368	Washer for M3
M3	44203	Mounting Screw for E6
N	302785	Tape Runout Arm Assembly
N1	1091568	Runout Arm Spring
N3	302830	Stud for N
N4	1058244	Lever and Hub Assembly (Tape Tension Arm)
N5	1058243	Outer Tape Guide
N6	1058242	Guide
N7	1058240	Screw to mount N5, N6 to N4
N8	1058222	Stud
N9	163899	Lock Washer for N3
N10	7341	Nut for N3

SELECTADATA READER - BASE - FIGURE 4

Input Units

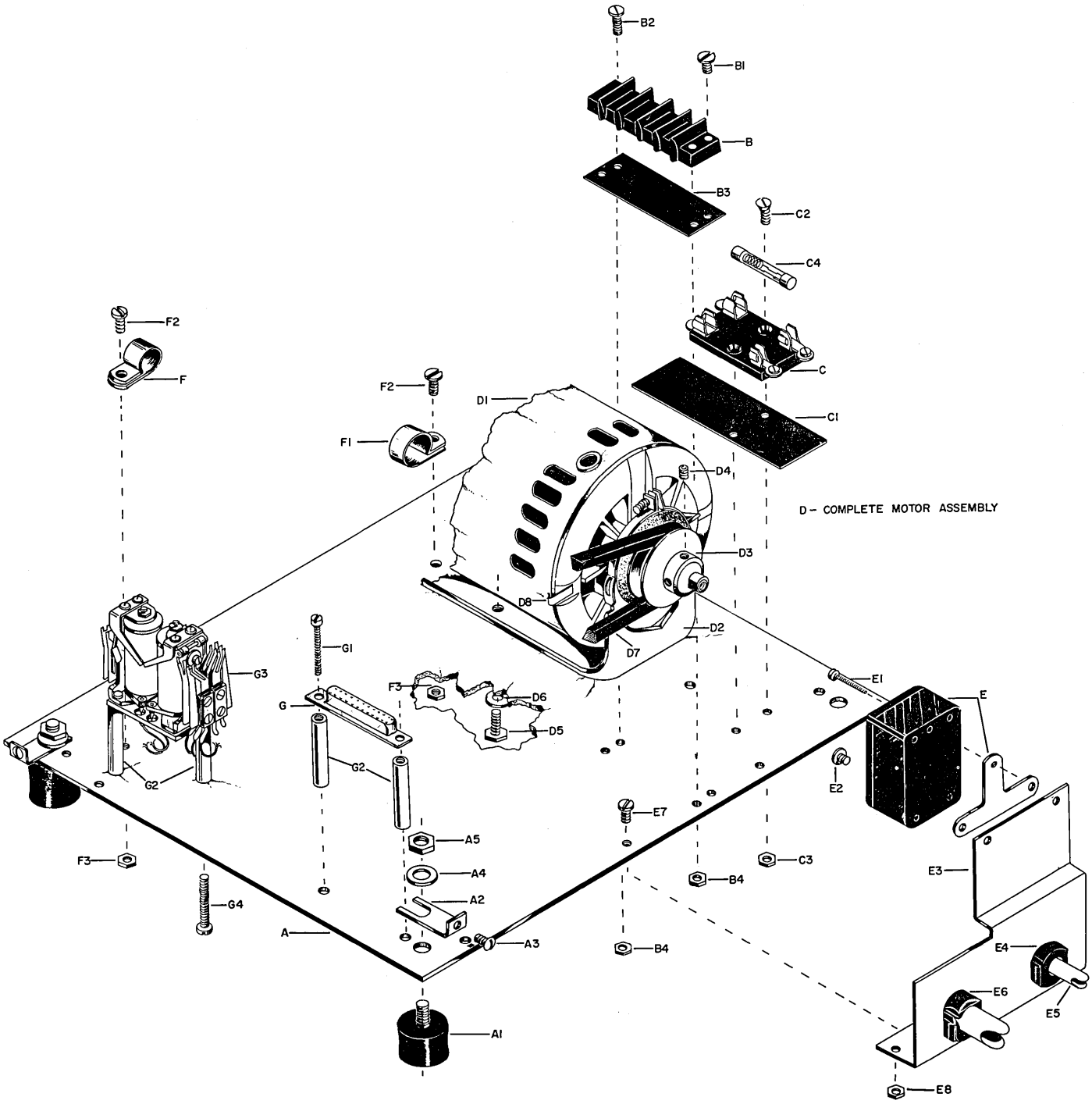

SELECTADATA READER - BASE - FIGURE 4

Input Units

Ref. No.	Part No.	Part Name
A	1058556	Base Plate
A1	1049247	Base Foot
A2	1058559	Cover Mounting Bracket
A3	155180	Cover Mounting Screw
A4	300174	Washer
A5	3960	Nut
B	1058558	Terminal Block
B1	140738	Terminal Screw
B2	1500	Screw to mount B
B3	1058698	Terminal Block insulation
B4	23815	Nut for B2
C	1053670	Fuse Block
C1	1055670	Fuse Marking Strip
C2	1058716	Screw for C
C3	23815	Nut for C2
C4	1054872	Fuse - 2 amp.
C4	1054744	Fuse - 1 amp.
D	1058560	Motor & Cradle Assembly (includes C1, C2 & D8)
D1	1058561	Motor - 110 Vac 50/60 cycle (includes Mounting Latches)
D2	1053697	Motor Cradle
D3	1044878	Motor Pulley - see Chart Page 4 Fig. 1
D4	121521	Set Crew for D3
D5	180894	Screw to mount D2
D6	300174	Washer for D5
D7	1058531	Drive Belt - see Chart Page 4 Fig. 1
D8	1053193	Cable Clamp
E	1054753	Starting Relay (includes Bracket)
E1	1056803	Starting Relay Terminal Screw
E2	28760	Screw for mounting E to E3
E3	1058765	Start Relay Bracket
E4	1042219	Strain Relief Clamp for E5
E5	1048656	Power Cord Assembly
E6	1058637	Strain Relief Clamp for Main Cable
E7	196698	Screw to mount E3 to A
E8	23815	Nut for E7
F	1054402	Cable Clamp
F1	1054462	Cable Clamp - Tube Type
F2	196698	Screw for H2 and H1
F3	23815	Nut for H2

SELECTADATA READER - BASE - FIGURE 4

Input Units

Ref. No.	Part No.	Part Name
G	6301077	Female - 25 pt. Cannon Connector
G1	1049268	Screw to mount 25 pt. Cannon Connector
G2	1058569	Spacer to mount Switch Relay and 25 pt. Cannon Connector
G3	1049256	Switch Relay
G4	1049063	Screw to mount Switch Relay

Friden, Inc.

SELECTADATA READER - FRAME
FIGURE 5

Input Units

SELECTADATA READER - FRAME - FIGURE 5

Input Units

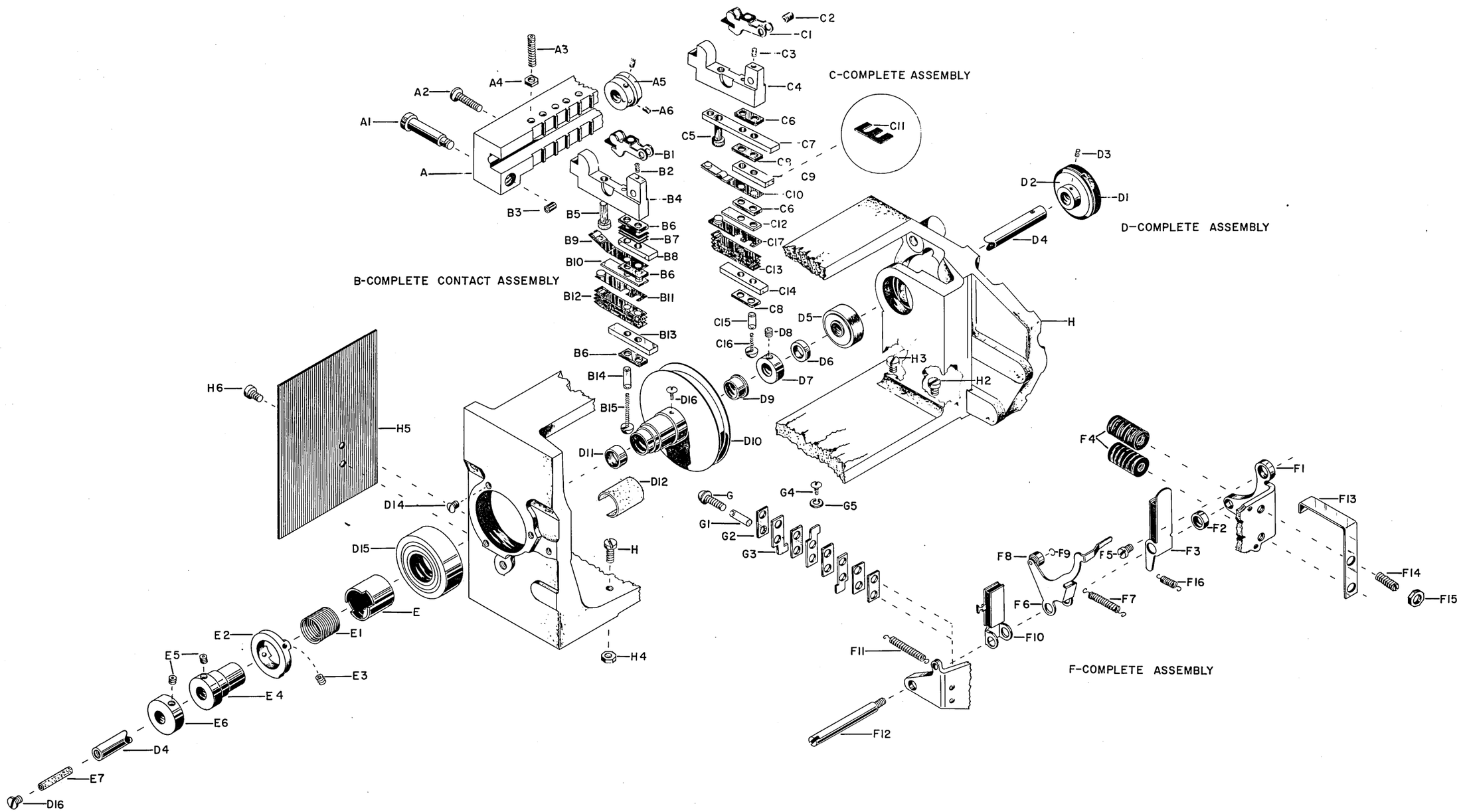

SELECTADATA READER - FRAME - FIGURE 5

Input Units

Ref. No.	Part No.	Part Name
A	1058525	Bracket to Mount Contacts
A1	1058554	Screw to Mount A
A2	1056850	Screw to Mount Contacts
A3	16076	Screw to Adjust Contacts
A4	7341	Nut for A3
A5		Cams to Operate Contacts - see Chart Page 5
A6	75533	Set Screw for A5
B	1043832	Circuit Breaker Assembly - "A" Type
B1	228109	Arm Assembly
B2	165556	Set Screw for B3
B3	228475	Pivot
B4	1058551	Contact Mounting Block
B5	1058553	Plunger
B6	205743	Insulator Block
B7	205747	Shim .003 - As required to Obtain Air Gap
B7	205783	Shim .0125 - As required to Obtain Air Gap
B8	1043829	Contact Terminal Block
B9	205742	Contact Spring Assembly - Moveable
B10	228477	Contact Stiffener
B11	228107	Contact Spring Assembly
B12	1058552	Dampeners
B13	1043828	Contact Terminal Block
B14	100134	Screw Insulator
B15	173209	Screw
C	1043827	Circuit Breaker Assembly - "C" Type
C1	228109	Arm Assembly
C2	228475	Pivot
C3	165556	Set Screw for C2
C4	1058551	Contact Mounting Block
C5	1058622	Plunger
C6	228147	Insulator Block
C7	1058623	Contact Terminal Block
C8	205743	Insulator Block
C9	1043829	Contact Terminal Block
C10	1058625	Contact Spring Assembly
C11	205747	Shim .003 - As required to Obtain Air Gap
C11	205783	Shim .0125 - As required to Obtain Air Gap
C12	228477	Contact Stiffener
C13	1058552	Dampeners
C14	1043828	Contact Terminal Block
C15	133208	Screw Insulator
C16	173212	Screw
C17	228107	Contact Spring Assembly

SELECTADATA READER - FRAME - FIGURE 5

Input Units

Ref. No.	Part No.	Part Name
D	1058539	Drive Shaft Assembly (includes D1, D2, D3 & D4)
D1	1058541	Coupling, Rubber
D2	1058219	Flange & Pin Assembly
D3	1058114	Spiral Pin
D4	1058540	Shaft
D5	1058543	Ball Bearing
D6	1058542	Spacer
D7	143009	Collar for D4
D8	22797	Set Screw for D7
D9	1058083	Flange Bearing
D10	1058538	Clutch Pulley & Hub Assembly 60 Cy. - 1200 RPM - see Chart Page 4 Fig. 1
D11	1058084	Oilite Bearing
D12	1058635	Felt (To Provide Oil in Clutch Bearings)
D13	140738	Screw for Pulley
D14	155180	Screw Retaining for D5 & D15
D15	1058544	Ball Bearing
D16	1041999	Screw (Shaft Oiling Hole)
E	1058724	Clutch Sleeve
E1	1053308	Clutch Spring
E2	1058023	Knock Off Cam & Overtravel Stop
E3	1058019	Set Screw for E2
E4	1058027	Clutch Collar
E5	121521	Set Screw for E4 & E6
E6	1058026	Clutch Detent
E7	1053999	Oil Wick
F	1058726	Clutch Yoke & Magnet Assembly 90V
F1	1058527	Magnet Yoke
F2	1058548	Spacer
F3	1058086	Armature Assembly
F4	1058528	Coil Assembly 90V
F5	1090000	Screw to Mount F
F6	1058097	Armature Knock Off
F7	130487	Spring for F6
F8	1056994	Ball Bearing Cam Follower
F9	304056	Spring Clip for F8
F10	1058089	Clutch Detent Latch Assembly
F11	26040	Spring for F10
F12	1058547	Armature Pivot Shaft
F13	1058722	Stop-Clutch Armature
F14	1058723	Core-Magnet
F15	1091030	Locknut for F14
F16	1058620	Spring for F3
F17	1090058	Washer for F5

SELECTADATA READER - FRAME - FIGURE 5

Input Units

Ref. No.	Part No.	Part Name
G	173203	Screw
G1	100227	Screw Insulator
G2	1020897	Insulator
G3	1041495	Terminal
G4	38794	Terminal Screw
G5	1057580	Lock Washer for G4
H	1048168	Frame
H1	2031	Screw to Mount H to Base
H2	641	Screw to Mount H to Base
H3	1058602	Screw to Mount H to Base
H4	2899	Nut for H1, H2 & H3
H5	1058647	Shield
H6	38271	Screw for Mounting H5 to H

CHART - CONTACT CAMS

Readings Shown In Degrees

Part No.	Dwell	Degrees Closed Class A Contact	Degrees Closed Class C Contact
1044341	37	5	
1044342	42	10	
1044343	52	20	15
1044344	57	25	20
1044345	62	30	25
1044346	67	35	30
1048178	72	40	35
1058677	82	50	45
1043757	87	55	50
1044347	92	60	55
1044348	97	65	60
1058678	102	70	65
1044349	107	75	70
1058679	112	80	75
1044350	122	90	85
1044351	127	95	90
1044352	132	100	95
1044353	141	109	104
1048177	147	115	110
1048176	152	120	115
1044354	157	125	120
1058546	162	130	125
1044355	167	135	130
1058545	177	145	140
1058682	187	155	150
1058683	190	158	153
1044356	197	165	160
1044357	202	170	165
1058684	212	180	175
1043758	217	185	180
1044358	222	190	185
1044359	237	205	200
1044360	247	215	210
1044361	253	221	216
1044362	258	226	221
1058685	262	230	225
1044369	277	245	240
1044363	282	250	245
1044364	287	255	250
1058686	292	260	255
1044365	302	270	265
1044366	307	275	270
1058687	317	285	280
1044367	338	306	301
1044368	357	325	320

Friden, Inc.

SELECTADATA READER
PANEL SWITCHES AND RELAY
ASSEMBLY - FIGURE 6

Input Units

SELECTADATA READER - PANEL SWITCHES AND RELAY ASSEMBLY - FIGURE 6

Input Units

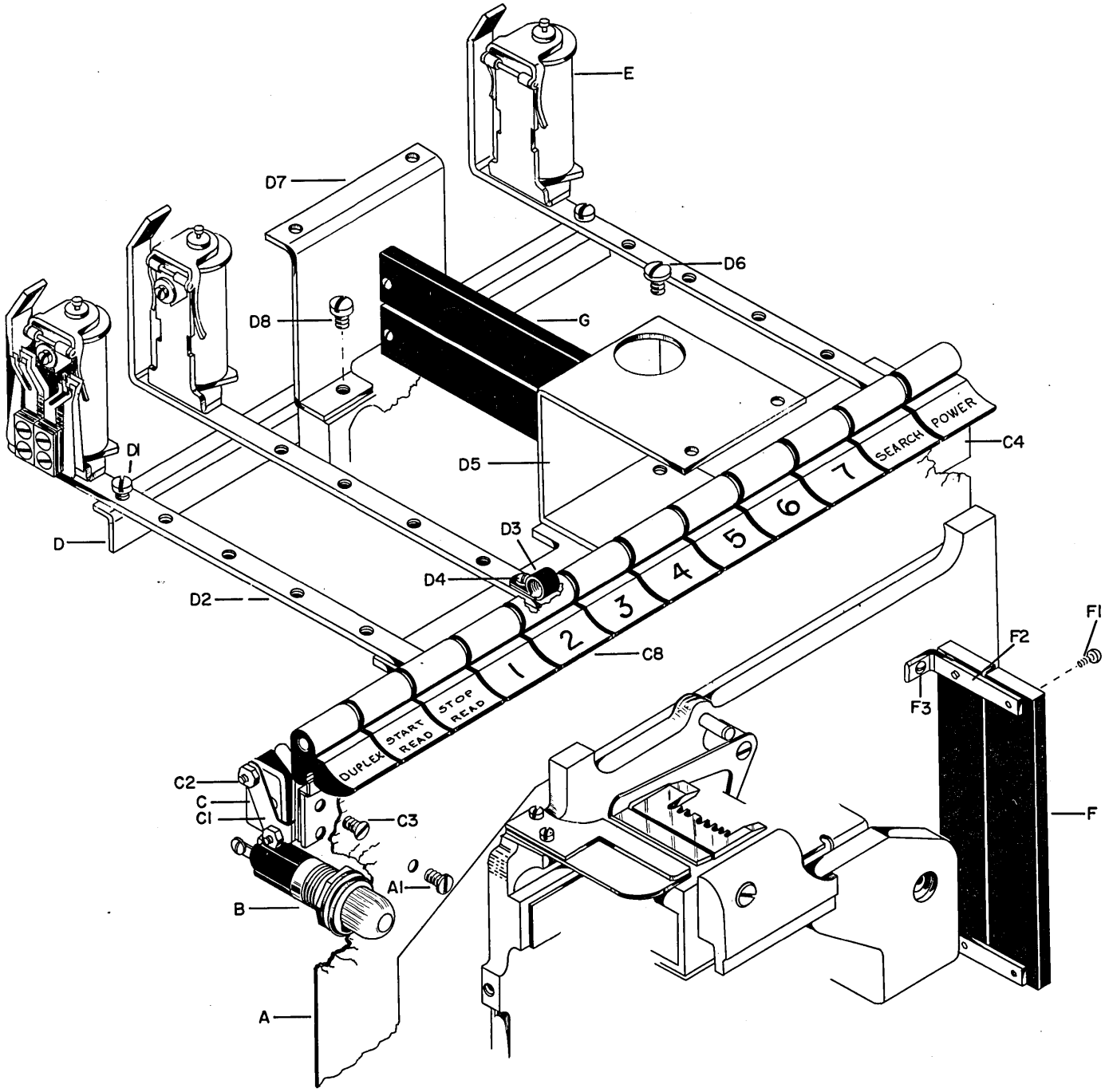

SELECTADATA READER-PANEL SWITCHES AND RELAY ASSEMBLY -FIGURE 6

Input Units

Ref. No.	Part No.	Part Name
A	1049061	Front Plate
A1	19698	Screw to Mount A
B	1044803	Lamp Assembly 90V
B1	1040277	Lens
	1040267	Lock Nut
	1040265	Star Washer
		Lamp Socket (not furnished as a separate part)
	1040269	Terminal Screw
C	1049056	Micro-Switch
C1	1049058	Actuator
	1049057	Actuator (locking)
C2	1049046	Screw to Mount Double Micro
	1668	Screw to Mount Micro-Switch
		Nut & Lockwasher for Micro-Switches (are part of 1049056 Assembly)
	1049045	Clamp - Micro-Switch (Not Shown)
	1049055	Adapter Bracket (Not Shown)
	1049054	Micro-Switch Mounting Bracket (Not Shown)
C3	186759	Screw to Mount (Clamp, Adapter Bracket, Micro-Switch Mt. Bracket to C6)
C4	1049044	Front Plate & Switch Bracket
	1049062	Bracket-Front Plate (Not Shown)
	186759	Screw to Mount Front Plate Bracket to C4 (Not Shown)
C5	1049248	Switch Button Pivot
C6	1049048	Switch Mounting Bracket
C7	196298	Screw to Mount C6 to C4 (Not Shown)
C8		Contact Buttons
	1049116	Search Button
	1049117	Power Button
	1049118	Duplex Button
	1049119	"1" Button
	1049120	"2" Button
	1049121	"3" Button
	1049122	"4" Button
	1049123	"5" Button
	1049124	"6" Button
	1049125	"7" Button
	1049269	"Synchro" On Button
	1049291	"Home" Button
	1053620	"Start" Read Button
	1053621	"Stop" Read Button
D	1049075	Relay Mounting Bracket
D1	3500	Screw
	13364	Relay Bar Spacer (Not Shown)
D2	1049068	Relay Mounting Bar
D3	1049251	Cable Clamp

SELECTADATA READER-PANEL SWITCHES AND RELAY ASSEMBLY -FIGURE 6

Input Units

Ref. No.	Part No.	Part Name
D4	196698	Screw to Mount D3
D5	1049027	Bracket to Mount Manual Data Selector
D6	186759	Screw to Mount D5
D7	1049028	Bracket to Mount Manual Data Selector
D8	337	Screw to Mount D7
E		See Relay Chart Electrical Section Fig. 3
F	1044247	Terminal Block
F1	1090559	Screw
F2	1049074	Terminal Block Mounting Bracket
F3	1091098	Screw
G		Same Assembly as F, F1, F2 and F3

Friden, Inc.

SELECTADATA READER
MANUAL DATA SELECTOR
ASSEMBLY - FIGURE 7

Input Units

SELECTADATA READER - MANUAL DATA SELECTOR ASSEMBLY - FIGURE 7

Input Units

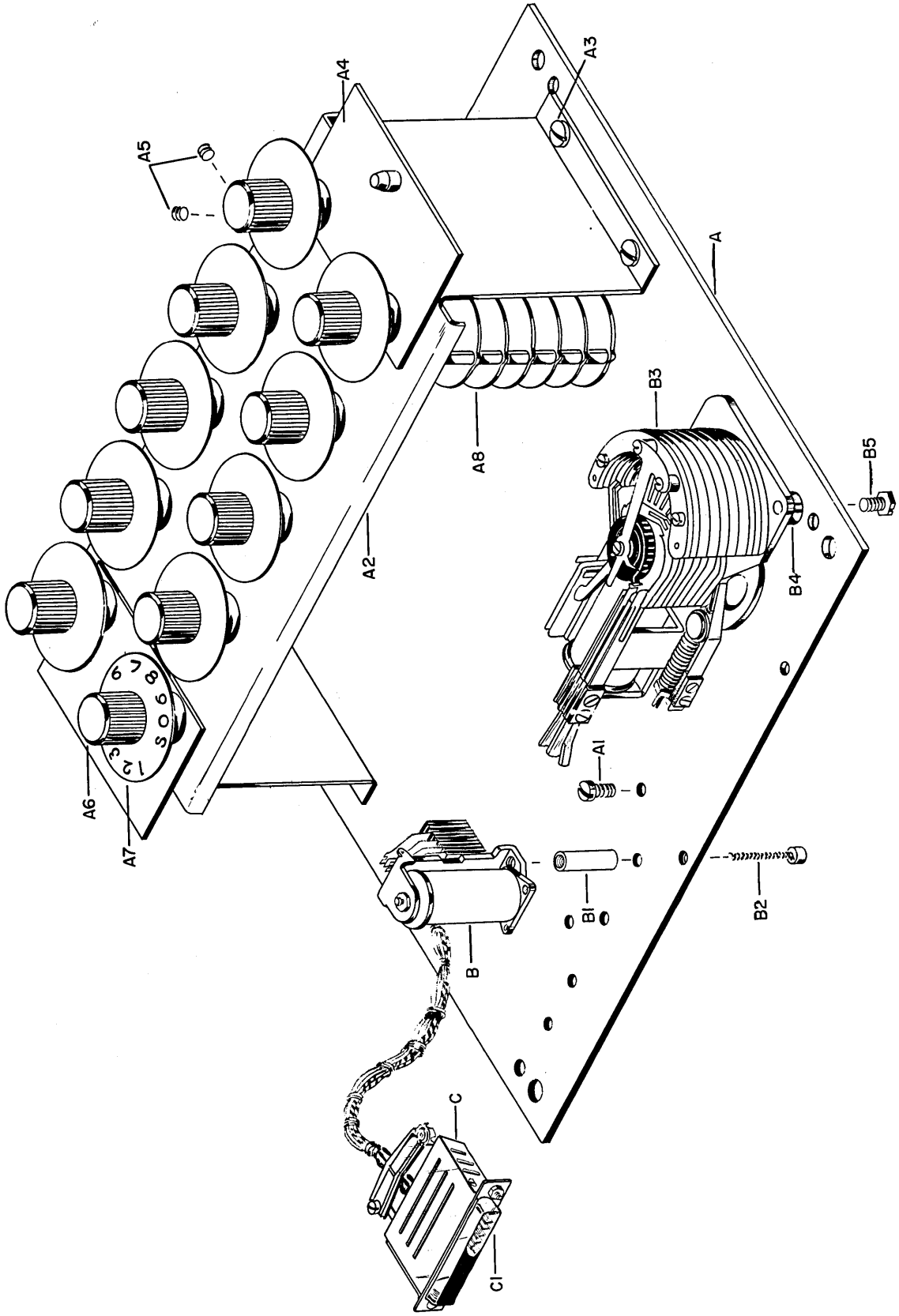

SELECTADATA READER-MANUAL DATA SELECTOR ASSEMBLY - FIGURE 7

Input Units

Ref. No.	Part No.	Part Name
A	1049036	Base (Manual Data Selector)
A1	2300	Screw
A2	1049037	Switch Bracket
A3	186759	Screw for A2
A4	1049240	Plate & Pin Assembly
A5	165556	Set Screw
A6	1049033	Knob
A7	1049031	Dial
	1049115	Screw to Mount A7 to A6 (Not Shown)
A8	1049034	Switch
B	1057538	Clare Type J Relay
B1	1049038	Spacer
B2	1049039	Screw
B3	1049035	Stepping Switch
B4	1045110	Spacer
B5	110775	Screw to Mount B3
C	1049109	Cover for 25 Point Cannon Connector
C1	1049108	Sub-Miniature Cannon Connector - Male

SELECTADATA READER - MANUAL DATA SELECTOR - FIGURE 8

Input Units

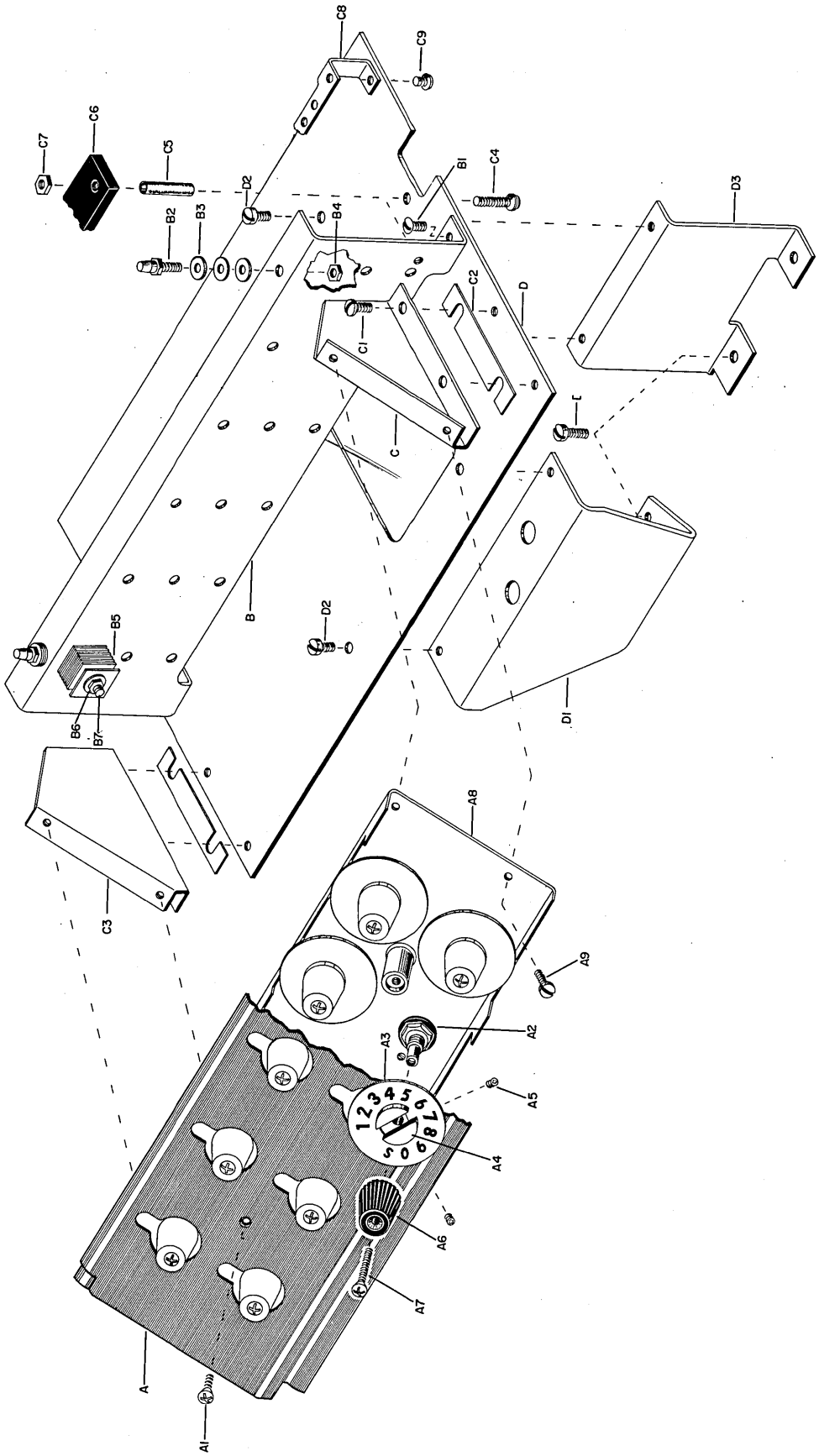

SELECTADATA READER-MANUAL DATA SELECTOR - FIGURE 8

Input Units

Ref. No.	Part No.	Part Name
A	1049338	Cover
A1	1049342	Screw to Mount Cover
A2	1049339	Rotary Switch (Single Level)
A3	1049344	Dial
A4	1049346	Dial Hub
A5	165556	Set Screw
A6	1049340	Knob
A7	1049341	Screw to Mount Knob
A8	1049335	Switch Mounting Bracket
A9	196299	Screw
B	1049350	Diode and Bracket Assembly (includes B through B7)
B	1049352	Bracket
B1	42003	Screw to Mount Bracket
B2	1049351	Cover Locating Pin
B3	45692	Washer
B4	1040498	Nut
B5	1049604	Rectifier
B6	1040498	Nut
B7	1058602	Screw
C	1049334	Switch Bracket Support - Right Hand
C1	34512	Screw
C2	1049347	Shim for Switch Bracket Support
C3	1049333	Switch Mounting Bracket - Left Hand
C4	1040338	Screw
C5	1049038	Spacer
C6	1044247	Terminal Board
C7	1048462	Nut
C8	1049370	Relay Mounting Bracket
C9	1040911	Screw
D	1049331	Base
D1	1049349	Bracket
D2	2300	Screw to Mount D1 and D3 to D
D3	1049348	Bracket
D4	337	Screw to Mount D1 and D3 to Frame

PARTS LIST

FRIDEN

FLEXOWRITER-JUSTOWRITER

OUTPUT UNITS

Figure 1-Motorized Punch — Base

Figure 2-Motorized Punch — Frame

Figure 3-Motorized Punch Drive

Figure 4-Auxiliary Punch — Base

Figure 5-Auxiliary Punch — Frame

Figure 6-Auxiliary Punch — Switches & Relays

FRIDEN, INC.
HOME OFFICE: SAN LEANDRO, CALIFORNIA
SALES AND SERVICE THROUGHOUT WORLD

Printed in U. S. A.

MOTORIZED PUNCH - BASE - FIGURE 1

Output Units

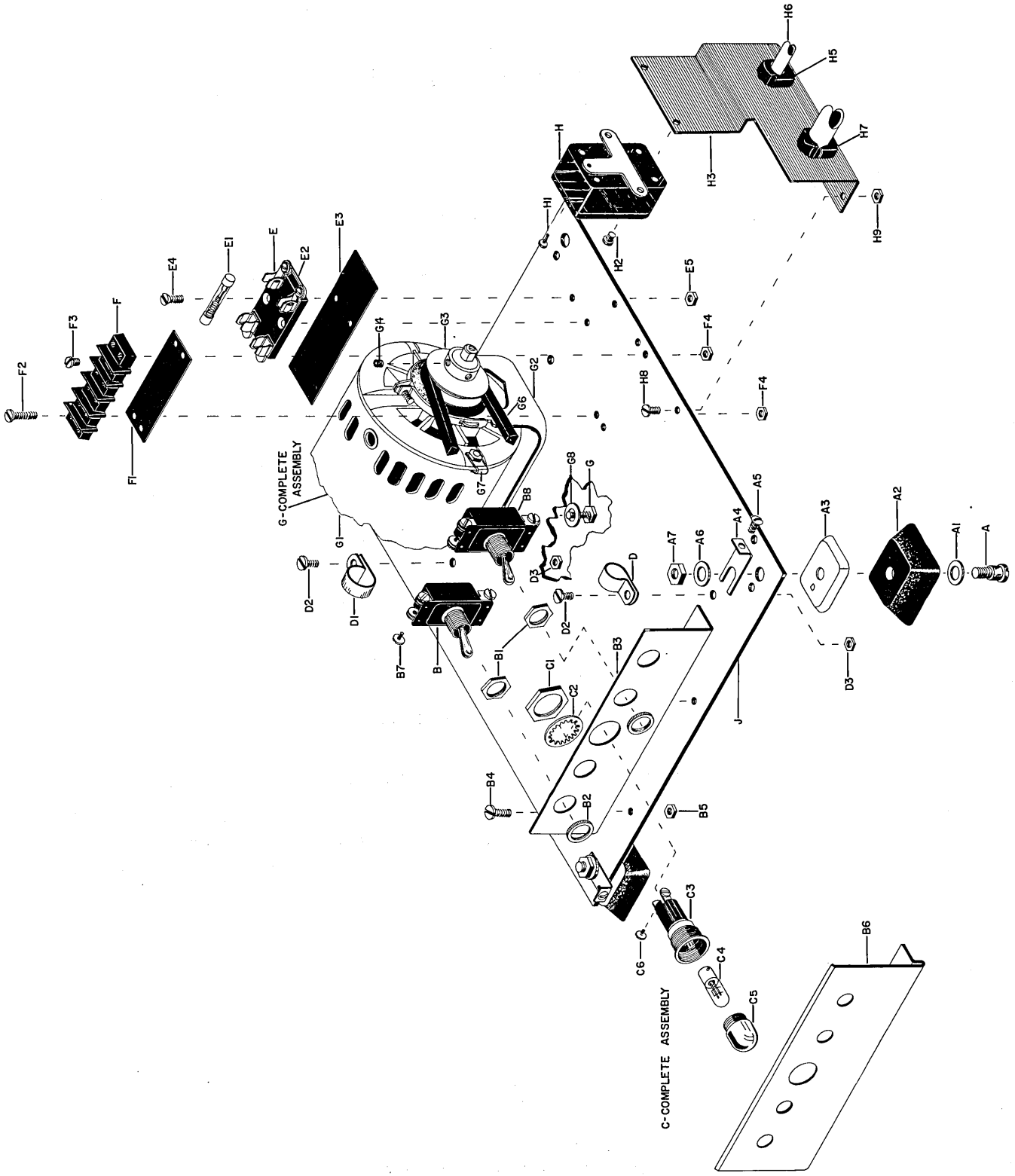

MOTORIZED PUNCH - BASE - FIGURE 1

Output Units

Ref. No.	Part No.	Part Name
A	1090369	Stud for A2
A1	1090384	Washer for A2
A2	1056639	Base Foot
A3	1000198	Base Foot Cap
A4	1058559	Cover Mounting Bracket
A5	155180	Cover Mounting Screw
A6	300174	Washer for A
A7	3960	Nut for A
B	1058566	Switch (Tape Feed)
B1	1040268	Lock Nut for B & B8
B2	1040268	Lock Nut
B3	1045023	Switch Mounting Bracket - Light hole in 3rd position
B3	1058752	Switch Mounting Bracket - Light hole in 4th position
B4	196398	Screw to mount B3 & B6 to J
B5	23815	Nut for B4
B6		Switch Plate - See Chart Page 4
B7	1040266	Switch Terminal Screw
B8	1058567	Switch (Power)
C	1044803	Lamp Assembly - 90V (including C1 thru C6)
C	1044804	Lamp Assembly - 48V
C1	1040267	Lock Nut
C2	1040265	Star Washer
C3		Lamp Socket (not furnished as separate part)
C4	1058587	Lamp - 90V
C4	1058691	Lamp - 48V
C5	1040277	Lens
C6	1050269	Terminal Screw
D	1054402	Cable Clamp
D1	1054462	Cable Clamp - Tube Type
D2	196698	Screw for D & D1
D3	23815	Nut for D2
E	1053670	Fuse Block
E1	1054872	Fuse 2 AMP
E2	1055874	Brass Jumper Strap
E3	1055670	Fuse Marking Strip
E4	1058716	Screw to mount E
E5	23815	Nut for E4
F	1058558	Terminal Block
F1	1058698	Insulation Terminal Block
F2	1500	Screw to Mount F
F3	140738	Terminal Screw
F4	23815	Nut for F2

MOTORIZED PUNCH - BASE - FIGURE 1

Output Units

Ref. No.	Part No.	Part Name
G	1058560	Motor and Cradle Assembly (includes G1, G2, & G7)
G1	1058561	Motor - 110 VAC 50/60 Cycle (includes Mounting Latches)
G2	1053697	Motor Cradle
G3	1058562	Motor Pulley - See Chart Page 5
G4	121521	Set Screw for G3
G5	180894	Screw to Mount G2
G6		Drive Belt See Chart Page 5
G7	1053193	Cable Clamp
G8	300174	Washer for G5
H	1054753	Starting Relay
H1	1056803	Starting Relay Terminal Screw
H2	28760	Screw for Mounting H to H3
H3	1058765	Starting Relay Bracket
H5	1042219	Strain Relief Clamp for H6
H6	1056154	Power Cord Assembly
H7	1058637	Strain Relief Clamp for Main Cable
H8	196398	Screw to Mount H3 to J
H9	23815	Nut for H8
J	1058556	Base

MOTORIZED PUNCH SWITCH PLATES

Part No.	Pos. 1	Pos. 2	Pos. 3	Pos. 4	Pos. 5
1058751	Start Read	Duplex Clear	On - Off Duplex	Light	On - Off Power
1058807			Light	On - Off Power	
1058808		On - Off Tape Feed	Light	On - Off Power	
1058809		On - Off Reader	Light	On - Off Power	
1058810		On - Off Tape Feed	Light	Tape Feed	On - Off Power
1058811		On - Off Tape Feed	Light	Reset	On - Off Power
1058812		Blank	Plate		

PULLEY & BELT CHART

Speed	Clutch Pulley	Motor Pulley	Belt
575 (50 Cyc.)	1045870	1058696	1058531
600 (50 Cyc.)	1044854	1058293	1058531
800 (50 Cyc.)	1044856	1058696	1058630
819 (50 Cyc.)	1044855	1058696	1058630
1000 (50 Cyc.)	1058538	1058562	1058531
1200 (50 Cyc.)	1044856	1058562	1058531
1228 (50 Cyc.)	1044855	1058562	1058531
1334 (50 Cyc.)	1058629	1058562	1058630
575 (60 Cyc.)	1058695	1058696	1058816
600	1058695	1058293	1058816
750	1044854	1058293	1058531
800	1058538	1058696	1058531
818	1058536	1058696	1058630
856	1045137	1058562	1053762
1000	1058534	1058562	1058530
1080	1044854	1058562	1058530
1200	1058538	1058562	1058531
1228	1058536	1058562	1058531
1334	1058538	1044878	1058531
1600	1058629	1058562	1058630
1334 (syn. Dup.)	1058538	1044878	1049287

Friden, Inc.

MOTORIZED PUNCH - FRAME
FIGURE 2

Output Units

MOTORIZED PUNCH - FRAME FIGURE 2

Output Units

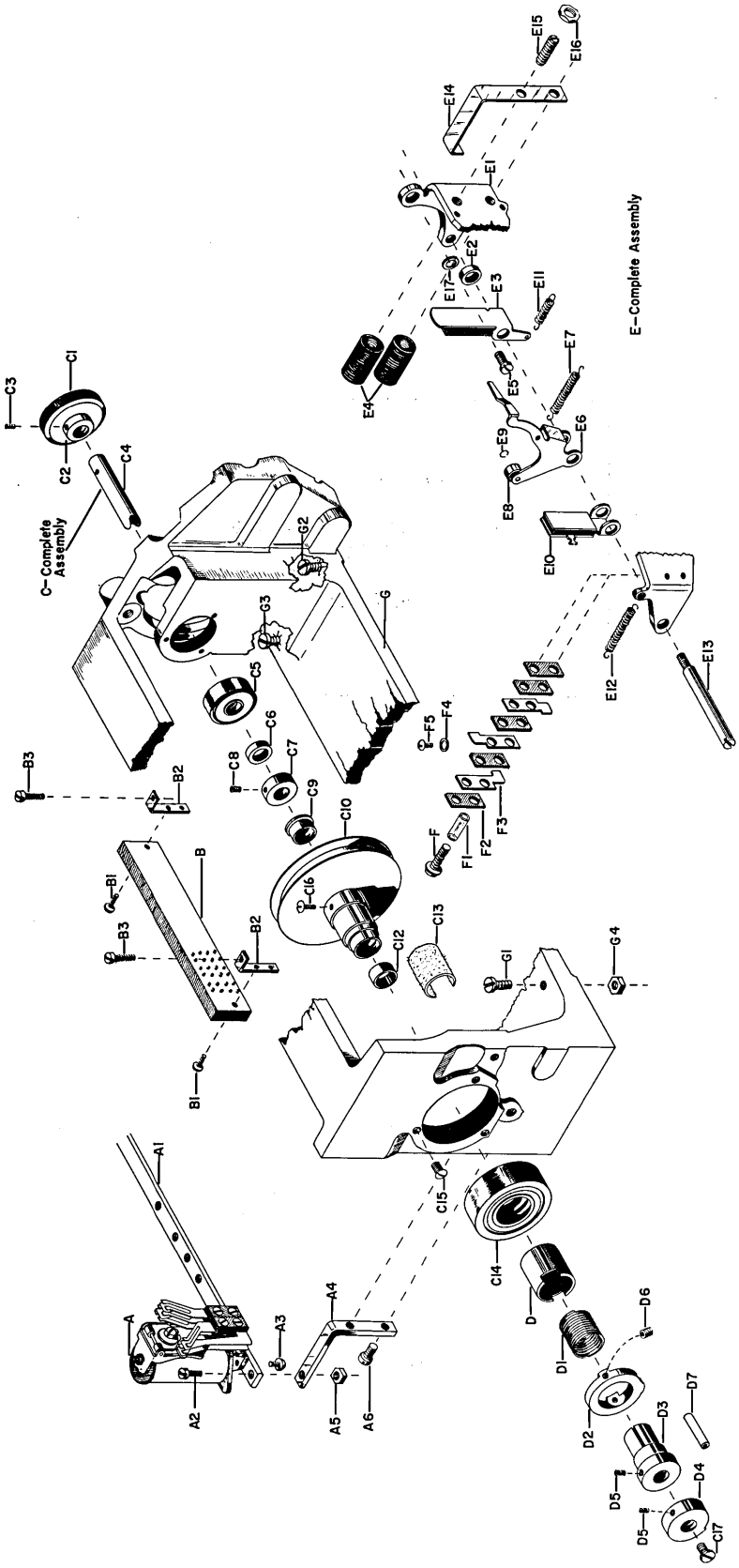

MOTORIZED PUNCH - FRAME - FIGURE 2

Output Units

Ref. No.	Part No.	Part Name
A		Relays - See Chart (Figure 3) Electrical Section
A1	1058645	Relay Mounting Bar
A2	2629	Screw for A1 & A4
A3	1058648	Screw to Mount Relay
A4	1058644	Bracket for A1
A5	7341	Nut for A2
A6	3500	Screw for A4 & G
B	1044247	Terminal Block Assembly
B1	109559	Screw to Mount B & B2
B2	1058649	Bracket
C	1058539	Drive Shaft Assembly (includes C1, C2, C3, and C4)
C1	1058541	Coupling - Rubber
C2	1058219	Flange and Pin Assembly
C3	1058114	Spirol Pin
C4	1058540	Shaft
C5	1058543	Ball Bearing
C6	1058542	Spacer
C7	143009	Collar for C4
C8	22797	Set Screw for C7
C9	1058083	Flange Bearing
C10		See Chart Page 5 Fig 1
C12	1058084	Oilite Bearing
C13	1058635	Felt (To provide oil in Clutch Bearings)
C14	1058544	Ball Bearing
C15	155180	Screw Retaining for C5 & C14
C16	140738	Screw for Pulley
C17	1041999	Screw (Shaft Oiling Hole)
D	1058724	Clutch Sleeve
D1	1053308	Clutch Spring
D2	1058023	Knock Off Cam and Overtravel Stop
D3	1058027	Clutch Collar
D4	1058026	Clutch Detent
D5	121521	Set Screw for D3 & D4
D6	1058019	Set Screw for D2
D7	1053999	Wick (oil)
E	1058726	Clutch Yoke & Magnet Assembly 90V
E	1058727	Clutch Yoke & Magnet Assembly 48V
E1	1058527	Magnet Yoke
E2	1058548	Spacer
E3	1058086	Armature Assembly

MOTORIZED PUNCH - FRAME - FIGURE 2

Output Units

Ref. No.	Part No.	Part Name
E4	1058528	Coil Assembly 90V
E4	1058632	Coil Assembly 48V
E5	1090000	Screw to Mount E
E6	1058097	Armature Knock-Off
E7	130487	Spring for E6
E8	1056994	Ball Bearing Cam Follower
E9	304056	Spring Clip for E8
E10	1058089	Clutch Detent Latch Assembly
E11	1058620	Spring for E3
E12	26040	Spring for E10
E13	1058547	Armature Pivot Shaft
E14	1058722	Stop - Clutch Armature
E15	1058723	Core
E16	1091030	Lock Nut for E15
E17	1090058	Washer for E5
F	173203	Screw
F1	100227	Screw Insulator
F2	1020897	Insulator
F3	1041495	Terminal
F4	1057580	Lock Washer for F5
F5	38794	Terminal Screw
G	1048168	Frame
G1	2031	Screw to Mount G to Base
G2	641	Screw to Mount G to Base
G3	1058620	Screw to Mount G to Base
G4	2899	Nut for G1, G2, & G3

CHART - CONTACT CAMS

Part No.	Dwell	Degrees Closed Class A Contact	Degrees Closed Class C Contact
1044341	37°	5°	
1044342	42	10	
1044343	52	20	15°
1044344	57	25	20
1044345	62	30	25
1044346	67	35	30
1048178	72	40	35
1058677	82	50	45
1043757	87	55	50
1044347	92	60	55
1044348	97	65	60
1058678	102	70	65
1044349	107	75	70
1058679	112	80	75
1044350	122	90	85
1044351	127	95	90
1044352	132	100	95
1044353	141	109	104
1048177	147	115	110
1048176	152	120	115
1044354	157	125	120
1058546	162	130	125
1044355	167	135	130
1058545	177	145	140
1058682	187	155	150
1058683	190	158	153
1044356	197	165	160
1044357	202	170	165
1058684	212	180	175
1043758	217	185	180
1044358	222	190	185
1044359	237	205	200
1044360	247	215	210
1044361	253	221	216
1044362	258	226	21
1058685	262	230	225
1044369	277	245	240
1044363	282	250	245
1044364	287	255	250
1058686	292	260	255
1044365	302	270	265
1044366	307	275	270
1058687	317	285	280
1044367	338	306	301
1044368	357	325	320

MOTORIZED PUNCH DRIVE - FIGURE 3

Output Units

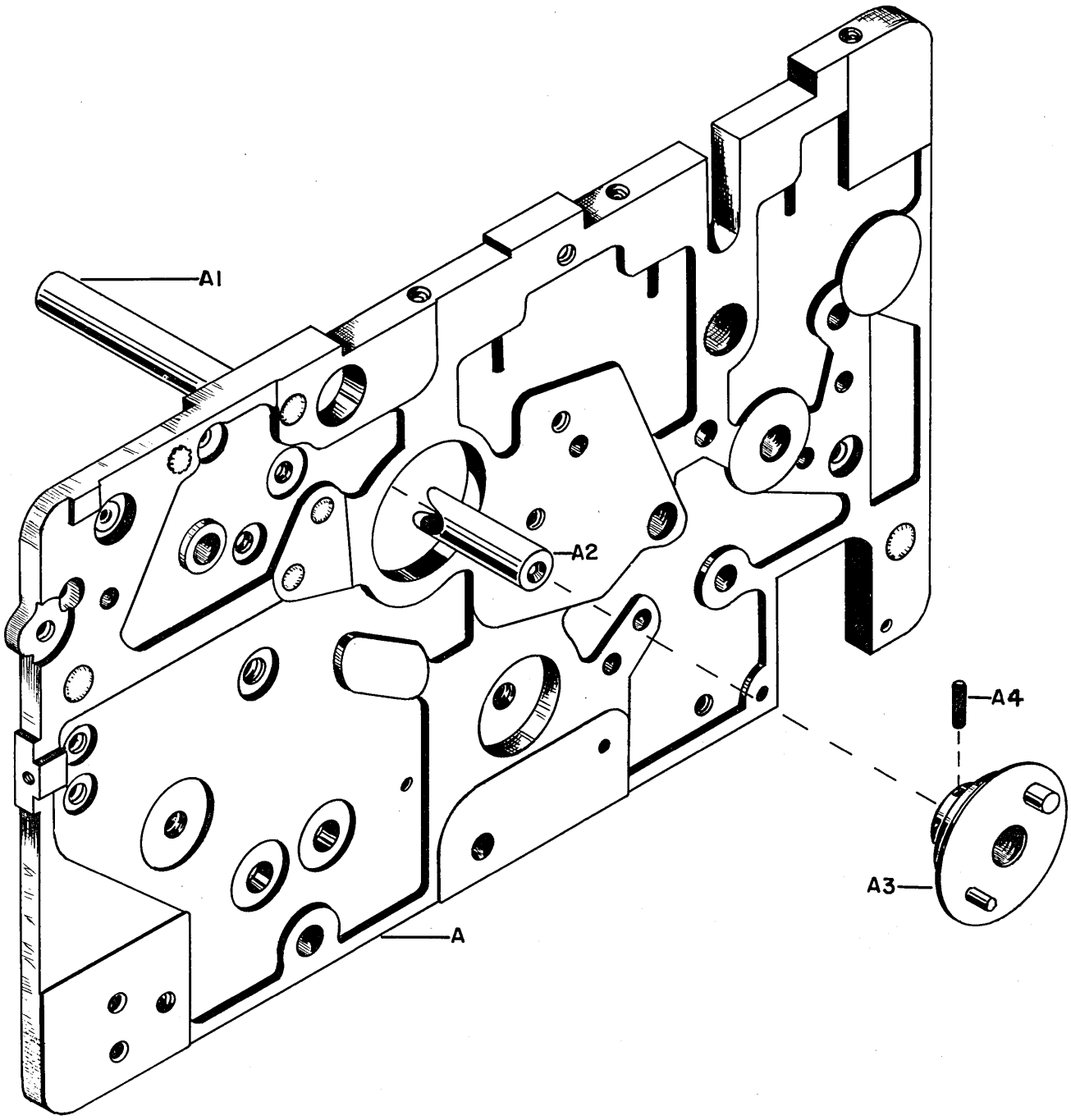

MOTORIZED PUNCH DRIVE - FIGURE 3

Output Units

Ref. No.	Part No.	Part Name
A	1058063	Inner Casting
A1	1058109	Power Shaft Assembly (includes A2, A3, A4)
A2	1058110	Shaft
A3	1058219	Coupling Flange & Pin Assembly
A4	1058114	Spirol Pin

AUXILIARY PUNCH - BASE - FIGURE 4

Output Units

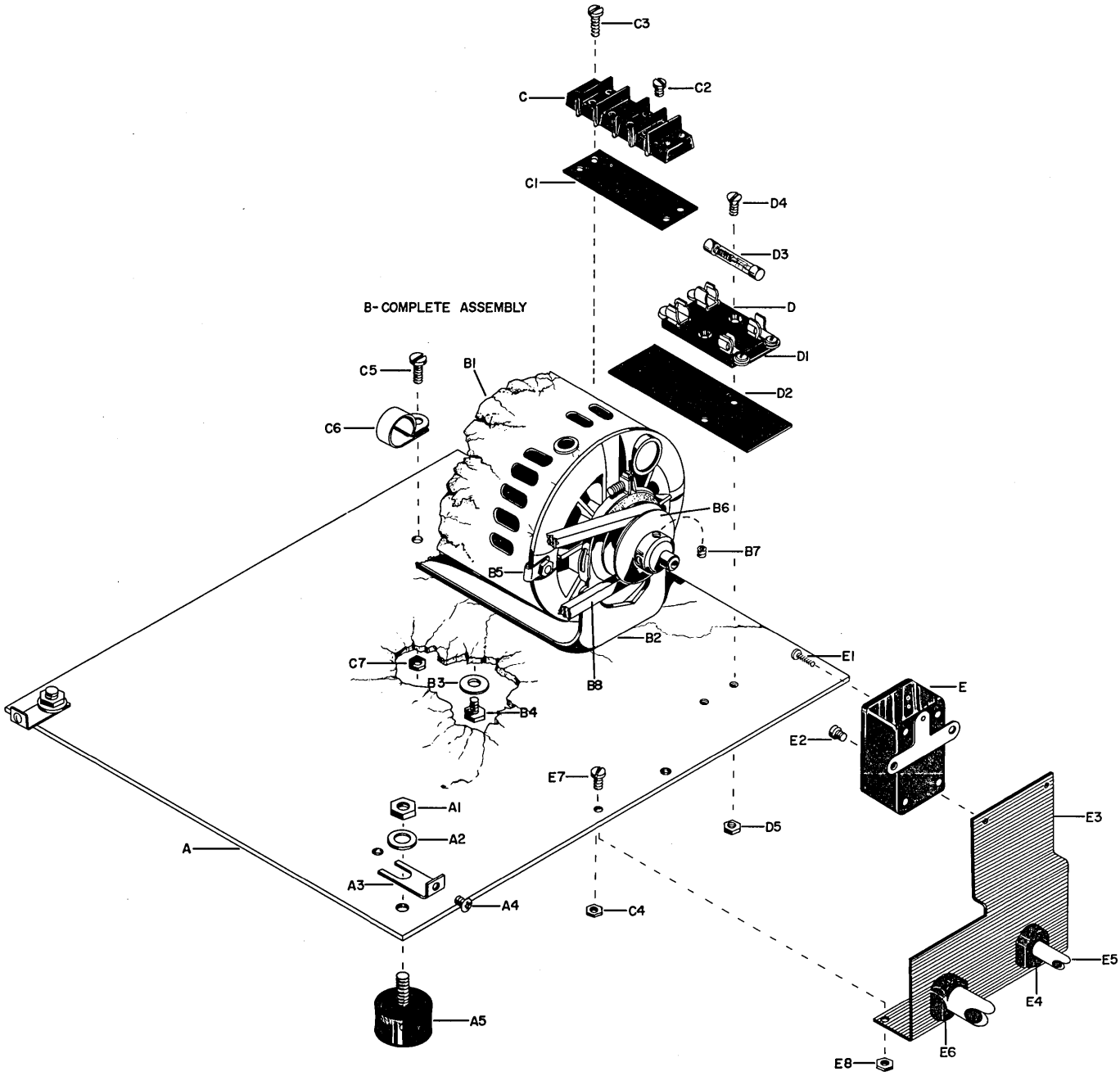

AUXILIARY PUNCH - BASE - FIGURE 4

Output Units

Ref. No.	Part No.	Part Name
A	1058556	Base
A1	3960	Nut
A2	300174	Washer
A3	1058559	Cover Mounting Bracket
A4	1045547	Screw to Mount Cover
A5	1049247	Base Foot
B	1058560	Motor & Cradle Assembly (includes B1, B2, B3 and B4)
B1	1058561	Motor - 110 VAC 50/60 Cycle (includes Mounting Latches)
B2	1053697	Motor Cradle
B3	300174	Washer
B4	180894	Screw to Mount B2
B5	1053193	Cable Clamp
B6		Motor Pulley - See Chart Page 5 Fig. 1
B7	121521	Set Screw
B8		Drive Belt - See Chart Page 5 Fig. 1
C	1058558	Terminal Block
C1	1058698	Insulation Terminal Block
C2	140738	Terminal Screw
C3	1500	Screw to Mount C
C4	23815	Nut for C3
C5	196698	Screw
C6	1054462	Cable Clamp
C7	22815	Nut for C5
D	1053670	Fuse Block
D1	1055874	Brass Jumper Strap
D2	1055670	Fuse Marking Strip
D3	1054872	Fuse 2 Amp
D4	1058716	Screw to Mount D
D5	23815	Nut for D4
E	1054753	Starting Relay
E1	1056803	Starting Relay Terminal Screw
E2	28760	Screw to Mount E to E3
E3	1058765	Starting Relay Bracket (Specify Color)
E4	1042219	Strain Relief Clamp
E5	1056154	Power Cord Assembly
E6	1058637	Strain Relief Clamp for Main Cable
E7	196698	Screw to Mount E3 to A
E8	23815	Nut for E7

AUXILIARY PUNCH - FRAME - FIGURE 5

Output Units

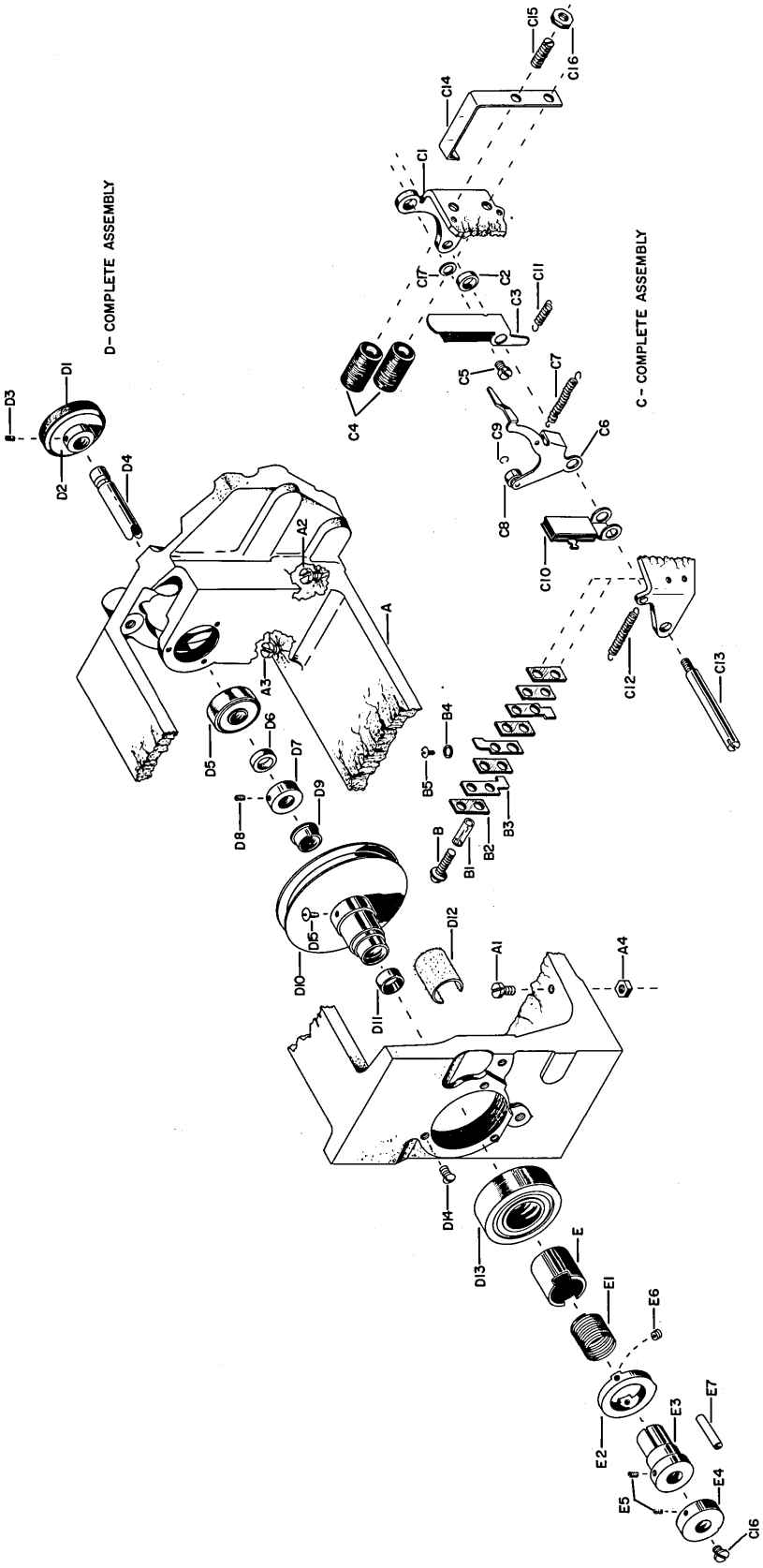

AUXILIARY PUNCH - FRAME - FIGURE 5

Output Units

Ref. No.	Part No.	Part Name
A	1048168	Frame
A1	2031	Screw to Mount A to Base
A2	641	Screw to Mount A to Base
A3	1058620	Screw to Mount A to Base
A4	2899	Nut for A1, A2 and A3
B	173203	Screw
B1	100227	Screw Insulator
B2	1020897	Insulator
B3	1041495	Terminal
B4	1057580	Lock Washer for B5
B5	38794	Terminal Screw
C	1058726	Clutch Yoke and Magnet Assembly 90V
C	1058727	Clutch Yoke and Magnet Assembly 48V
C1	1058527	Magnet Yoke
C2	1058548	Spacer
C3	1058086	Armature Assembly
C4	1058528	Coil Assembly 90V
C4	1058632	Coil Assembly 48V
C5	1090000	Screw to Mount C
C6	1058097	Armature Knock-Off
C7	130487	Spring for C5
C8	1056994	Ball Bearing Cam Follower
C9	304056	Spring Clip for C8
C10	1058089	Clutch Detent Latch Assembly
C11	1058620	Spring for C3
C12	26040	Spring for C10
C13	1058547	Armature Pivot Shaft
C14	1058722	Stop - Clutch Armature
C15	1058723	Core
C16	1091030	Lock Nut for C15
C17	1090058	Washer for C5
D	1058539	Drive Shaft Assembly (includes D1, D2, D3 & D4)
D1	1058541	Coupling Rubber
D2	1058219	Flange & Pin Assembly
D3	1058114	Spirol Pin
D4	1058540	Shaft
D5	1058543	Ball Bearing
D6	1058542	Spacer
D7	143009	Collar for D4
D8	22797	Set Screw for D7
D9	1058083	Flange Bearing

AUXILIARY PUNCH - FRAME - FIGURE 5

Output Units

Ref. No.	Part No.	Part Name
D10	1058535	Clutch Pulley & Hub Assembly - 60 CV. 1228 RPM
D10	1058532	Clutch Pulley & Hub Assembly - 60 CV. 1000 RPM
D11	1058084	Oilite Bearing
D12	1058635	Felt (To provide oil in Clutch Bearings)
D13	1058544	Ball Bearing
D14	155180	Screw Retaining for D5 & D14
D15	140738	Screw for Pulley
D16	1041999	Screw (Shaft Oiling Hole)
E	1058724	Clutch Sleeve
E1	1053308	Clutch Spring
E2	1058023	Knock-Off Cam & Overtravel Stop
E3	1058027	Clutch Collar
E4	1058026	Clutch Detent
E5	121521	Set Screw for E3 & E4
E6	1058019	Set Screw for E2
E7	1053999	Wick (oil)

Friden, Inc.

AUXILIARY PUNCH
PANEL SWITCHES & RELAY ASSEMBLY
FIGURE 6

Output Units

AUXILIARY PUNCH - PANEL SWITCHES & RELAY ASSEMBLY - FIGURE 6

Output Units

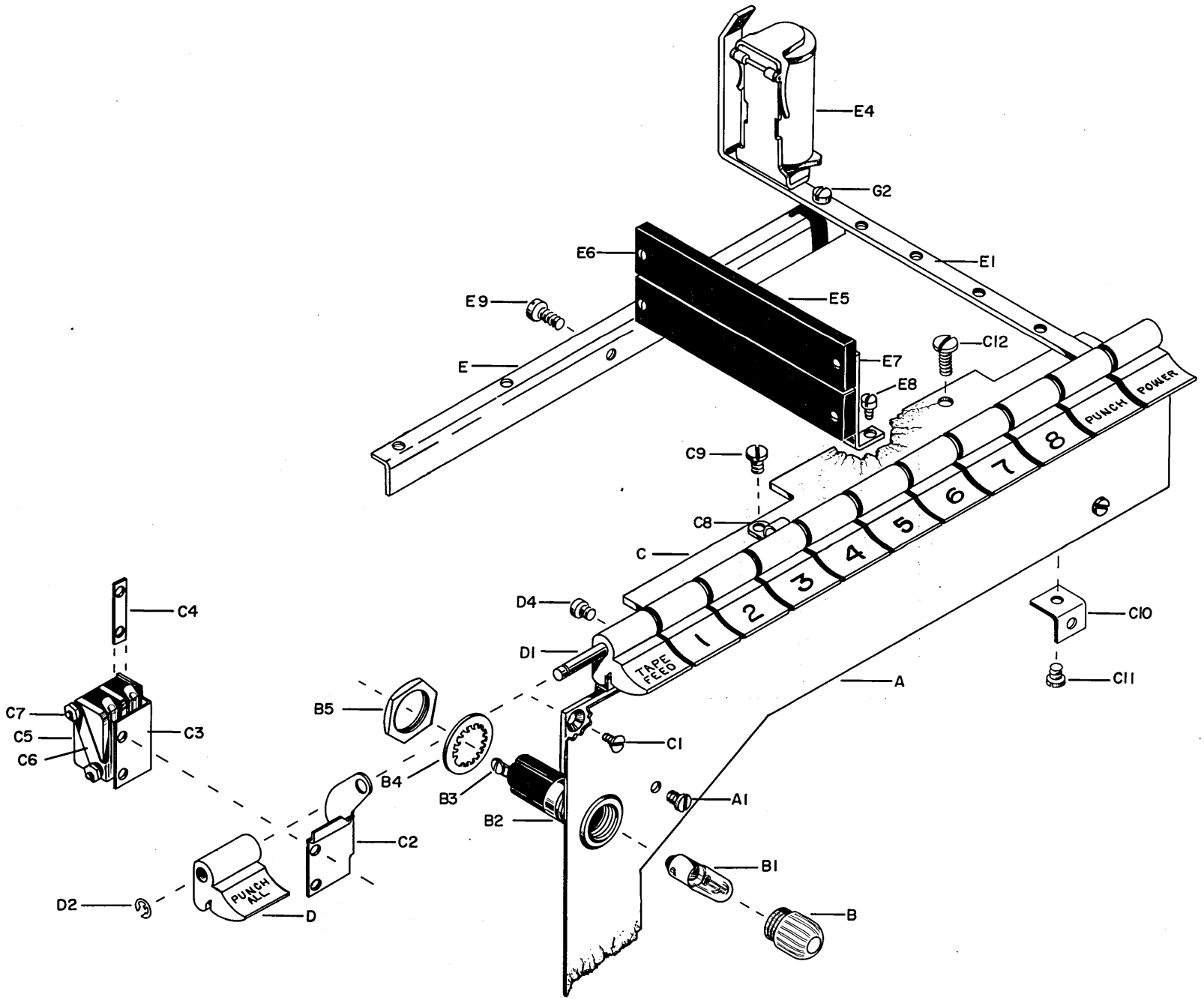

AUXILIARY PUNCH - PANEL SWITCHES & RELAY ASSEMBLY - FIGURE 6

Output Units

Ref. No.	Part No.	Part Name
A	1049061	Front Plate
A1	196298	Screw to Mount A
B	1040277	Lens
B1	1058587	Bulb 90V
B1	1058691	Bulb 48V
B2	1044803	Lamp Assembly (includes B1, B3, B4 & B5)
B3	1040269	Terminal Screw
B4	1040265	Lock Washer
B5	1040267	Nut
C	1049044	Front Plate & Switch Mounting Bracket
C1	1668	Screw
C2	1049053	Switch Mounting Bracket (for Micro Switch)
C3	1049055	Micro Switch Mounting Bracket (Adapter)
C4	1049045	Clamp - Micro Switch Adapter Bracket
C5	1049056	Micro Switch
C6	1049057	Actuator
C7	1049046	Screw to Mount Double Micro Switch
	1668	Screw to Mount Single Micro Switch
		Nut & Lock Washer for Micro Switch (are part of 1049046)
C8	1049251	Cable Clamp
C9	196698	Screw to Mount C8
C10	1049062	Front Plate Mounting Bracket
C11	196298	Screw
C12	186759	Screw to Mount C
D		Contact Buttons
	1049117	"Power" Button
	1049119	"1" Button
	1049120	"2" Button
	1049121	"3" Button
	1049122	"4" Button
	1049123	"5" Button
	1049124	"6" Button
	1049125	"7" Button
	1049132	"8" Button
	1049231	"Punch" Button
	1049232	"Punch All" Button
	1053623	"Tape Feed" Button
D1	1049248	Switch Button Pivot
D2	1092125	Retaining Clip
D3	1049047	Switch Mounting Bracket (not shown)
D4	28760	Screw to Mount D3

AUXILIARY PUNCH - PANEL SWITCHES & RELAY ASSEMBLY - FIGURE 6

Output Units

Ref. No.	Part No.	Part Name
E	1049075	Relay Mounting Bracket
E1	1049068	Relay Mounting Bar
E2	3500	Screw
E3	13364	Relay Bar Spacer (not shown)
		See Relay Chart - Electrical Section Fig. 3
E5	1044247	Terminal Block
E6	1090559	Screw
E7	1049074	Terminal Block Mounting Bracket
E8	1091098	Screw
E9	337	Screw to Mount E to Frame Casting

PARTS LIST

FRIDEN
FLEXOWRITER-JUSTOWRITER

SPECIAL FEATURES

Figure 1-Pin Feed Platen

Figure 2-Flexowriter Stand

Figure 3-Motorized Punch & Reader & TCPC Stand

Figure 4-Selectadata Stand & Rewind Assembly

Figure 5-Electric Tape Winder

Figure 6-Motorized Punch Rewind Assembly

Figure 7-Unwind Spool

Figure 8-Unwind Spool & Stand

Figure 9-Tape Unwind Spool for Selectadata

Figure 10-Label Holder

FRIDEN, INC.
HOME OFFICE: SAN LEANDRO, CALIFORNIA
SALES AND SERVICE THROUGHOUT WORLD

Printed in U. S. A.

Throughout this section of the Parts Manual, we have shown the part number for the complete Stands, Wind Assemblies and Unwind Assemblies.

These numbers have been shown for your convenience only. The Stands, Winders and Unwinders are Sales Department items, and consequently, must be ordered on Field Sales Order Form 1015R2.

These assemblies are Sales Department commission items. Therefore, any request from a customer for an item of this type will be turned over to the Branch Manager.

Friden, Inc.

PIN FEED PLATEN

Special Features

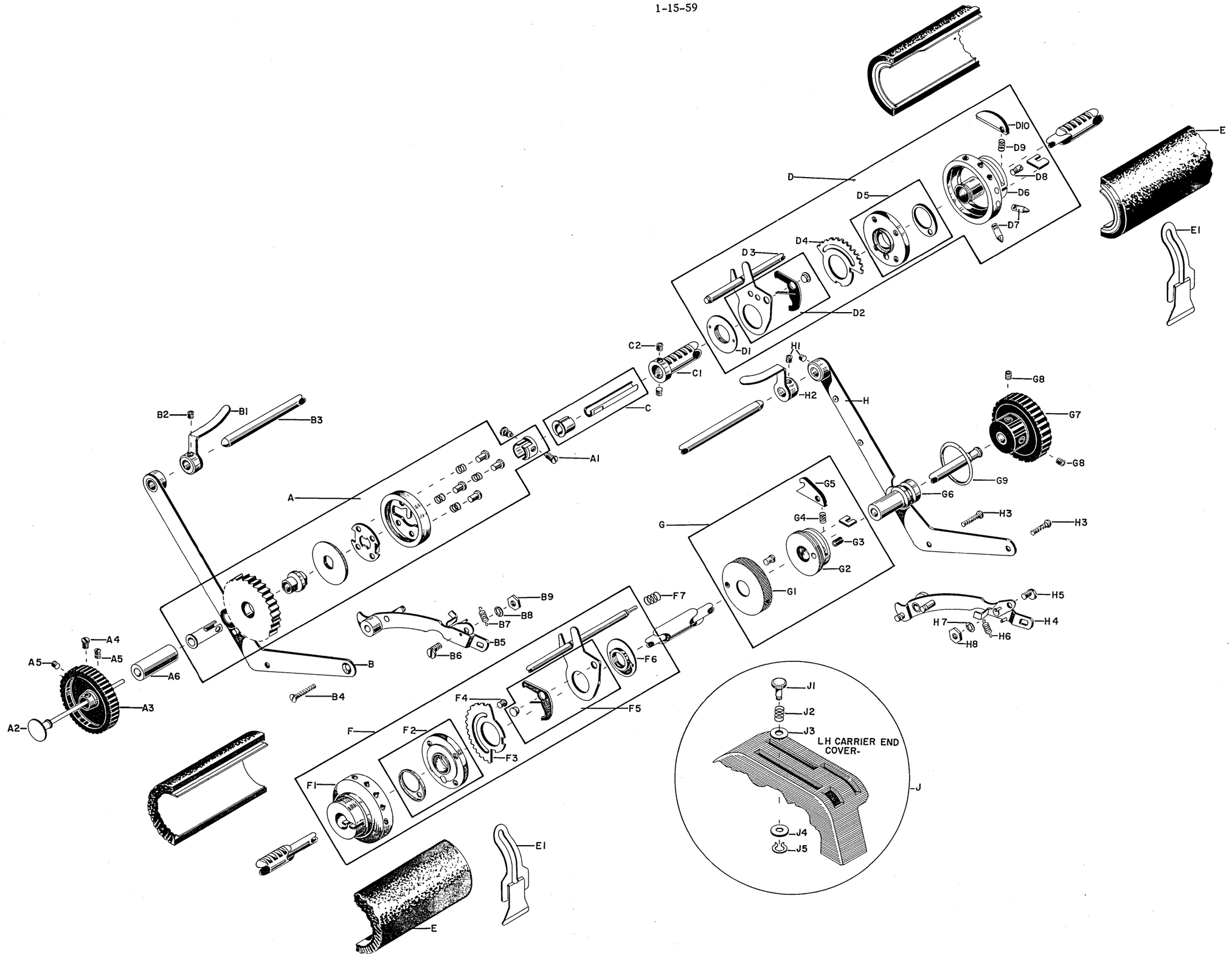
D10
D9
D8
D6
D7
D
D5
D4
D3
D2
D1
E
E1
C2
C1
C
H1
H2
H
G8
G7
G8
G9
G6
H3
H3
B2
B1
B3
A1
A
G5
G4
G3
G2
G1
G
B9
B8
B7
B5
B6
F7
F6
H5
H4
H7
H6
H8
A4
A5
A5
A6
A3
A2
B
B4
F4
F5
F
F2
F3
F1
J1
J2
J3
LH CARRIER END COVER-
J
J4
J5
E1
E

PIN FEED PLATEN

Special Features

Ref. No.	Part No.	Part Name
A	1041592	33 Tooth Variable Ratchet Assembly
A	1041593	44 Tooth Variable Ratchet Assembly
A	1041605	55 Tooth Variable Ratchet Assembly
A	1042161	66 Tooth Variable Ratchet Assembly
A1	1041589	Screw
A2	1041583	Platen Clutch Release Shaft
A3	1041587	Left Hand Platen Knob (black)
A3	DX-1041587	Left Hand Platen Knob (brown)
A4	1041582	Screw for A3
A5	1041586	Set Screw
A6	1041584	Platen Shaft Bushing
B	1057387	Upright Assembly - Left Hand
B1	1057385	Form Guide
B2	1042194	Set Screw
B3	1057381	12" Carriage Form Guide
B3	1057376	16" Carriage Form Guide
B3	1057378	20" Carriage Form Guide
B4	1055261	Screw
B5	1041142	Bail Assembly - Left Hand
B6	1045306	Eccentric Screw
B7	1045307	Spring
B8	1045308	Lock Washer
B9	1045309	Nut
C	1041598	Bearing & Platen Shaft 12"
C	1041599	16" Platen Shaft
C	1041600	20" Platen Shaft
C1	1041595	12" Platen Tube
C1	1041596	16" Platen Tube
C1	1041597	20" Platen Tube
C2	1041588	Set Screw
D	1041602	Pin wheel Assembly (Full size)
D	1041604	Pin wheel Assembly (Under cut)
D1	1045292	Pin wheel Nut
D2	1045293	Cam Locating Arm Assembly - Left Hand
D3	1057384	12" Carriage - Rod-Cam Anchor
D3	1057379	16" Carriage - Rod-Cam Anchor
D3	1057382	20" Carriage - Rod-Cam Anchor
D4	1045294	Cam Locating Plate
D5	1045302	Cam Disc Assembly
D6	1045298	Pin wheel Body Assembly - Left Hand (Full Size)
D6	1045299	Pin wheel Body Assembly - Left Hand (Under Cut)
D7	1045303	Pin wheel Pin
D8	1045296	Latch Screw
D9	1045295	Latch Spring (Left Hand only)
D10	1045297	Pin wheel Latch (Left Hand only)

PIN FEED PLATEN

Special Features

Ref. No.	Part No.	Part Name
E		See Platen Sector Chart - Page
E1	1057383	Finger Feed
F	1041601	Pin wheel Assembly - Right Hand (Full Size)
F	1041603	Pin wheel Assembly - Right Hand (Under Cut)
F1	1045300	Pin wheel Body - Right Hand (Full Size)
F1	1045301	Pin wheel Body - Right Hand (Full Size)
F2	1045302	Cam Disc Assembly
F3	1045294	Cam Locating Plate
F4	1045305	Screw
F5	1045304	Cam Locating Arm Assembly - Right Hand
F6	1045292	Pin wheel Nut
F7	1045310	Spring (Cam Anchor Rod)
G	1041636	Draw nut Assembly
G1	1045315	Draw nut Sleeve
G2	1045314	Draw nut Guide Assembly
G3	1045313	Roll Pin
G4	1045312	Latch Spring
G5	1045311	Draw nut Latch
G6	1041585	Bushing - Right Hand
G7	DX-1041591	Right Platen Knob (Brown)
G7	1041591	Right Hand Platen Knob (Black)
G8	1041590	Set Screw
G9	1044896	Shim .005
G9	1044897	Shim .015
G9	1044898	Shim .031
H	1057388	Upright Assembly - Right Hand
H1	1042194	Set Screw
H2	1057385	Form Guide
H3	1055261	Screw
H4	1041143	Bail Assembly R. H.
H5	1045306	Eccentric Screw
H6	1045307	Spring
H7	1045308	Lock Washer
H8	1045309	Nut
J	1054839	Lock out (Friction Stud Assembly)
J1	1045316	Stud
J2	1045317	Spring
J3	1045318	Washer
J4	1045318	Washer
J5	1045319	Snap Washer

PIN FEED PLATEN

Chart

Sector Part Number	Hardness	Overall Form Width	Diameter 1.750 - 1.710
1041594	1	4 3/4	X
1041655	1	5 1/2	X
1041656	1	5 3/4	X
1041657	1	6 1/2	X
1041658	1	6 3/4	X
1041659	1	8	X
1041660	1	8 9/32	X
1041668	1	8 1/2	X
1041669	1	9 7/16	X
1041670	1	9 1/2	X
1041671	1	9 3/4	X
1041672	1	9 7/8	X
1041673	1	10	X
1041674	1	10 3/8	X
1041675	1	10 5/8	X
1041676	1	10 1/4	X
1041677	1	10 9/16	X
1041678	1	11 3/4	X
1041679	1	12 7/8	X
1041680	1	12 27/32	X
1041681	1	12 11/32	X
1041682	1	13 7/32	X
1041683	1	13 5/8	X
1041684	1	13 7/8	X
1041685	1	14	X
1041686	1	14 1/4	X
1041687	1	14 9/16	X
1041688	1	14 7/8	X
1041689	1	16	X
1041690	1	16 3/4	X
1041691	1	17 1/8	X
1041692	1	17 3/4	X
1041693	1	17 25/32	X
1041694	1	17 27/32	X
1041695	1	17 7/8	X
1041696	1	18	X
1041697	1	18 1/4	X
1045893	1	6''	X
1041699	1	18 9/16	X
1041700	2	4 3/4	X
1041701	2	5 1/2	X
1041702	2	5 3/4	X
1041703	2	6 1/2	X
1041704	2	6 3/4	X
1041705	2	8	X

PIN FEED PLATEN

Chart

Sector Part Number	Hardness	Overall Form Width	Diameter 1.750 - 1.710
1041706	2	8 9/32	X
1041707	2	8 1/2	X
1041708	2	9 7/16	X
1041709	2	9 1/2	X
1041710	2	9 3/4	X
1041711	2	9 7/8	X
1041712	2	10	X
1041713	2	10 3/8	X
1041714	2	10 5/8	X
1041715	2	10 1/4	X
1041716	2	10 9/16	X
1041717	2	11 3/4	X
1041718	2	12 7/8	X
1041719	2	12 27/32	X
1041720	2	12 11/32	X
1041721	2	13 7/32	X
1041722	2	13 5/8	X
1041723	2	13 7/8	X
1041724	2	14	X
1041725	2	14 1/4	X
1041726	2	14 9/16	X
1041727	2	14 7/8	X
1041728	2	16	X
1041729	2	16 3/4	X
1041730	2	17 1/8	X
1041731	2	17 3/4	X
1041732	2	17 25/32	X
1041733	2	17 27/32	X
1041734	2	17 7/8	X
1041735	2	18	X
1041736	2	18 1/4	X
1041738	2	18 9/16	X
1042221	2	7 1/2"	X
1041816	2	9	X
1042220	2	9 13/16"	X
1042199	2	9 1/8	X
1042190	2	8 1/2	1.710"
1042369	2	9 5/8"	X
1043022	2	12 1/2"	X
1043047	2	9 3/8	X
1043051	2	9 15/16"	X
1043075	2	4 5/8	X
1043109	2	8 5/16	X
1043192	2	18 3/4	X
1043193	2	5 7/8	X

PIN FEED PLATEN

Chart

Sector Part Number	Hardness	Overall Form Width	Diameter 1.750 - 1.710
1043244	2	15	X
1043281	2	17 11/16	X
1043337	2	11	X
1043364	2	15 1/2	X
1043864	2	9 1/4	X
1043918	2	8 5/32"	X
1044571	2	17 5/8"	X
1044698	2	14 3/4"	X
1044867	2	17 1/16	X
1040249	2	10 1/8	X
1045026	2	14 1/2	X
1040285	2	8 1/4"	X
1040288	2	14 13/16"	X
1045221	2	18 11/16"	X
1040360	2	11 7/8"	X
1040378	2	13 23/32	X
1045663	2	6"	X
1045676	2	10 11/16"	X
1045747	2	5 1/4	X
1045971	2	18 3/16	X
1046052	2	18 9/32	X
1046074	2	17 9/32	X
1046233	2	11 11/16	X
1046254	2	13 13/16	X
1046269	2	12 5/8	X
1046301	2	13 5/32	X
1046333	2	14 11/16	X
1046478	2	13 9/16	X
1046545	2	12 15/16	X
1041817	3	4 3/4	X
1041818	3	4 3/4	X
1041819	3	5 1/2	X
1041820	3	5 1/2	X
1041821	3	5 3/4	X
1041822	3	5 3/4	X
1041823	3	6 1/2	X
1041824	3	6 1/2	X
1041825	3	6 3/4	X
1041826	3	6 3/4	X
1041827	3	8	X
1041828	3	8	X
1041829	3	8 9/32	X
1041830	3	8 9/32	X
1041831	3	8 1/2	X
1041832	3	8 1/2	X

PIN FEED PLATEN

Chart

Sector Part Number	Hardness	Overall Form Width	Diameter 1.750 - 1.710
1041833	3	9 7/16	X
1041834	3	9 7/16	X
1041835	3	9 1/2	X
1041836	3	9 1/2	X
1041837	3	9 3/4	X
1041838	3	9 3/4	X
1041839	3	9 7/8	X
1041840	3	9 7/8	X
1041841	3	10	X
1041842	3	10	X
1041843	3	10 3/8	X
1041844	3	10 3/8	X
1041845	3	10 5/8	X
1041846	3	10 5/8	X
1041847	3	10 1/4	X
1041848	3	10 1/4	X
1041849	3	10 9/16	X
1041850	3	10 9/16	X
1041851	3	11 3/4	X
1041852	3	11 3/4	X
1041853	3	12 7/8	X
1041854	3	12 7/8	X
1041855	3	12 27/32	X
1041856	3	12 27/32	X
1041857	3	12 11/32	X
1041858	3	12 11/32	X
1041859	3	13 7/32	X
1041860	3	13 7/32	X
1041861	3	13 5/8	X
1041862	3	13 5/8	X
1041863	3	13 7/8	X
1041864	3	13 7/8	X
1041865	3	14	X
1041866	3	14	X
1041867	3	14 1/4	X
1041868	3	14 1/4	X
1041869	3	14 9/16	X
1041870	3	14 9/16	X
1041871	3	14 7/8	X
1041872	3	14 7/8	X
1041873	3	16	X
1041874	3	16	X
1041875	3	16 3/4	X
1041876	3	16 3/4	X
1041877	3	17 1/8	X

PIN FEED PLATEN

Chart

Sector Part Number	Hardness	Overall Form Width	Diameter 1.750 - 1.710
1041878	3	17 1/8	X
1041879	3	17 3/4	X
1041880	3	17 3/4	X
1041881	3	17 25/32	X
1041882	3	17 25/32	X
1041883	3	17 27/32	X
1041884	3	17 27/32	X
1041885	3	17 1/8	X
1041886	3	17 1/8	X
1041887	3	18	X
1041888	3	18	X
1041889	3	18 1/4	X
1041890	3	18 1/4	X
1040376	3	13 1/2	X
1041893	3	18 9/16	X
1041894	3	18 9/16	X
1042157	3	9 1/4	X
1042204	3	11	X
1042812	3	9 1/4	X
1042813	3	7 7/8	X
1043057	3	12 13/16	X
1043861	3	17 7/8	X
1044589	3	9 3/8"	X
1044810	3	8 3/8"	X
1045407	3	10 11/16"	X
1045962	3	7 5/32"	X
1046247	3	9 3/16	X
1046330	3	12	X
1046487	3	8 1/4	X

FLEXOWRITER STAND - FIGURE 2

Special Features

A- COMPLETE ASSEMBLY

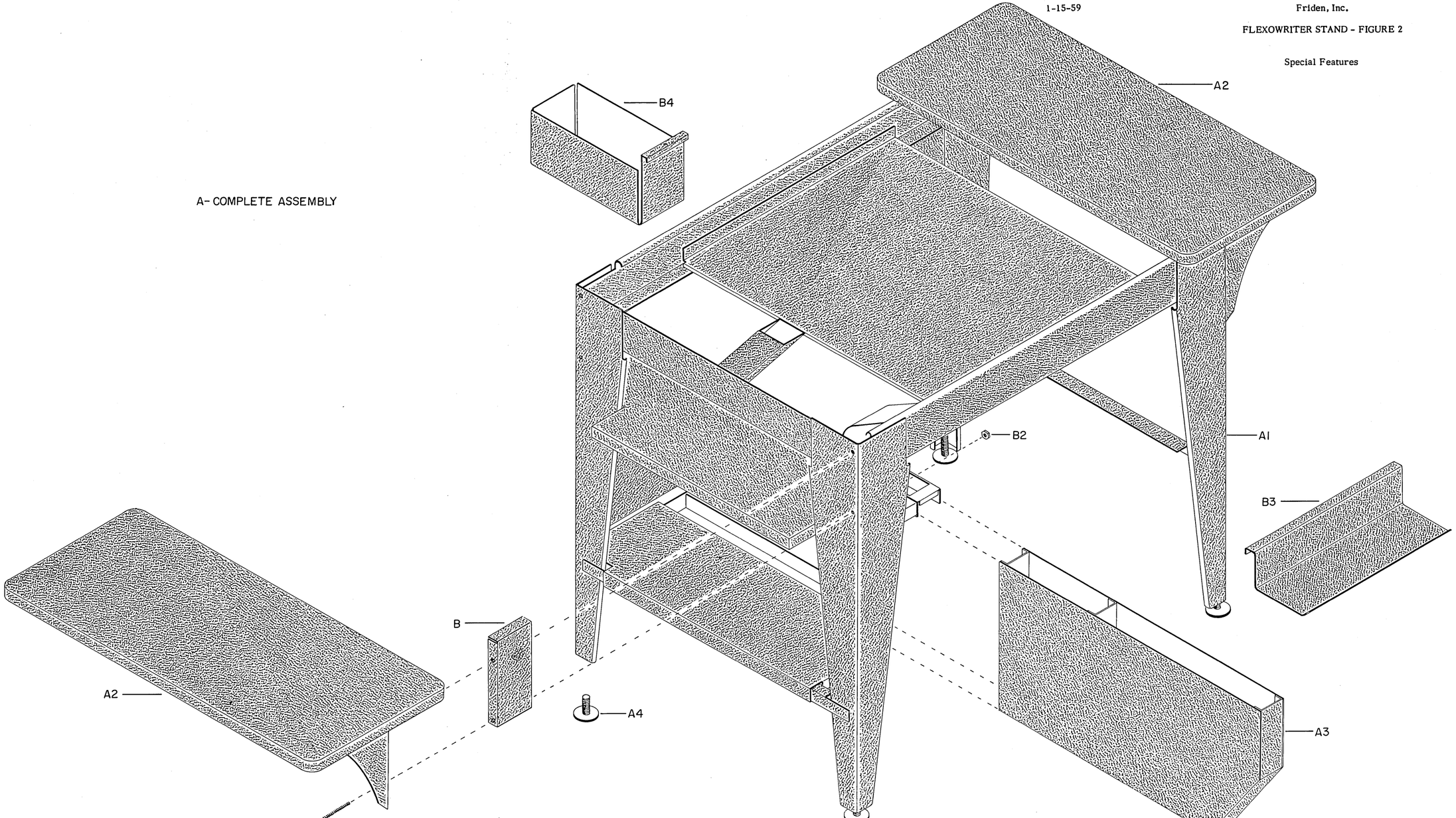

FLEXOWRITER STAND - FIGURE 2

Special Features

Ref. No.	Part No.	Part Name
A	1056700	Standard 10" Shelf - Flexowriter & Justowriter Stand Assembly
A	1056711	Standard 18" Shelf - Flexowriter & Justowriter Stand Assembly
A	1040219	Edge Card Stand Assembly (10" Shelf)
A	1041553	Edge Card Stand Assembly (18" Shelf)
A1	1056710	Frame - Specify Color
A2	1055586	10" Shelves - Specify Color
A2	1056130	18" Shelves - Specify Color
A3	1056704	Chip Box - Specify Color
A4	1054863	Foot
B	1040230	Extension for desk top - Specify Color
B1	E32042	Screw to mount A2 without B
B1	1040230	Screw to mount A2 with B
B2	1090034	Nut
B3	1040218	Edge Card Shelf - Specify Color
B4	1040216	Edge Card Magazine - Specify Color

Friden, Inc.

FLEXOWRITER STAND - FIGURE 2

Special Features

MOTORIZED PUNCH, READER & TCPC STAND - FIGURE 3

Special Features

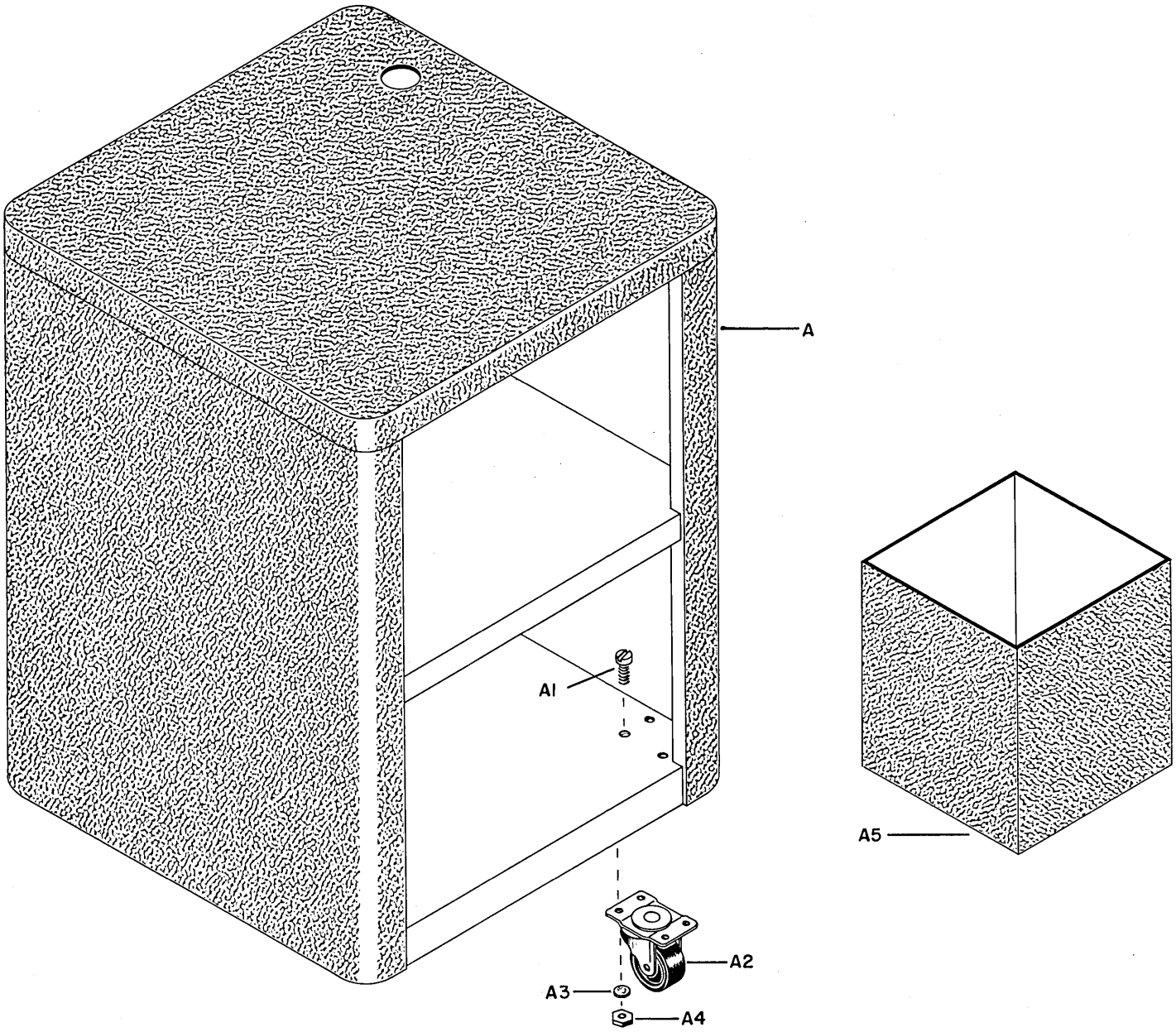

MOTORIZED PUNCH, READER & TCPC STAND - FIGURE 3

Special Features

Ref. No.	Part No.	Part Name
A	1045925	Motorized Punch & Reader Stand (Specify Color)
A	1046111	Tab Card Punch Control Unit Stand (Specify Color)
A1	337	Screw
A1	1049309	Screw (New Style without A3 & A4)
A2	1045325	Caster
A3	1045342	Lock Washer
A4	1040498	Nut
A5	1058633	Chad Box

SELECTADATA STAND & REWIND ASSEMBLY - FIGURE 4

Special Features

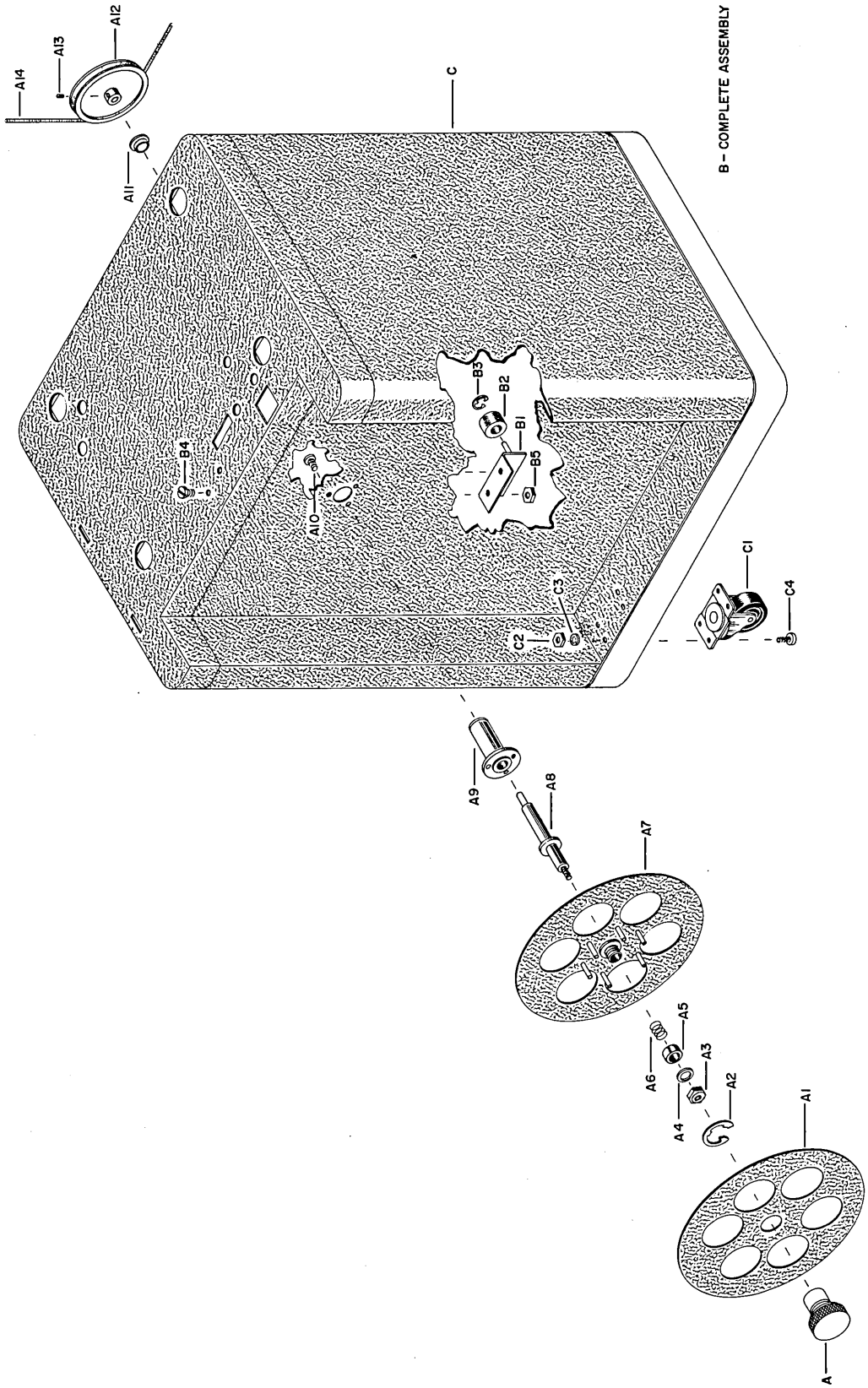

SELECTADATA STAND & REWIND ASSEMBLY - FIGURE 4

Special Features

Ref. No.	Part No.	Part Name
A	1048162	Knob
A1	1048161	Flange for Wind up Reel (outside) Specify Color
A2	1048163	Retaining Clip
A3	1048164	Nut
A4	1048165	Washer
A5	1048179	Spacer
A6	1048181	Spring
A7	1048155	Flange for Wind up Reel (inside) Specify Color
A8	1048151	Shaft
A9	1048147	Collar
A10	196298	Screw to mount A9
A11	1090384	Bushing
A12	1058609	Pulley
A13	121521	Set Screw
A14	1045765	Spring Belt
B	1049023	Bracket & Roller Assembly (includes B1, B2 & B3)
B1	1049024	Bracket
B2	1048143	Roller
B3	1056265	Retaining Clip
B4	196298	Screw
B4	1049310	Screw (new style without B5 Nut)
B5	7341	Nut
C	1049022	Stand - Specify Color
C1	1045325	Casters
C2	1040498	Nut
C3	1045342	Lock Washer
C4	1049309	Screw (new style without C2 & C3)
C4	337	Screw

ELECTRIC TAPE WINDER - FIGURE 5

Special Features

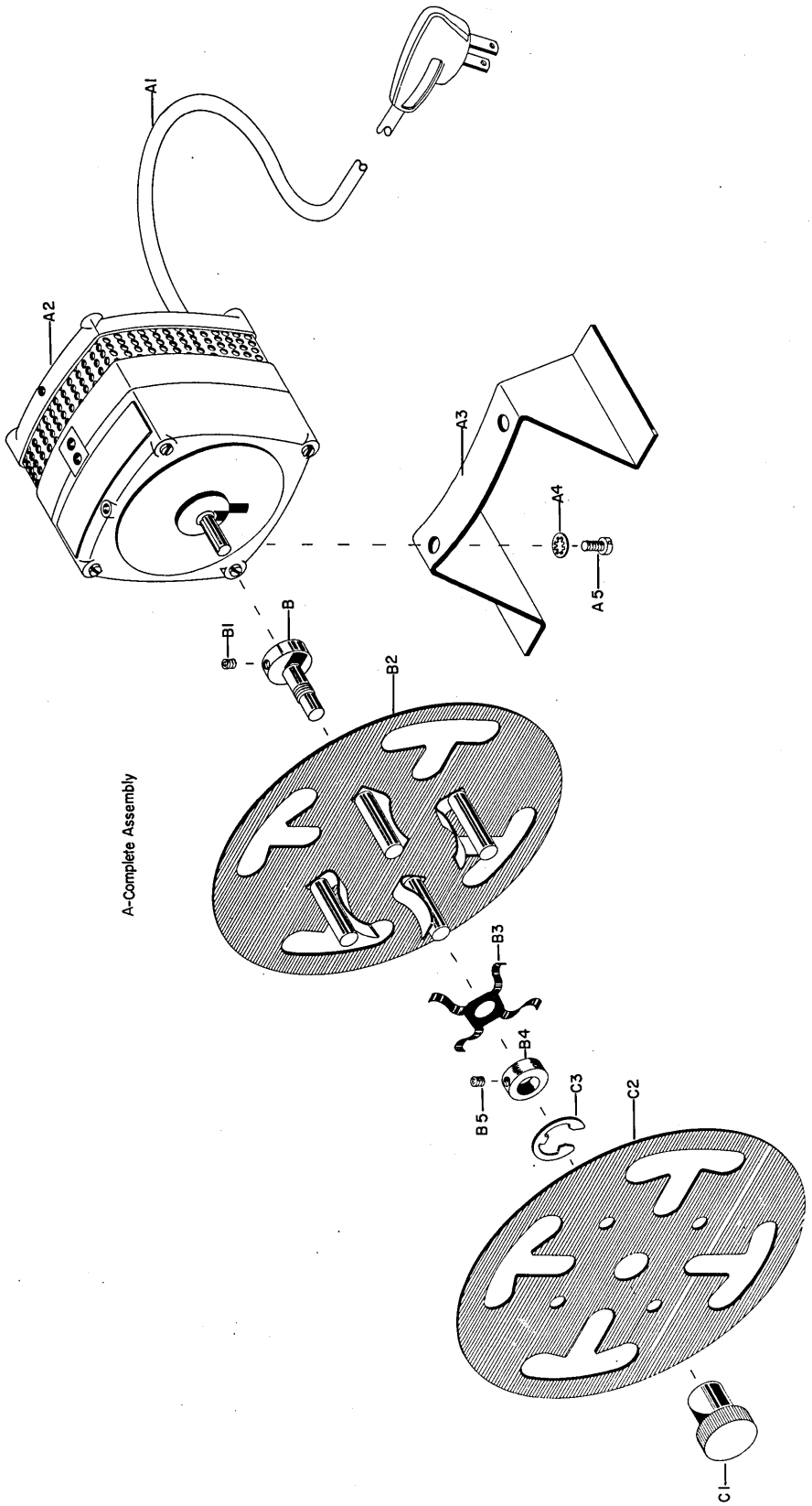

ELECTRIC TAPE WINDER - FIGURE 5

Special Features

Ref. No.	Part No.	Part Name
A	1054591	Complete Assembly
A1	1054696	Power Cord
A2	1054593	Motor with Power Cord
A3	1054595	Motor Mounting Bracket
A4	56121	Lock Washer
A5	443	Screw
B	1058612	Rewind Spool Shaft
B1	1058615	Set Screw
B2	1058617	Rewind Spool - Flange Assembly
B3	186554	Spring
B4	9299	Collar
B5	121521	Set Screw
C1	1058611	Knob
C2	1058614	Rewind Cover
C3	1058610	Retaining Ring

MOTORIZED PUNCH REWIND ASSEMBLY - FIGURE 6

Special Features

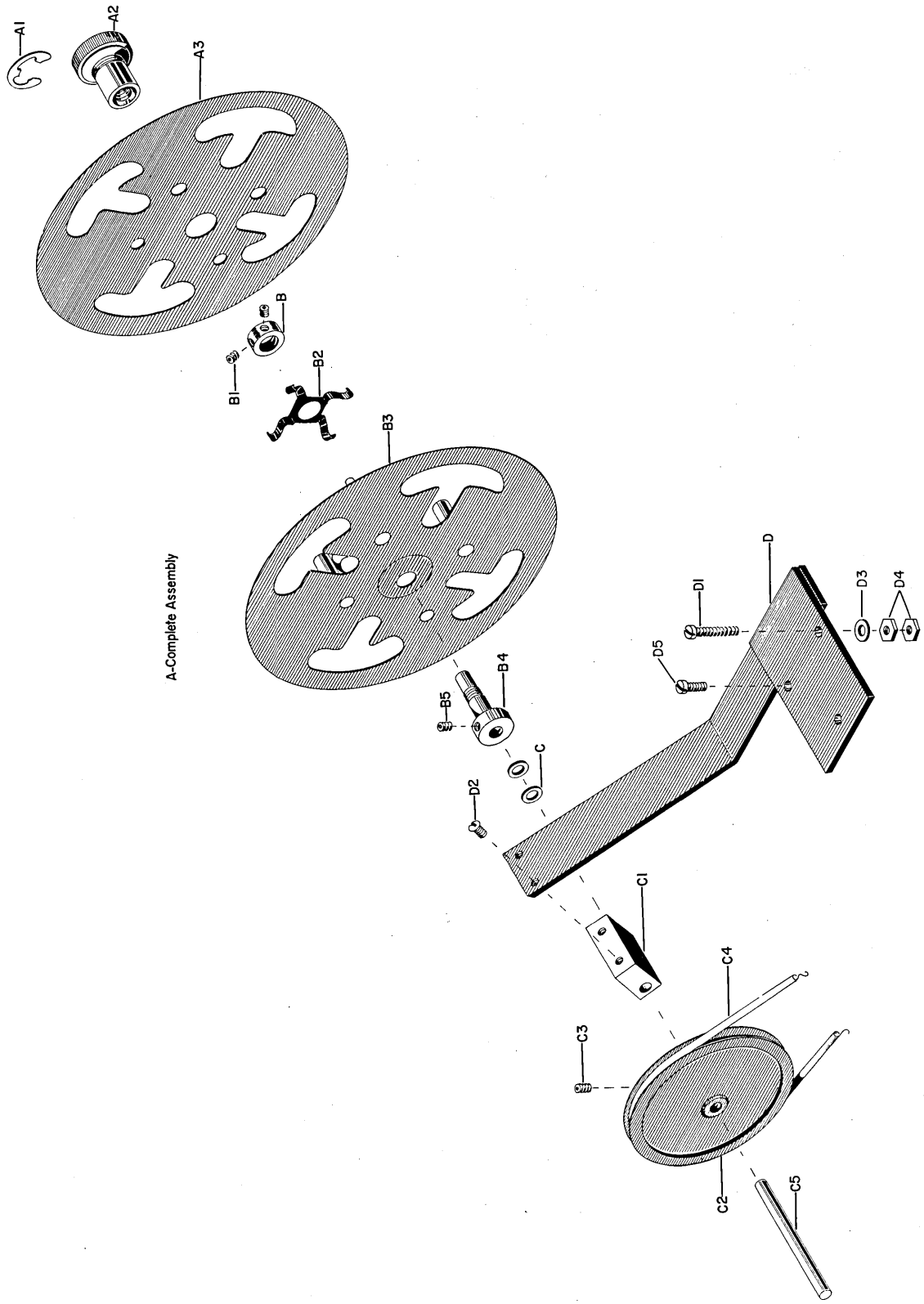

MOTORIZED PUNCH REWIND ASSEMBLY - FIGURE 6

Special Features

Ref. No.	Part No.	Part Name
A	1058613	Rewind Cover Assembly (Specify Color)
A1	1058610	Retaining Ring
A2	1058611	Knob
A3	1058614	Rewind Cover (Specify Color)
B	9299	Collar
B1	121521	Set Screw
B2	186554	Spring
B3	1058617	Rewind Spool - Flange Assembly (Specify Color)
B4	1058612	Rewind Spool Shaft
B5	1058615	Set Screw
C	1058603	Spacer
C1	1058591	Bearing
C2	1058609	Pulley
C3	121521	Set Screw
C4	1045765	Spring - Belt
C5	1058592	Rewind Shaft
D	1058593	Bracket (Specify Color)
D1	1058602	Screw
D2	196398	Screw
D3	1091121	Spacer
D4	2899	Nut
D5	2031	Screw

UNWIND SPOOL - FIGURE 7

Special Features

A-COMPLETE ASSEMBLY

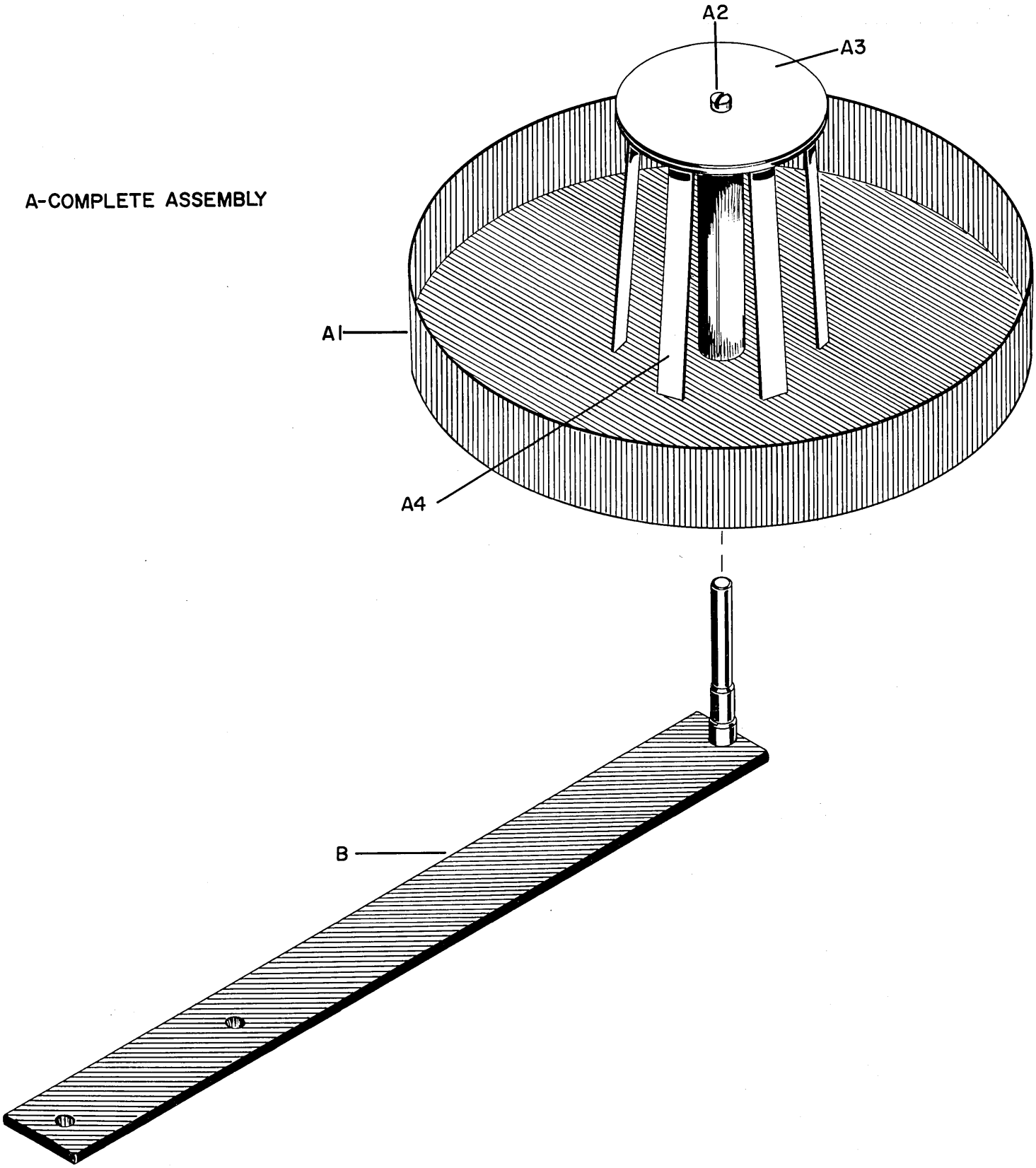

UNWIND SPOOL - FIGURE 7

Special Features

Ref. No.	Part No.	Part Name
A	1054587	Tape Unwinder Spool Assembly (Specify Color)
A1	109001	Unwind Spool (Specify Color)
A2	38351	Screw
A3	1040246	Tape Guide Support
A4	1040247	Tape Guide (Specify Color)
B	1058598	Tape Unwind Bracket (Specify Color)

UNWIND SPOOL & STAND - FIGURE 8

Special Features

A-COMPLETE ASSEMBLY

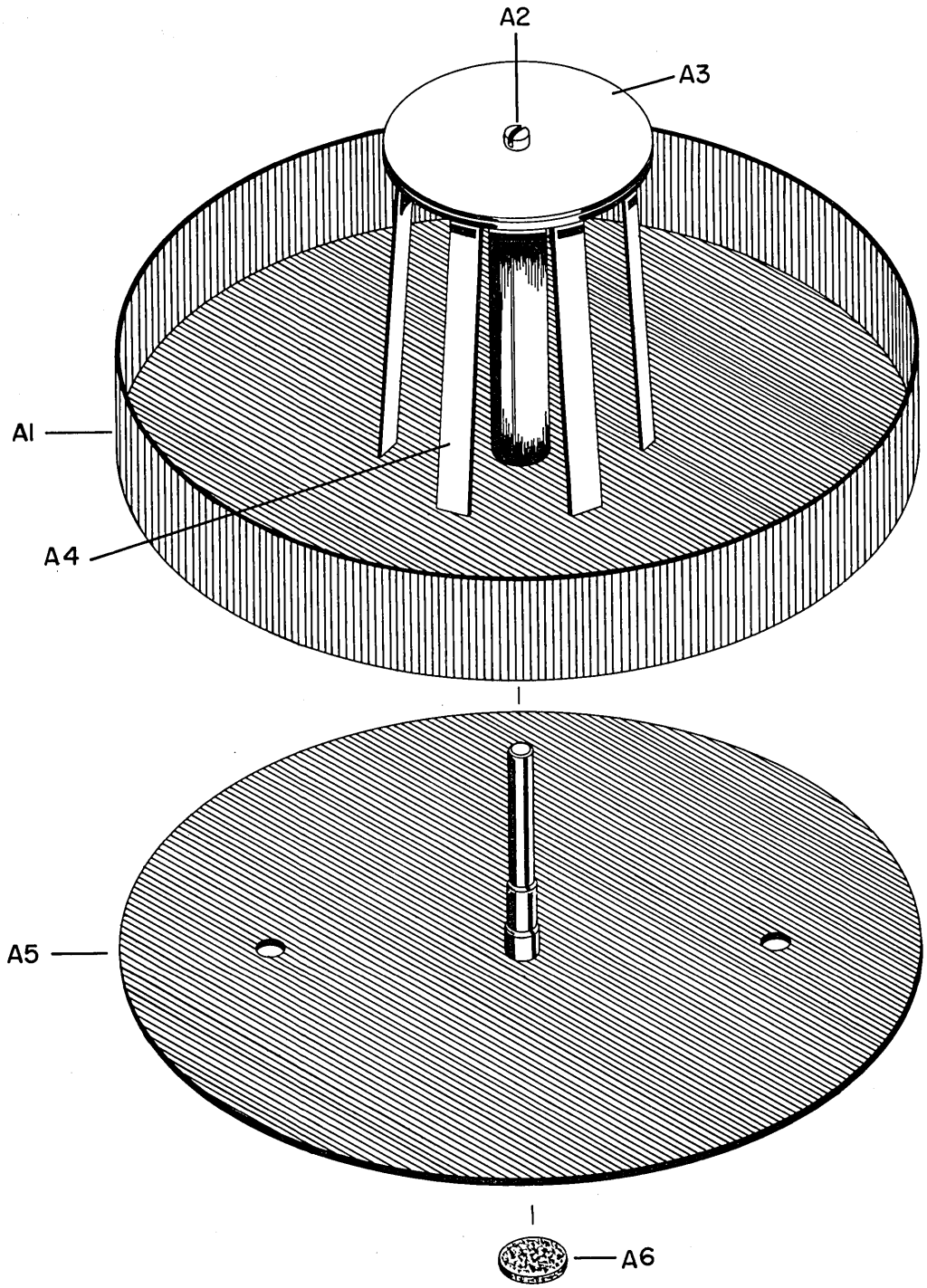

UNWIND SPOOL & STAND - FIGURE 8

Special Features

Ref. No.	Part No.	Part Name
A	1054614	Unwind Spool & Stand Assembly (Specify Color)
A1	109001	Unwind Spool (Specify Color)
A2	38351	Screw
A3	1040246	Tape Guide Support
A4	1040247	Tape Guide (Specify Color)
A5	1054582	Support Stand (Specify Color)
A6	1054586	Cork Foot

TAPE UNWIND SPOOL FOR SELECTADATA - FIGURE 9

Special Features

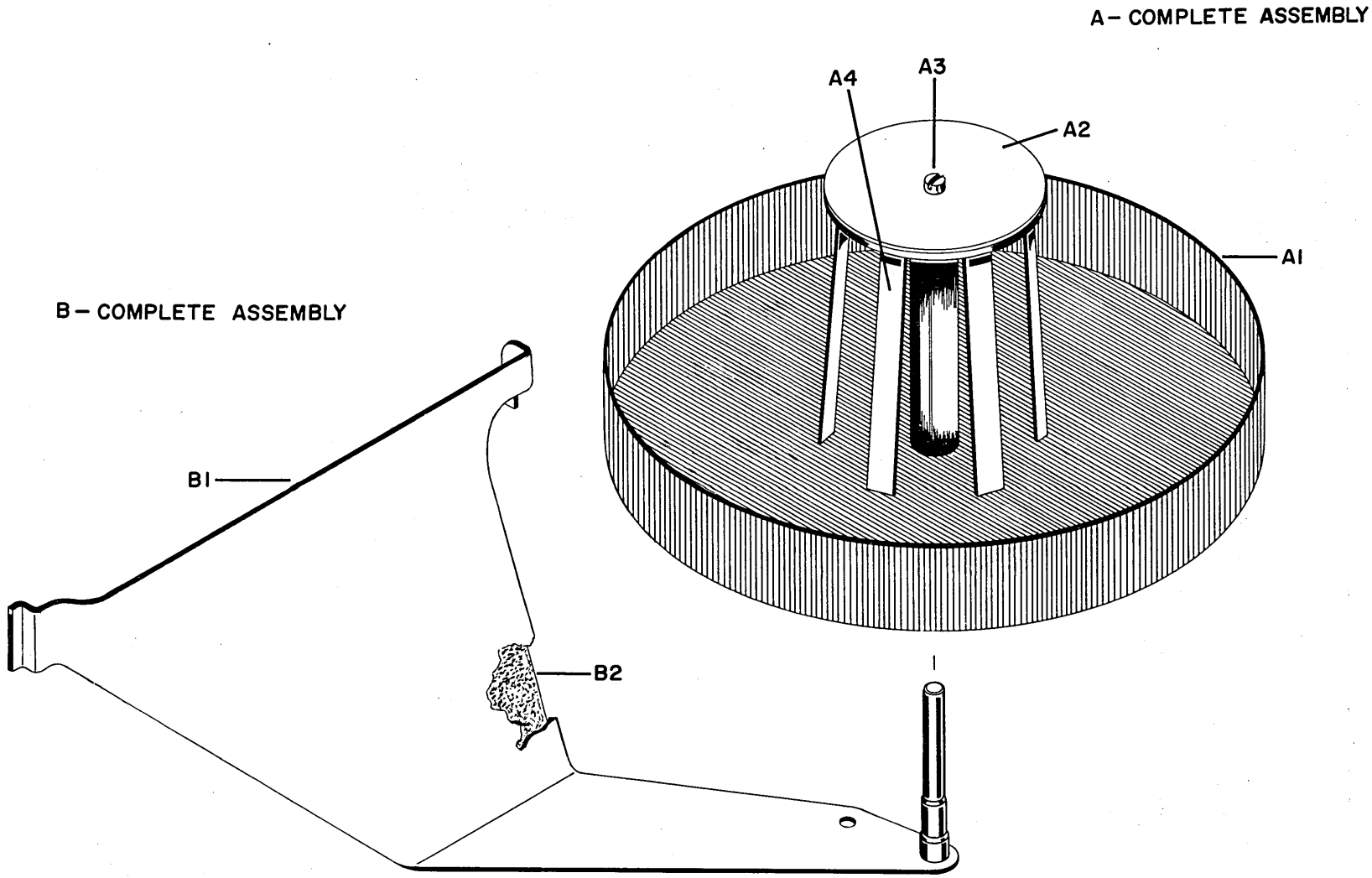

TAPE UNWIND SPOOL FOR SELECTADATA - FIGURE 9

Special Features

Ref. No.	Part No.	Part Name
A	1048185	Tape Unwind Spool Assembly (Specify Color)
A1	1048186	Unwind Spool Base (Specify Color)
A2	1040246	Tape Guide Support
A3	38351	Screw
A4	1040247	Tape Guide (Specify Color)
B	1049064	Unwind Reel Bracket Assembly (Specify Color)
B1	1049065	Unwind Reel Bracket (Specify Color)
B2	1049066	Sound-Deadener

LABEL HOLDER - FIGURE 10

Special Features

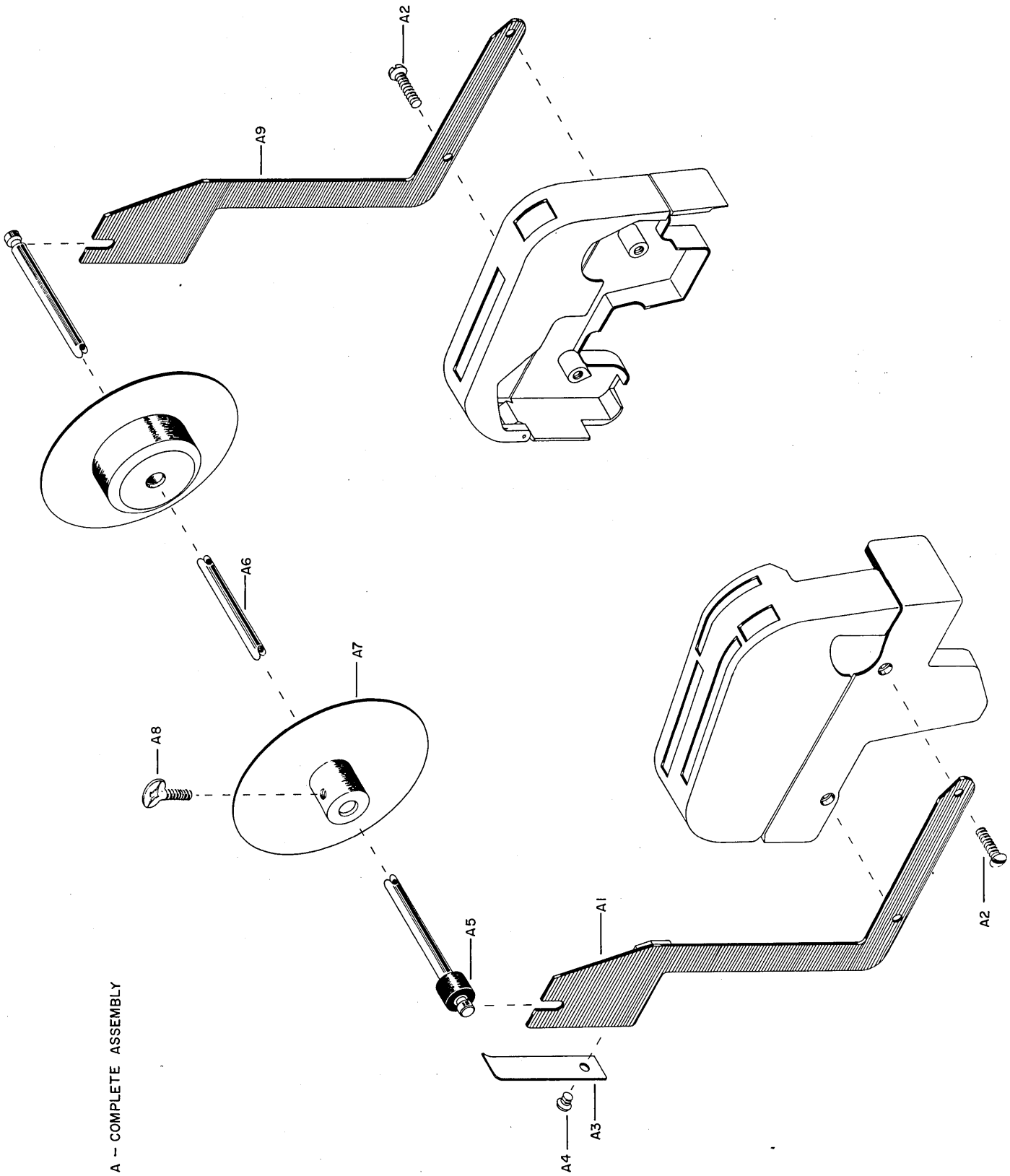

A - COMPLETE ASSEMBLY

LABEL HOLDER - FIGURE 10

Special Features

Ref. No.	Part No.	Part Name
A	1041577	12" Carriage Label Holder Assembly
A	1041578	16" Carriage Label Holder Assembly
A	1041579	20" Carriage Label Holder Assembly
A1	1041575	Left Hand Roll Holder Frame
A2	1055261	Screw
A3	1041566	Brake Spring
A4	1413	Screw to mount A3 to A1
A5	1041568	Roll Holder Brake
A6	1041571	12" Shaft
A6	1041572	16" Shaft
A6	1041572	20" Shaft
A7	1041565	Roll Holder Hub
A8	1041570	Thumb Screw
A9	1041576	Right Hand Roll Holder Frame