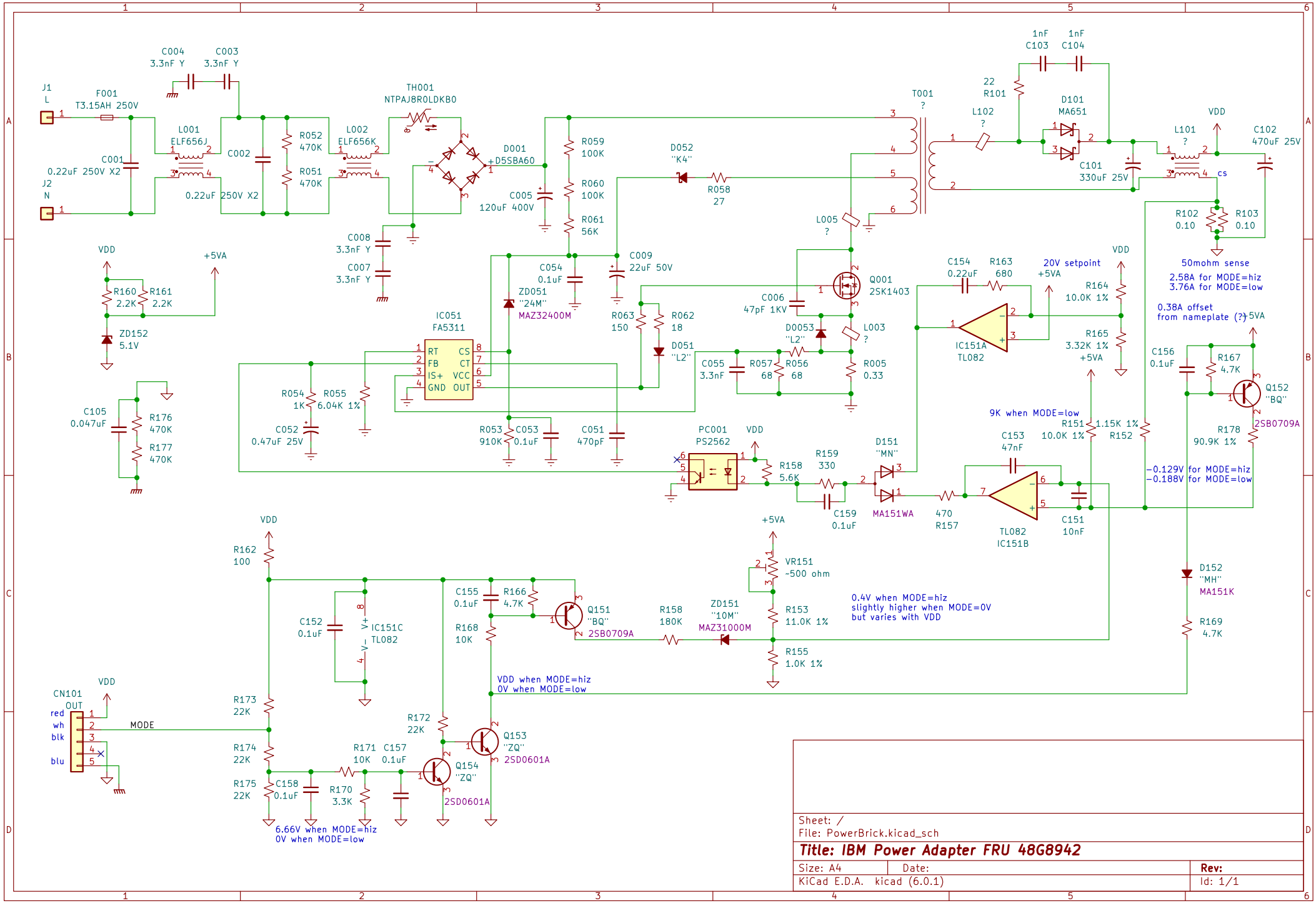

Sheet: /
File: PowerBrick.kicad_sch

Title: IBM Power Adapter FRU 48G8942

Size: A4	Date:	Rev:
KiCad E.D.A. kicad (6.0.1)		Id: 1/1