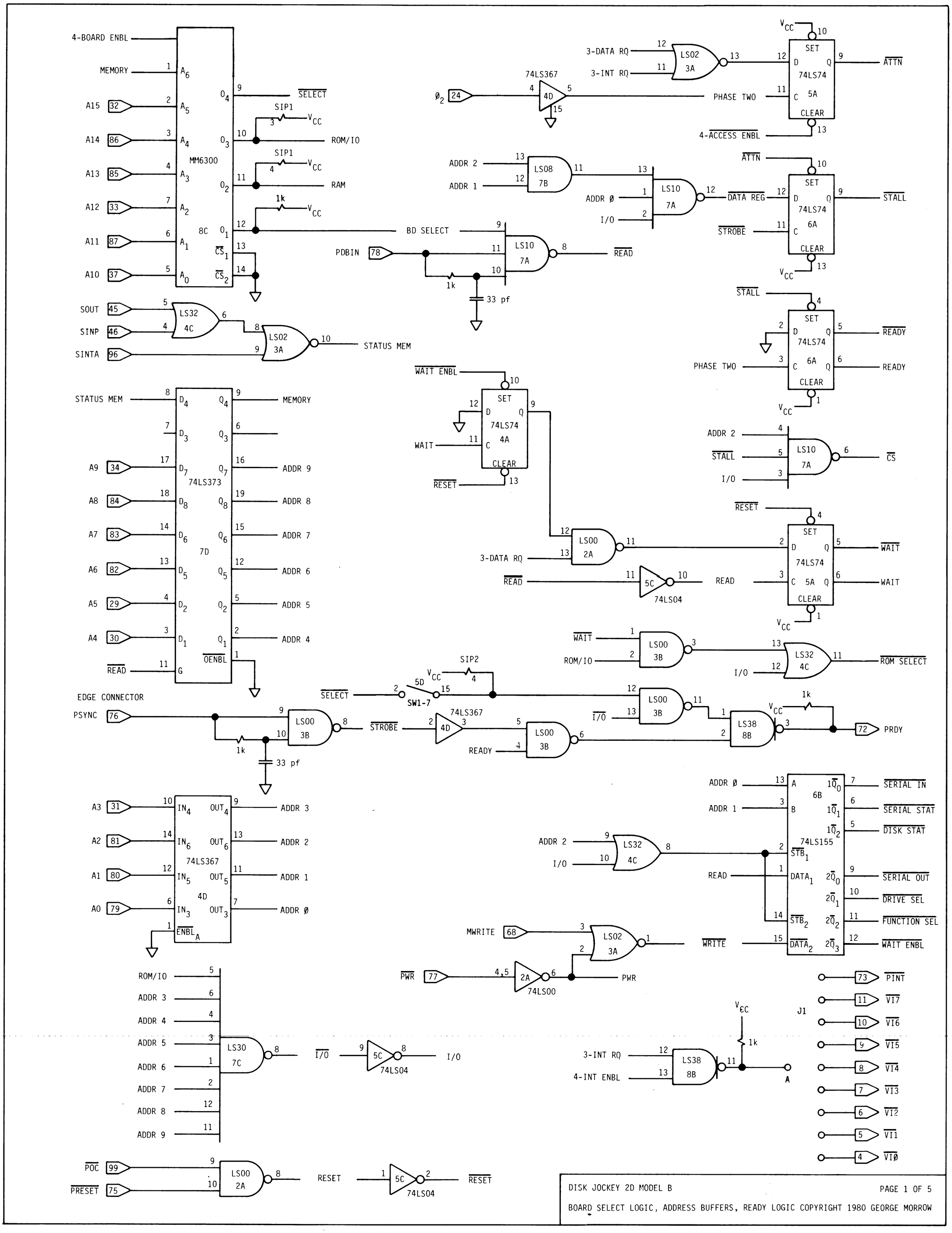

DISK JOCKEY 2D MODEL B

PAGE 1 OF 5

BOARD SELECT LOGIC, ADDRESS BUFFERS, READY LOGIC COPYRIGHT 1980 GEORGE MORROW

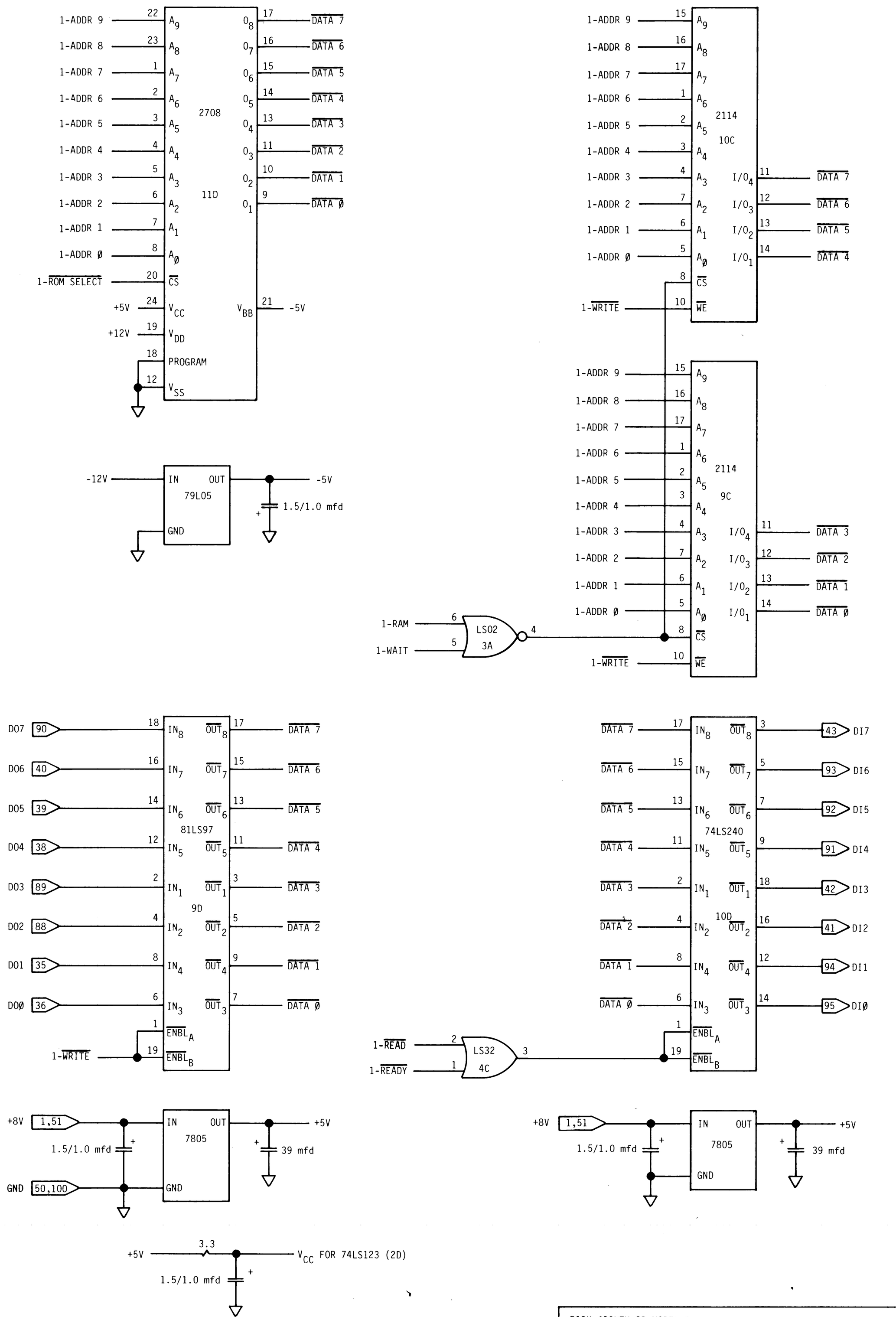

DISK JOCKEY 2D MODEL B

RAM, ROM, AND DATA BUFFERS

COPYRIGHT 1980 GEORGE MORROW

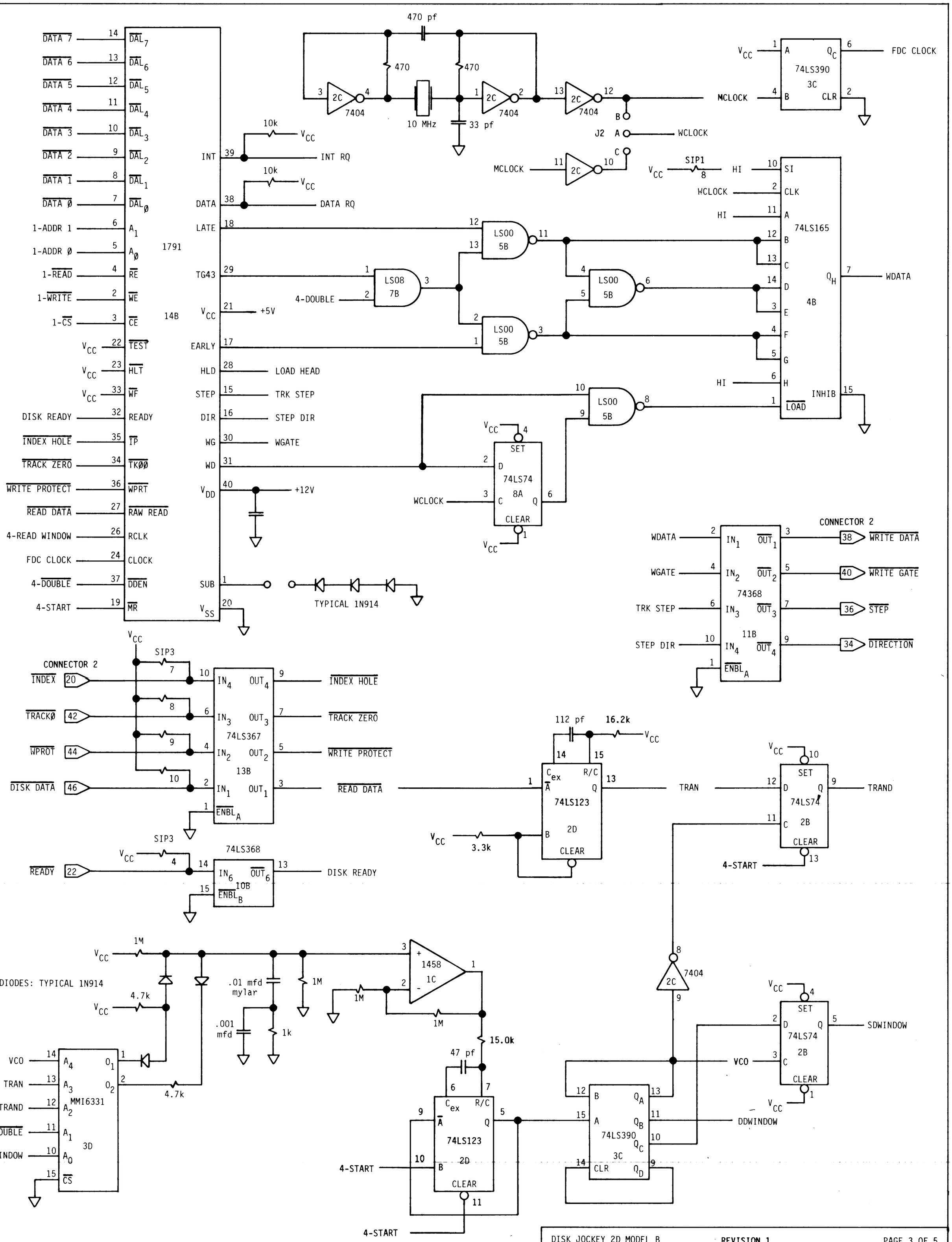

DISK JOCKEY 2D MODEL B — REVISION 1 — PAGE 3 OF 5

FDC CONTROLLER, SEPARATION & WRITE DATA LOGIC

COPYRIGHT 1980 GEORGE MORROW

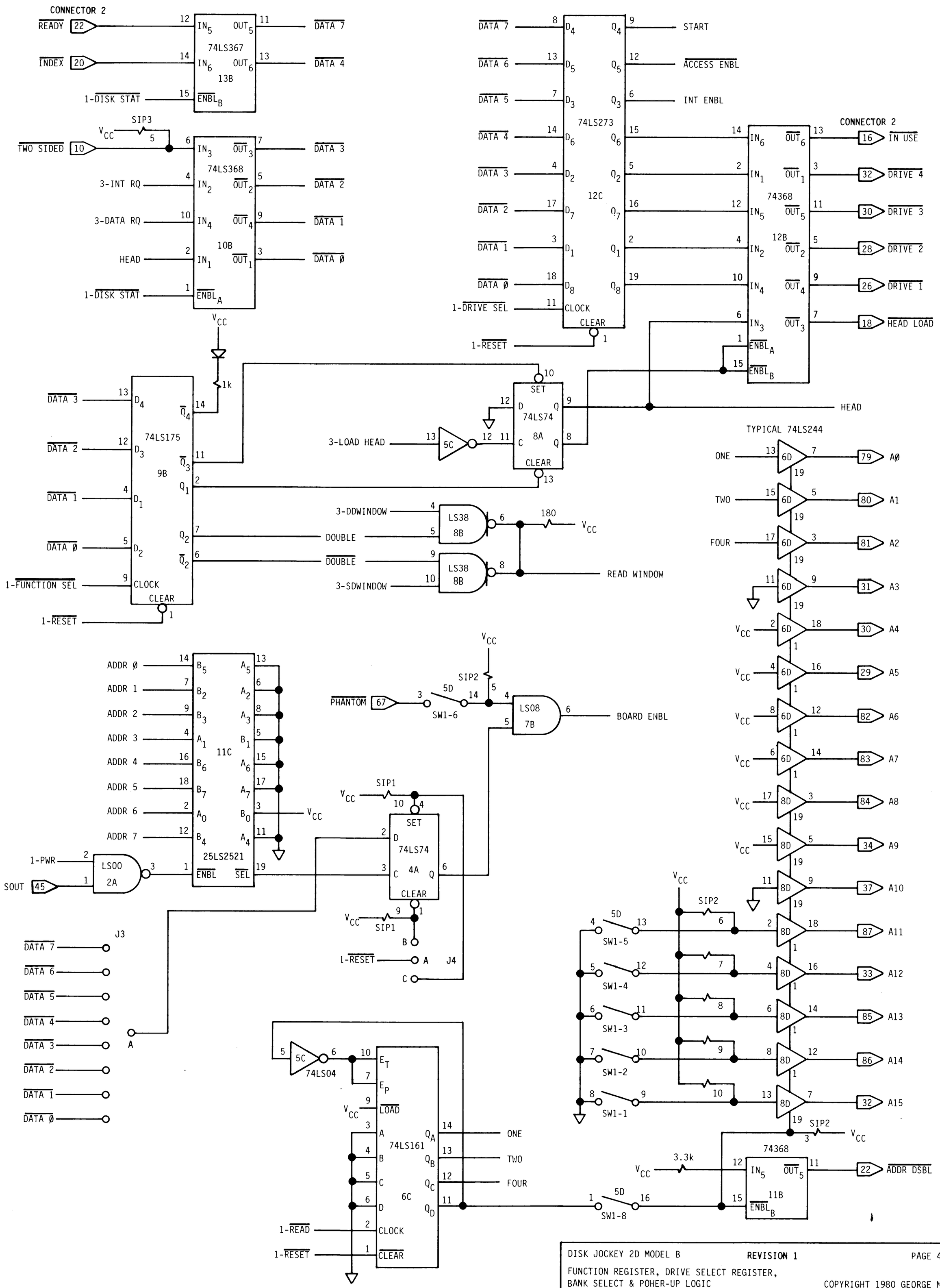

DISK JOCKEY 2D MODEL B **REVISION 1** PAGE 4 OF 5

FUNCTION REGISTER, DRIVE SELECT REGISTER,
BANK SELECT & POWER-UP LOGIC

COPYRIGHT 1980 GEORGE MORROW

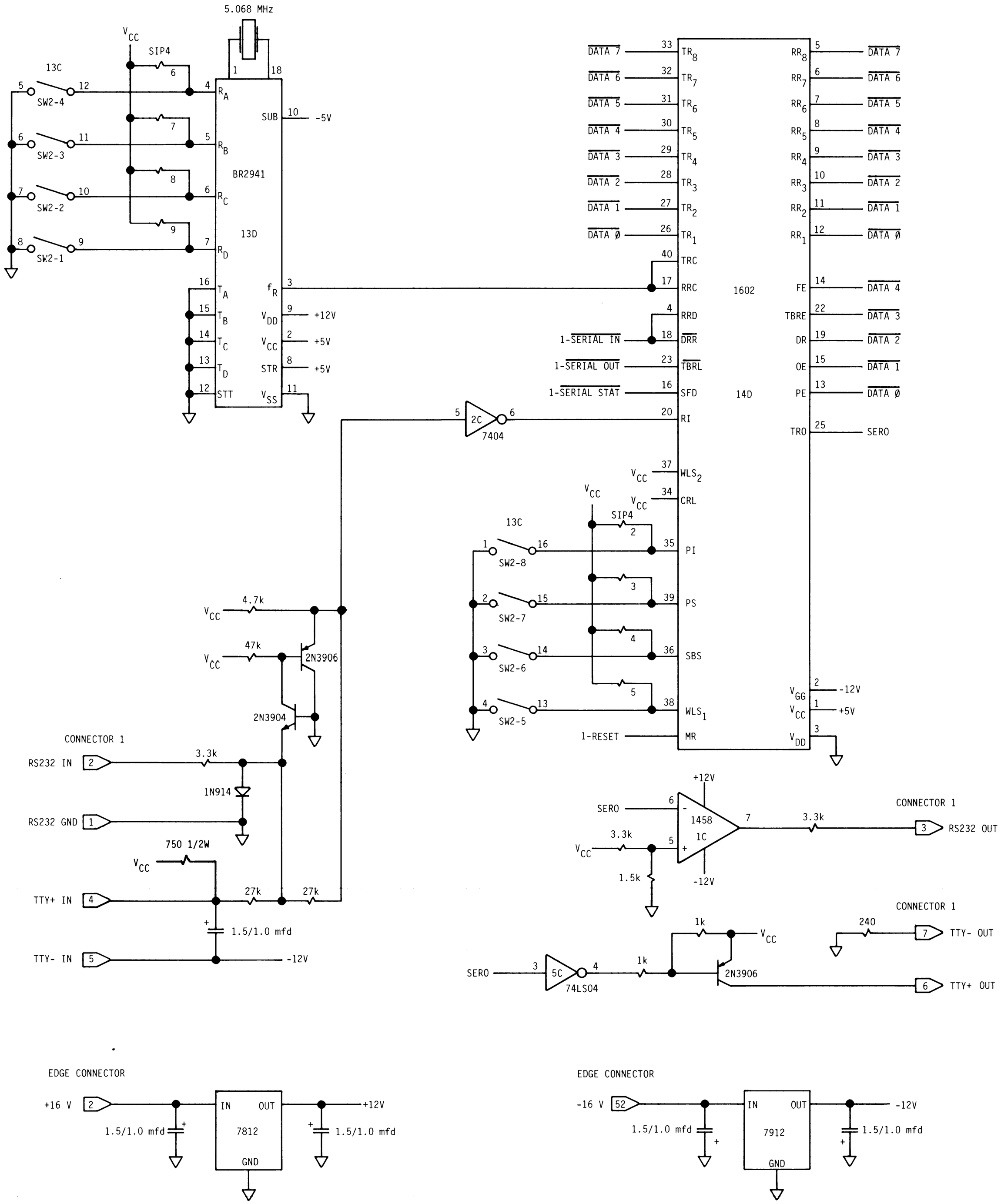

DISK JOCKEY 2D MODEL B — REVISION 1 — PAGE 5 OF 5

SERIAL INTERFACE LOGIC

COPYRIGHT 1980 GEORGE MORROW