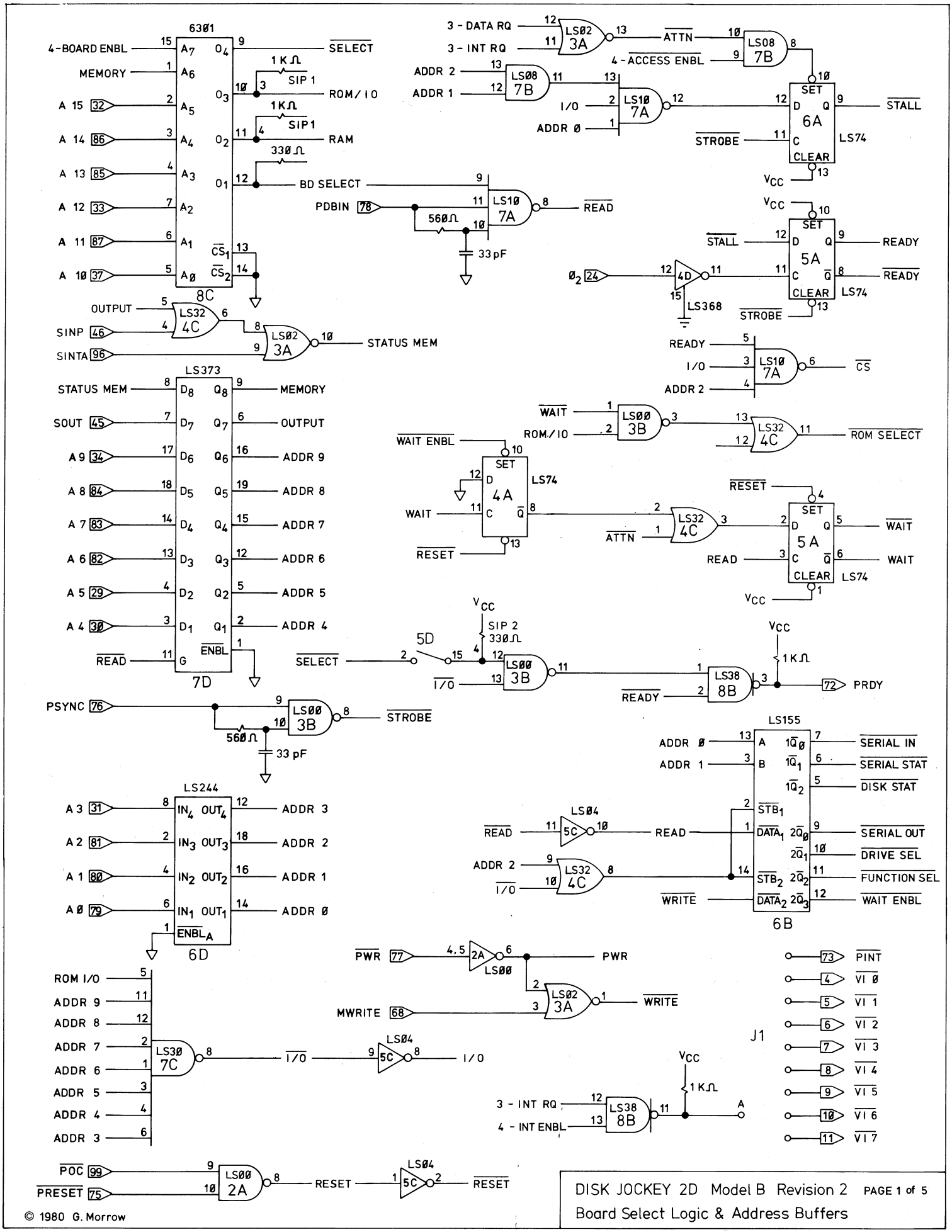
6301
8C
4-BOARD ENBL
MEMORY
A 15 32
A 14 86
A 13 85
A 12 33
A 11 87
A 10 37
SELECT
1 KΩ
SIP 1
ROM/IO
RAM
330Ω
BD SELECT
PDBIN 78
560Ω
33 pF
LS10 7A
READ
OUTPUT
SINP 46
SINTA 96
LS32 4C
LS02 3A
STATUS MEM
LS373
7D
STATUS MEM
SOUT 45
A 9 34
A 8 84
A 7 83
A 6 82
A 5 29
A 4 30
READ
MEMORY
OUTPUT
ADDR 9
ADDR 8
ADDR 7
ADDR 6
ADDR 5
ADDR 4
PSYNC 76
LS00 3B
STROBE
LS244
6D
A 3 31
A 2 81
A 1 80
A 0 79
ADDR 3
ADDR 2
ADDR 1
ADDR 0
3 - DATA RQ
3 - INT RQ
LS02 3A
ATTN
4 - ACCESS ENBL
LS08 7B
ADDR 2
ADDR 1
I/O
ADDR 0
LS10 7A
STROBE
6A
LS74
STALL
VCC
5A
READY
READY
Ø2 24
4D
LS368
STROBE
READY
I/O
ADDR 2
LS10 7A
CS
WAIT
ROM/IO
LS00 3B
LS32 4C
ROM SELECT
WAIT ENBL
4A
WAIT
RESET
ATTN
LS32 4C
RESET
5A
WAIT
READ
WAIT
5D
SIP 2
330Ω
SELECT
I/O
LS00 3B
LS38 8B
READY
1 KΩ
PRDY
LS155
6B
ADDR 0
ADDR 1
SERIAL IN
SERIAL STAT
DISK STAT
LS04
5C
READ
ADDR 2
I/O
LS32 4C
WRITE
SERIAL OUT
DRIVE SEL
FUNCTION SEL
WAIT ENBL
PWR 77
2A
LS00
PWR
MWRITE 68
LS02 3A
WRITE
J1
PINT
VI 0
VI 1
VI 2
VI 3
VI 4
VI 5
VI 6
VI 7
ROM I/O
ADDR 9
ADDR 8
ADDR 7
ADDR 6
ADDR 5
ADDR 4
ADDR 3
LS30 7C
I/O
LS04 5C
I/O
3 - INT RQ
4 - INT ENBL
LS38 8B
1 KΩ
A
POC 99
PRESET 75
LS00 2A
RESET
LS04 5C
RESET
© 1980 G. Morrow
DISK JOCKEY 2D Model B Revision 2
PAGE 1 of 5
Board Select Logic & Address Buffers

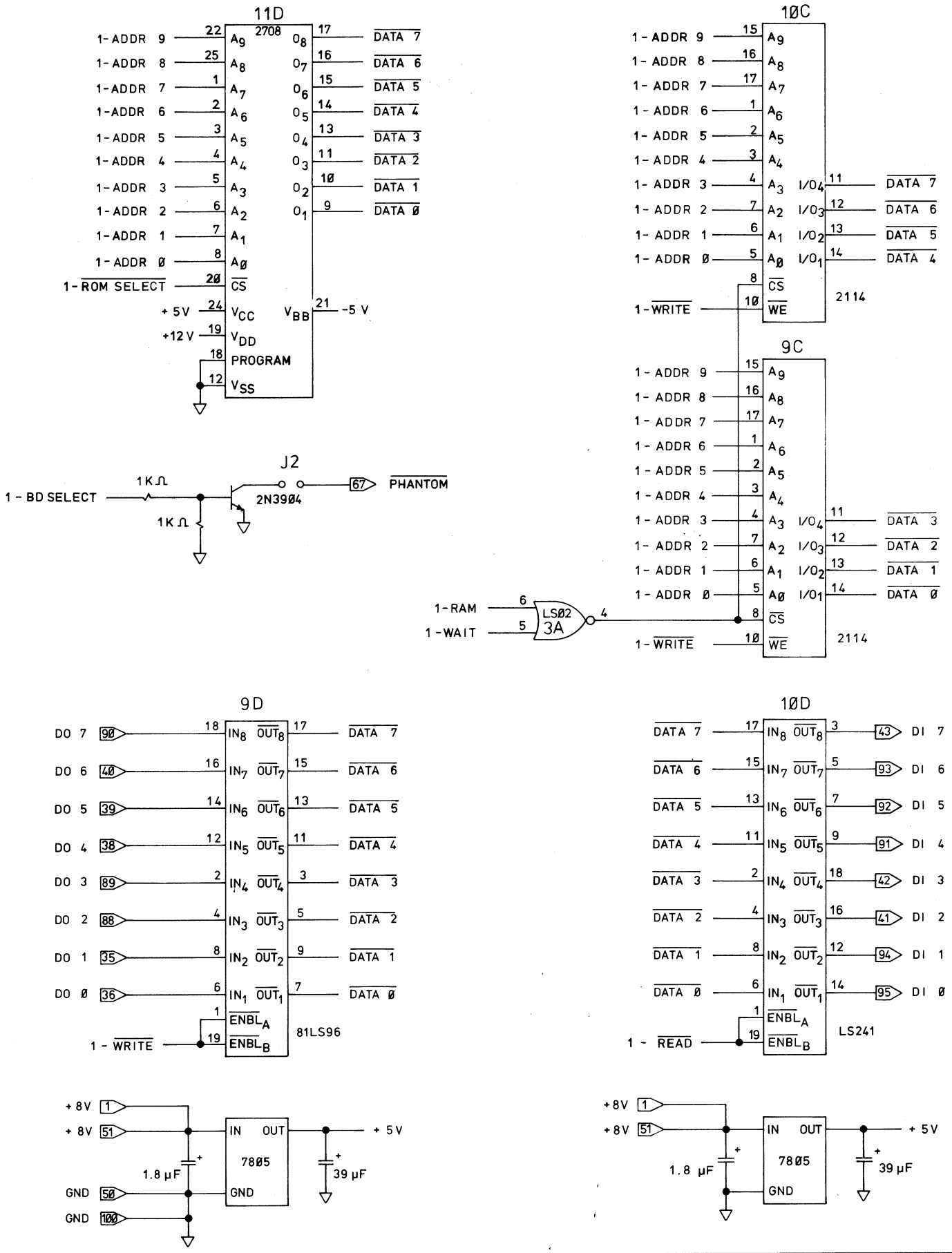

DISK JOCKEY 2D Model B Revision 2 PAGE 2 of 5

RAM, ROM, & Data Buffers

©1980 G. Morrow

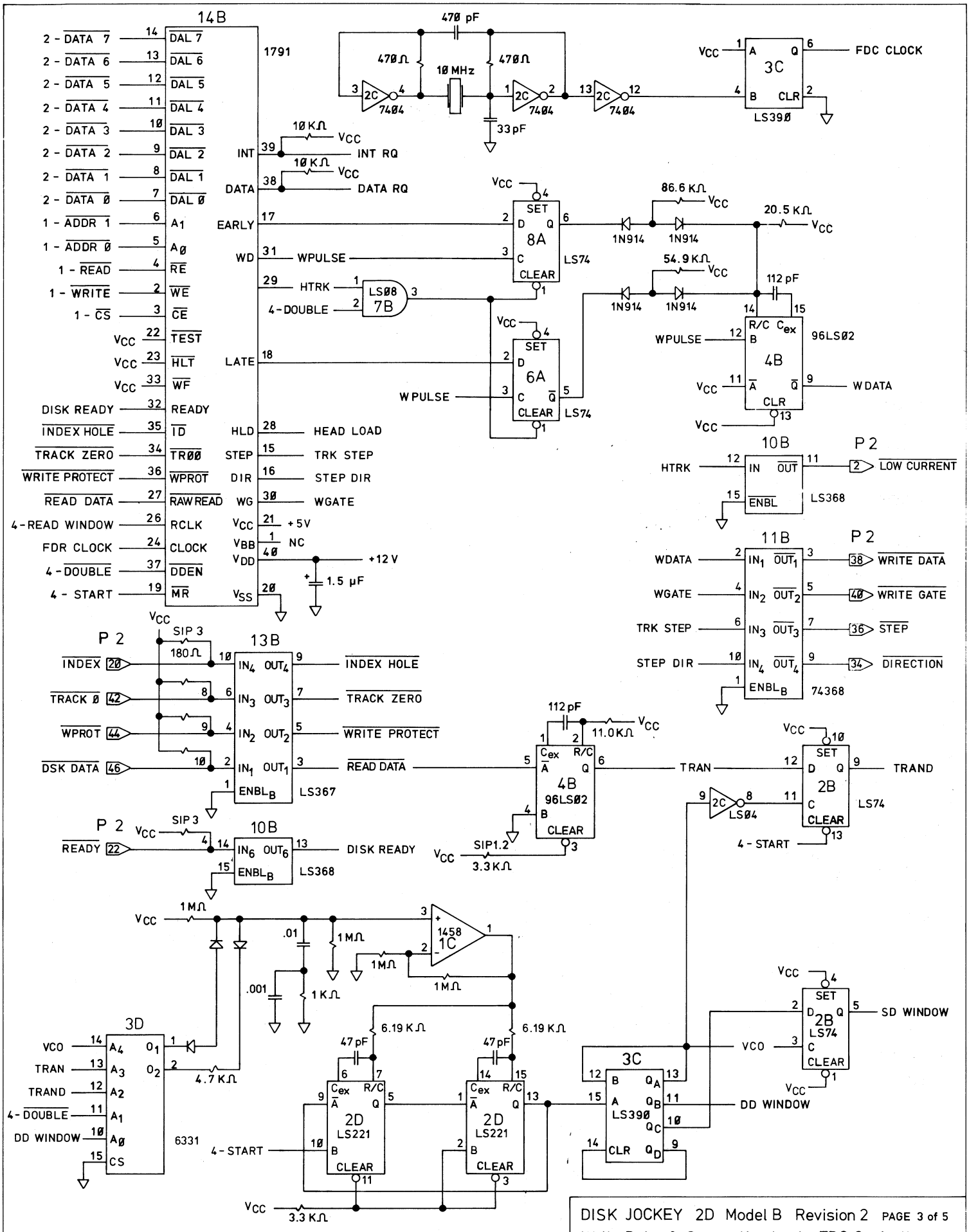
14B
1791
2 - DATA 7
2 - DATA 6
2 - DATA 5
2 - DATA 4
2 - DATA 3
2 - DATA 2
2 - DATA 1
2 - DATA 0
1 - ADDR 1
1 - ADDR 0
1 - READ
1 - WRITE
1 - CS
DISK READY
INDEX HOLE
TRACK ZERO
WRITE PROTECT
READ DATA
4 - READ WINDOW
FDR CLOCK
4 - DOUBLE
4 - START
INT
INT RQ
DATA
DATA RQ
EARLY
WD
WPULSE
HTRK
4 - DOUBLE
LATE
HLD
HEAD LOAD
STEP
TRK STEP
DIR
STEP DIR
WG
WGATE
+5V
NC
+12 V
1.5 µF
470 pF
470Ω
10 MHz
33 pF
7404
FDC CLOCK
3C
LS390
8A
LS74
6A
LS08
7B
86.6 KΩ
20.5 KΩ
54.9 KΩ
112 pF
1N914
4B
96LS02
WDATA
10B
LS368
P 2
LOW CURRENT
11B
74368
WRITE DATA
WRITE GATE
STEP
DIRECTION
13B
LS367
SIP 3
180Ω
INDEX
TRACK 0
WPROT
DSK DATA
INDEX HOLE
TRACK ZERO
WRITE PROTECT
READ DATA
11.0 KΩ
TRAN
TRAND
2B
LS04
SIP1.2
3.3 KΩ
READY
DISK READY
1 MΩ
1458
1C
.01
.001
1 KΩ
6.19 KΩ
47 pF
2D
LS221
4.7 KΩ
3D
6331
VCO
DD WINDOW
SD WINDOW
LS390
3.3 KΩ
©1980 G. Morrow
DISK JOCKEY 2D Model B Revision 2 PAGE 3 of 5
Write Data & Separation Logic, FDC Controller

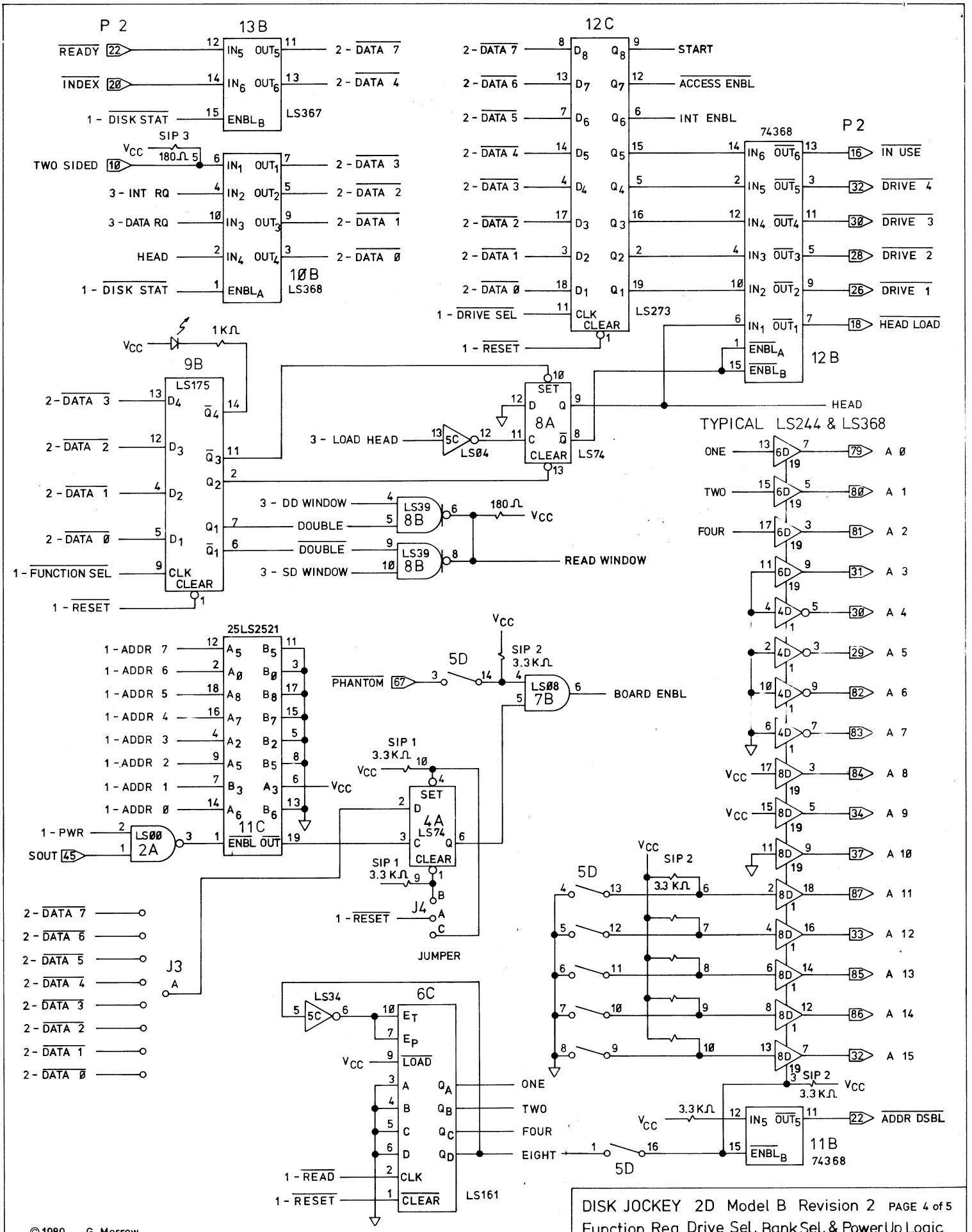

DISK JOCKEY 2D Model B Revision 2 PAGE 4 of 5

Function Reg. Drive Sel, Bank Sel, & PowerUp Logic

©1980 G. Morrow

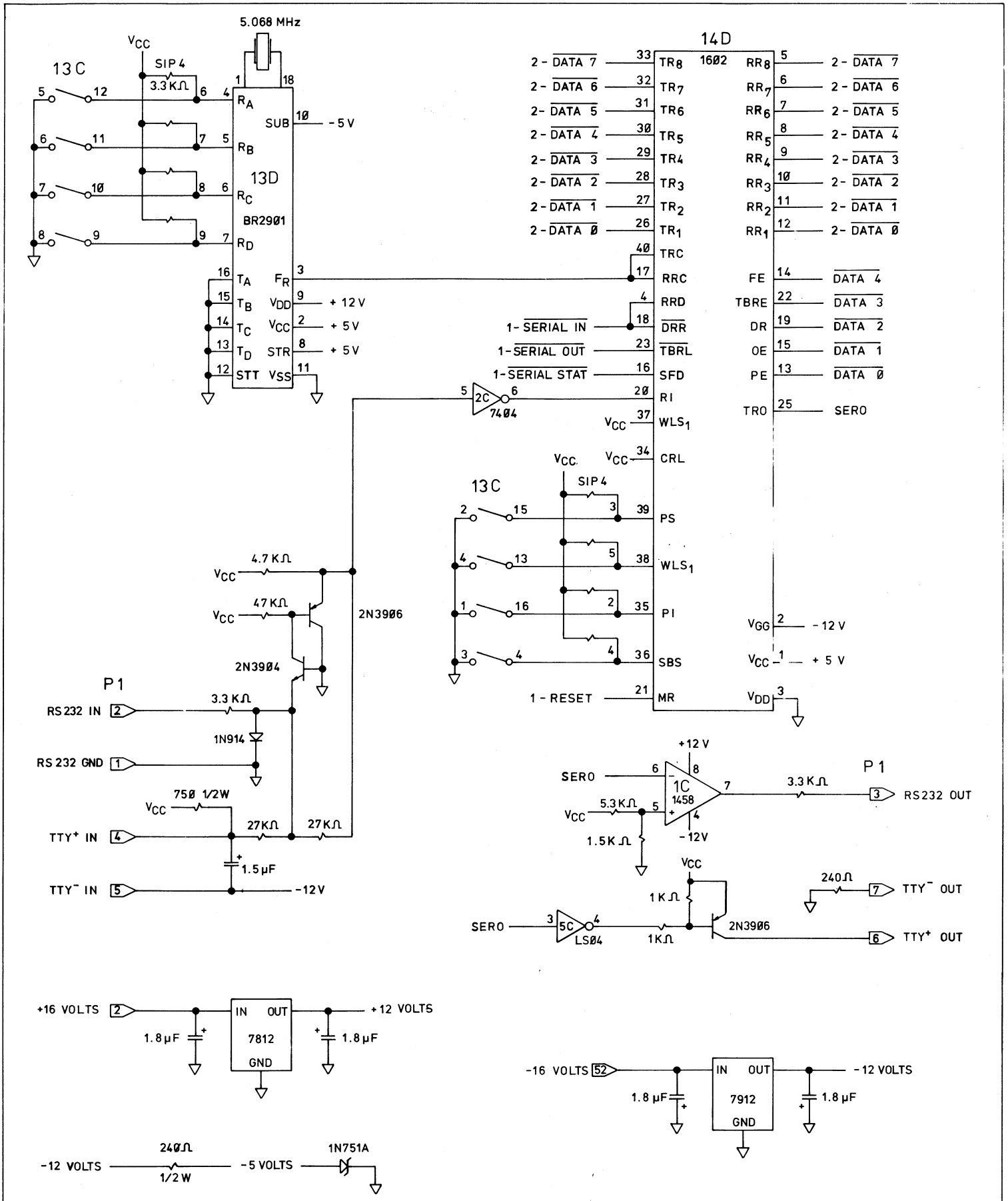

DISK JOCKEY 2D Model B Revision 2 PAGE 5 of 5
Serial Interface Logic

©1980 G. Morrow