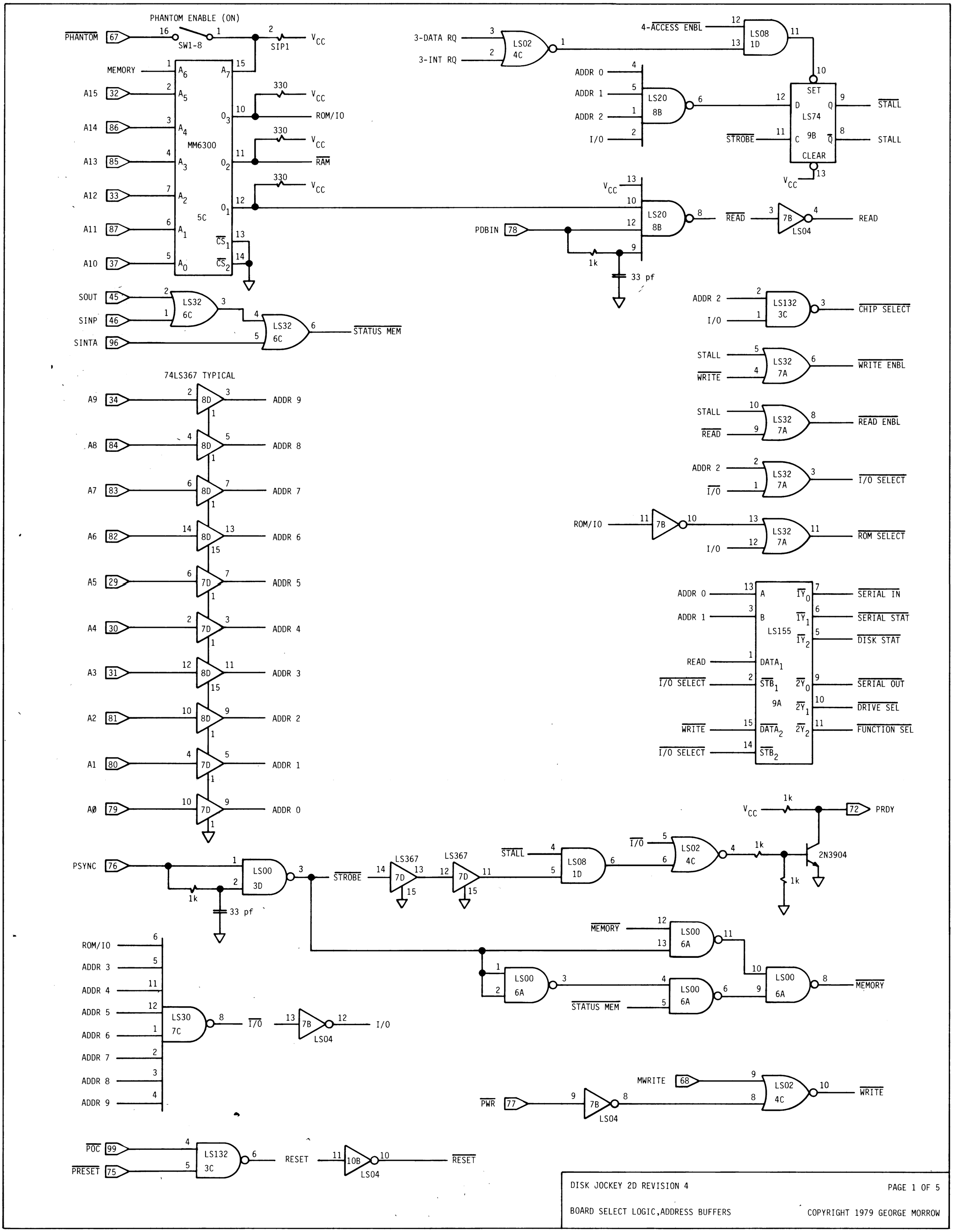

DISK JOCKEY 2D REVISION 4

PAGE 1 OF 5

BOARD SELECT LOGIC,ADDRESS BUFFERS

COPYRIGHT 1979 GEORGE MORROW

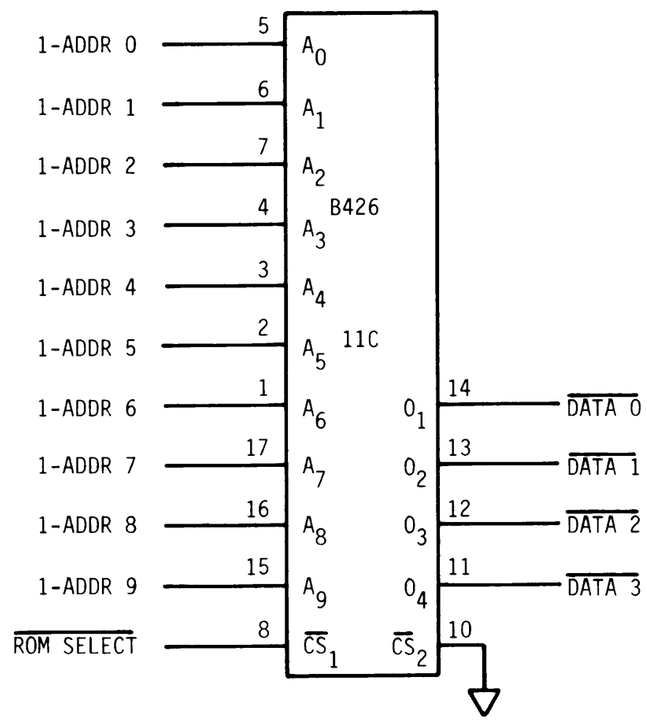

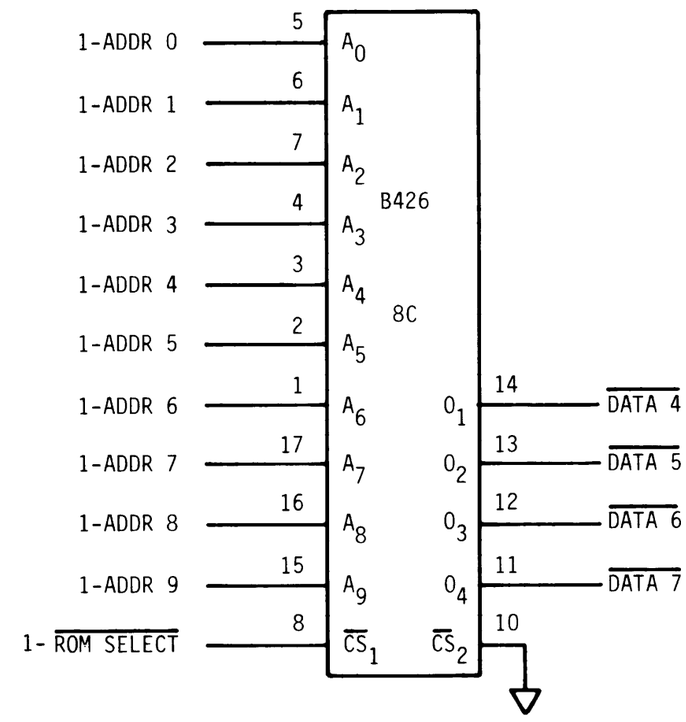

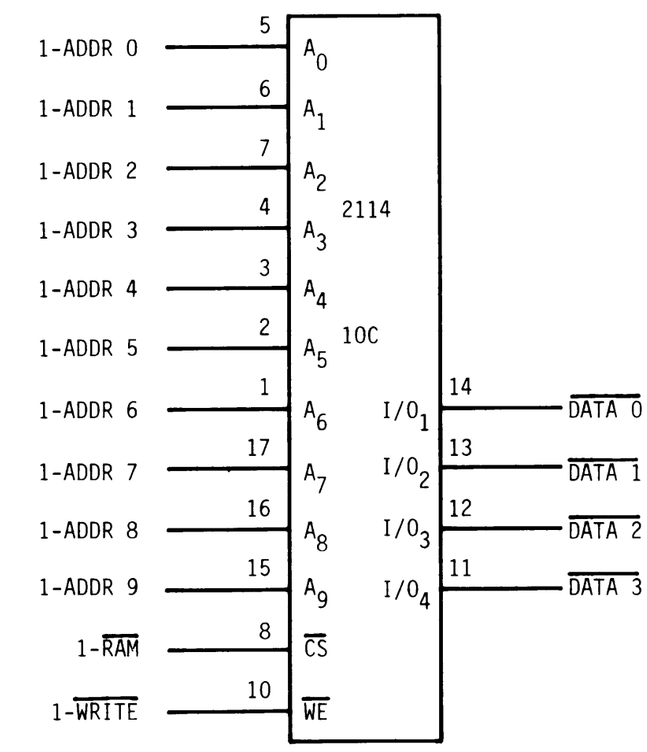

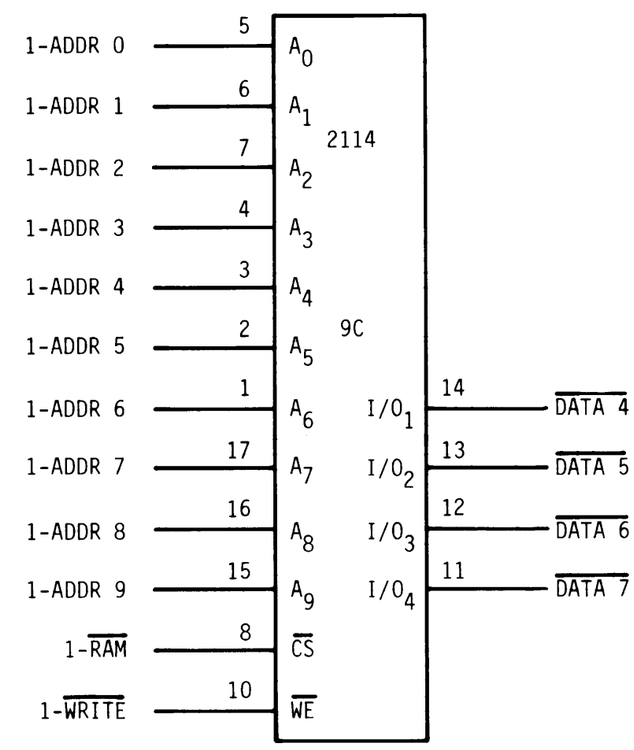

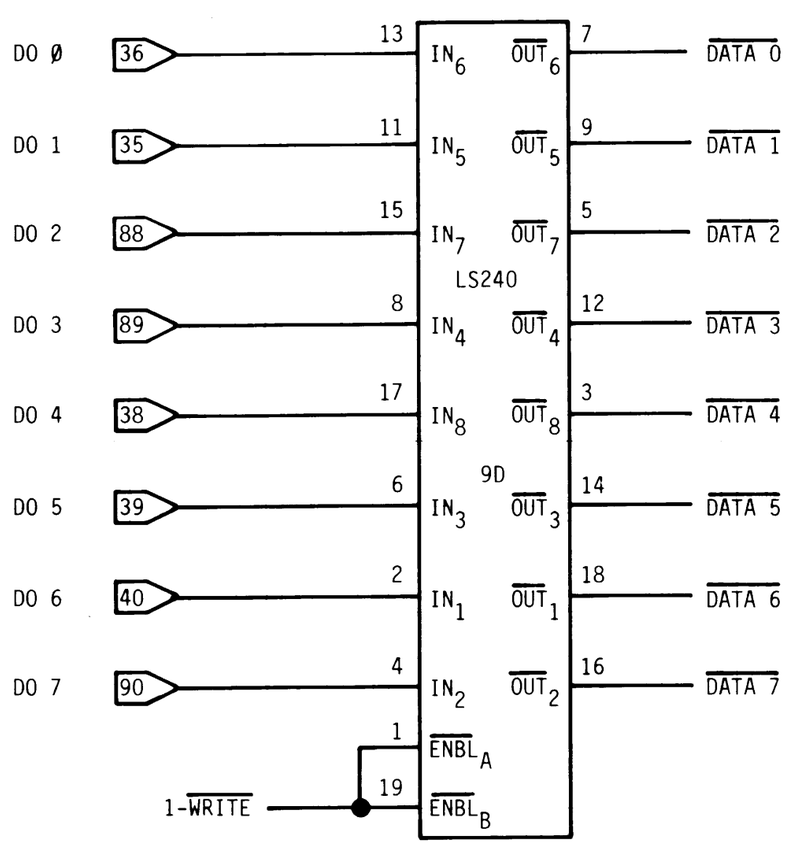

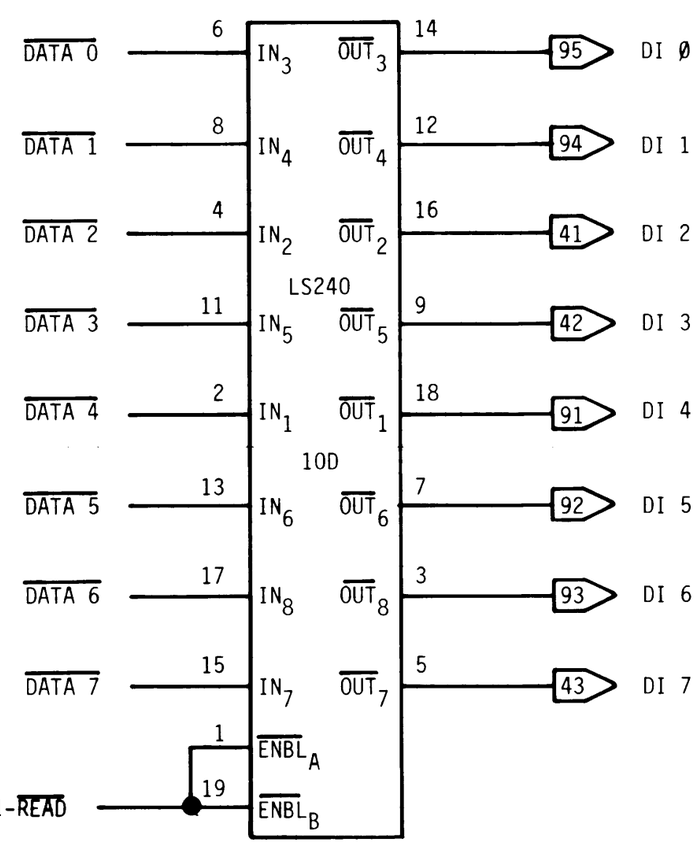

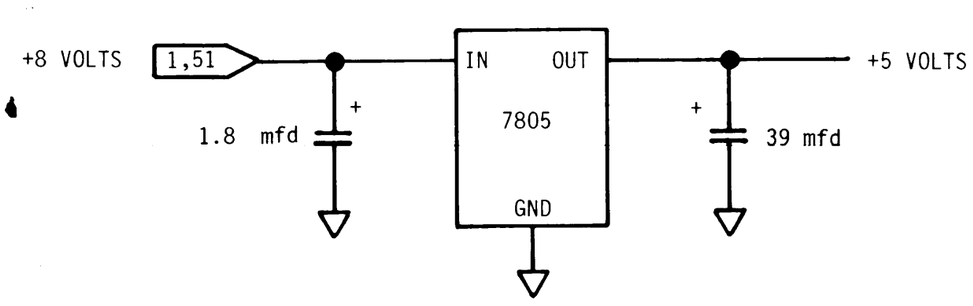

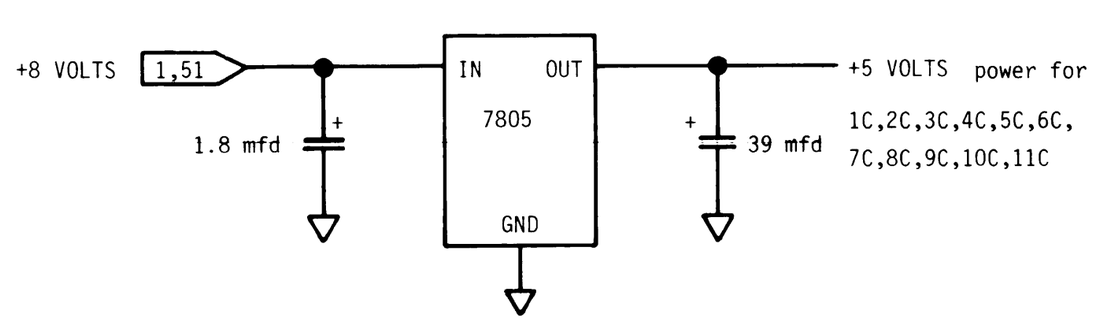

DISK JOCKEY 2D **REVISION 4** PAGE 2 OF 5

RAM, ROM, AND DATA BUFFERS

COPYRIGHT 1979 GEORGE MORROW

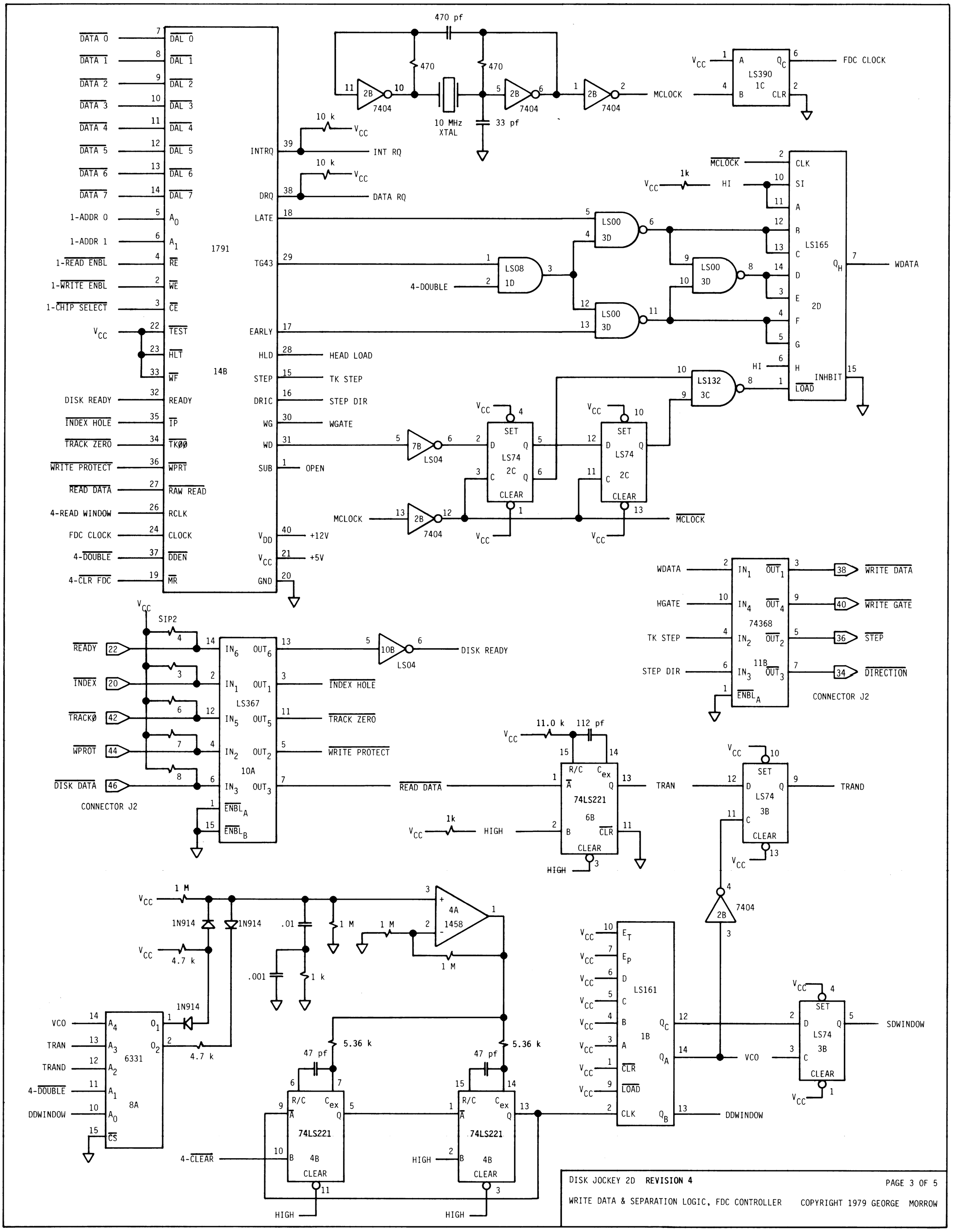

DISK JOCKEY 2D **REVISION 4**

PAGE 3 OF 5

WRITE DATA & SEPARATION LOGIC, FDC CONTROLLER

COPYRIGHT 1979 GEORGE MORROW

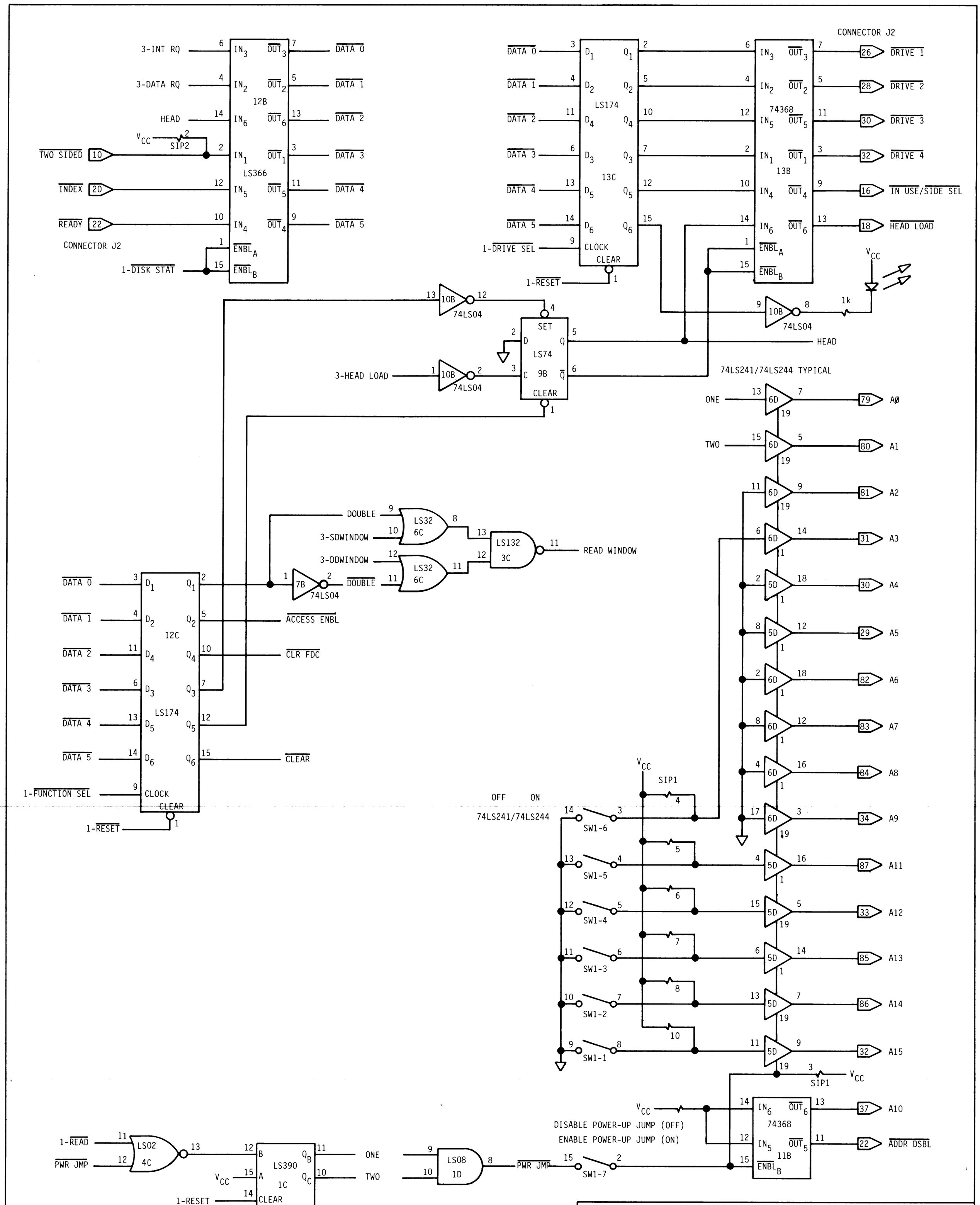

DISK JOCKEY 2D REVISION 4

FUNCTION REGISTER,DRIVE SELECT & POWER-UP JUMP LOGIC

PAGE 4 OF 5

COPYRIGHT 1979

GEORGE MORROW

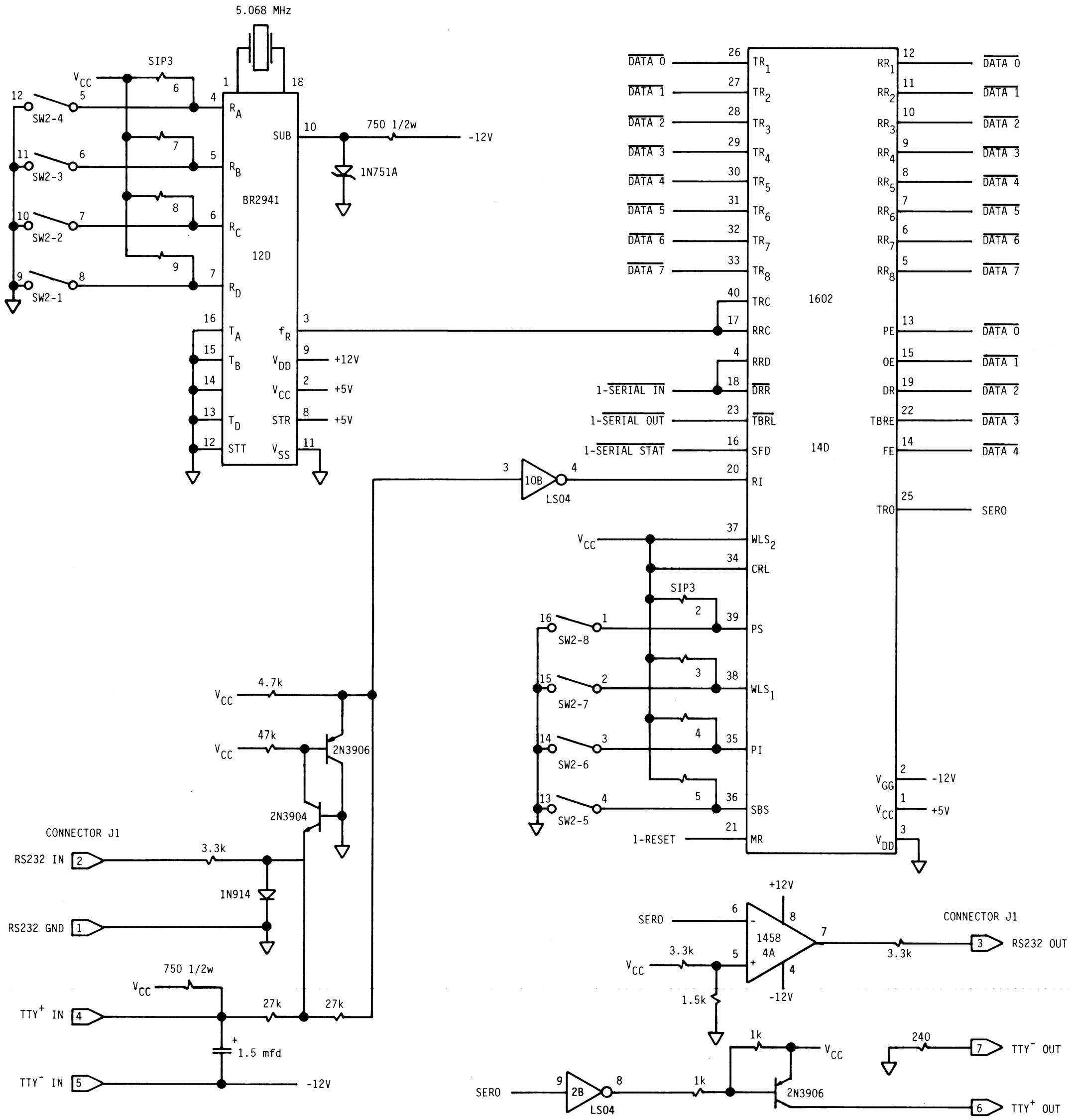

DISK JOCKEY 2D **REVISION 4**

PAGE 5 OF 5

SERIAL INTERFACE LOGIC

COPYRIGHT 1979 GEORGE MORROW