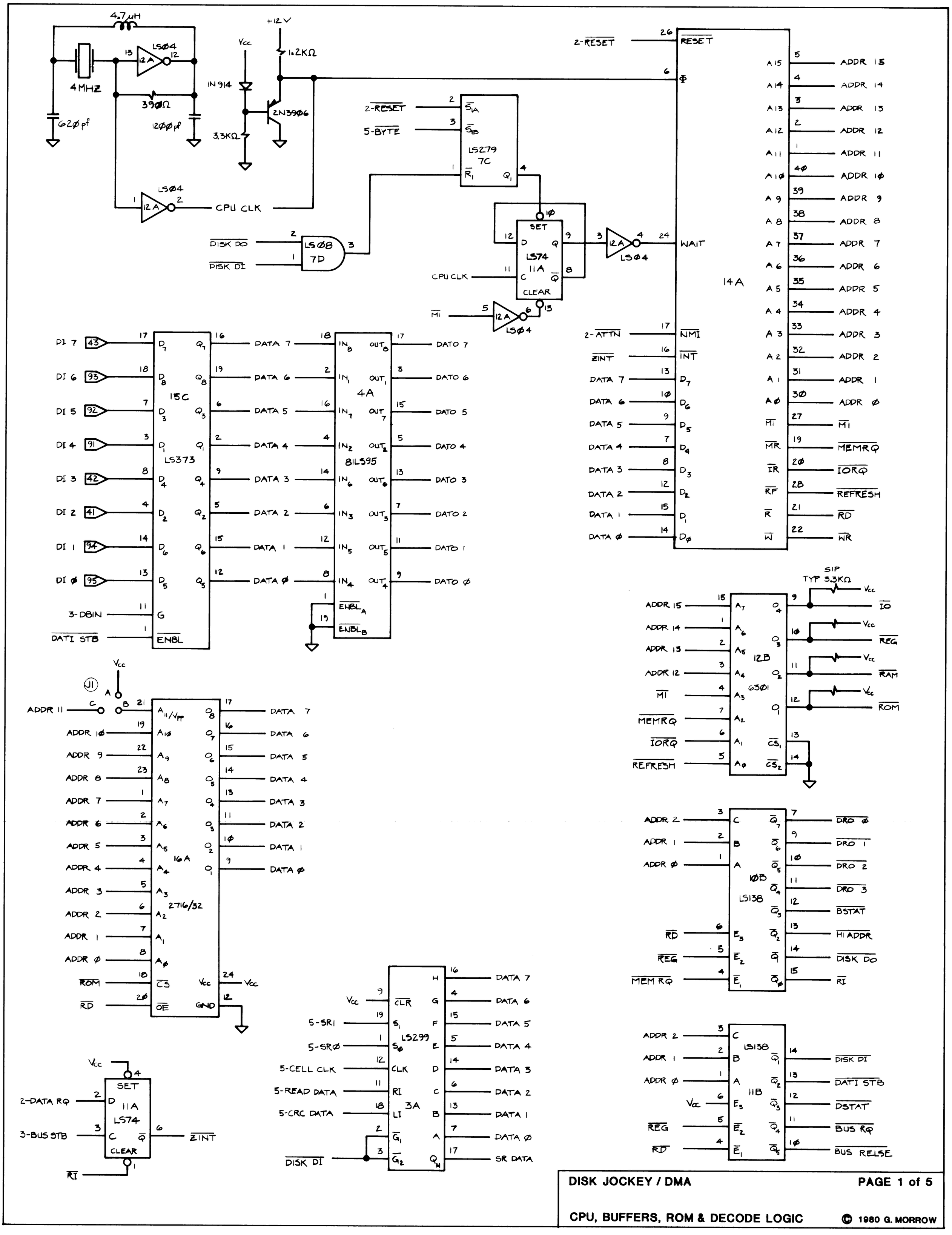

DISK JOCKEY / DMA **PAGE 1 of 5**

CPU, BUFFERS, ROM & DECODE LOGIC © 1980 G. MORROW

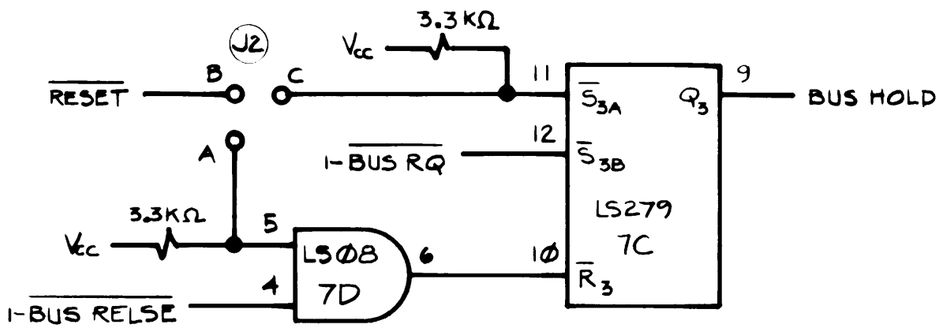

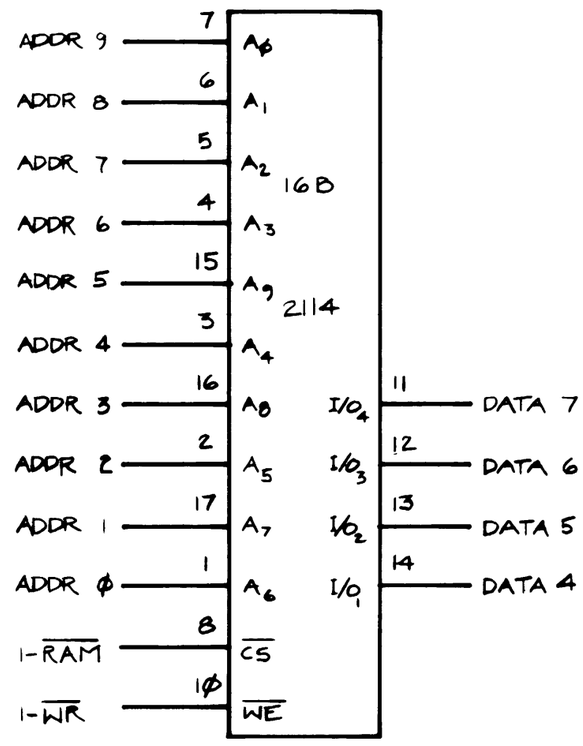

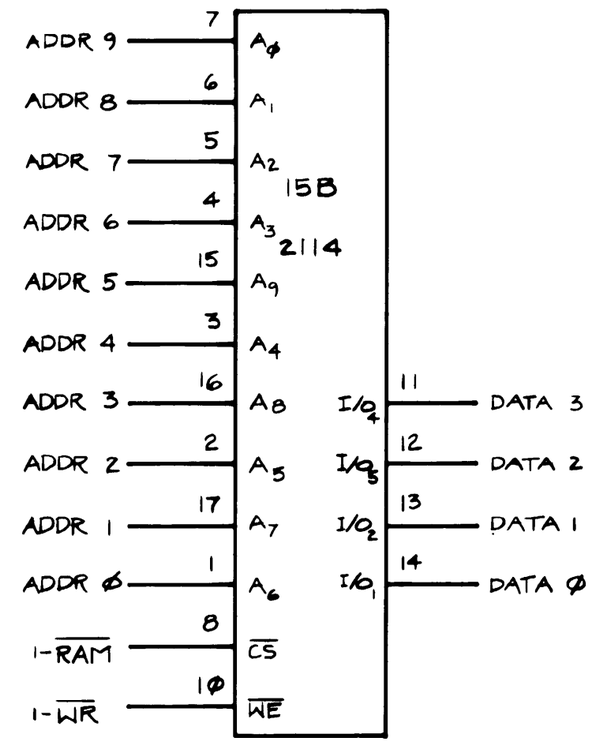

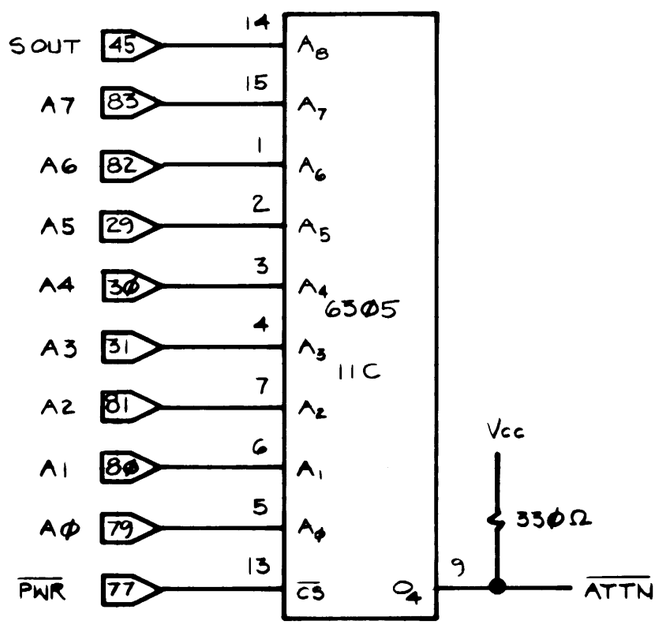

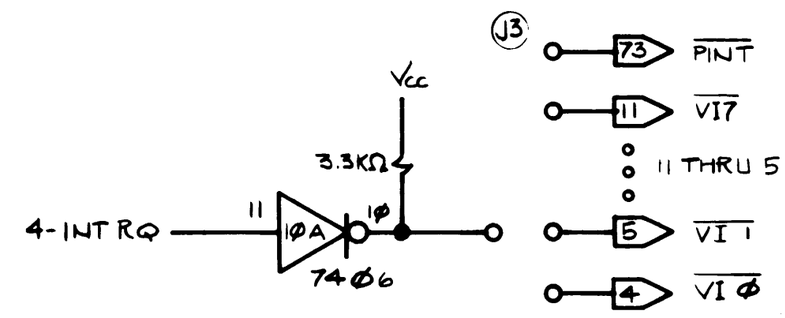

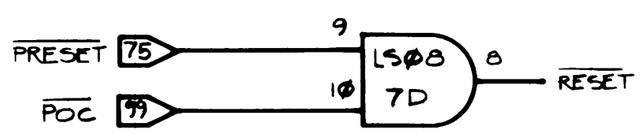

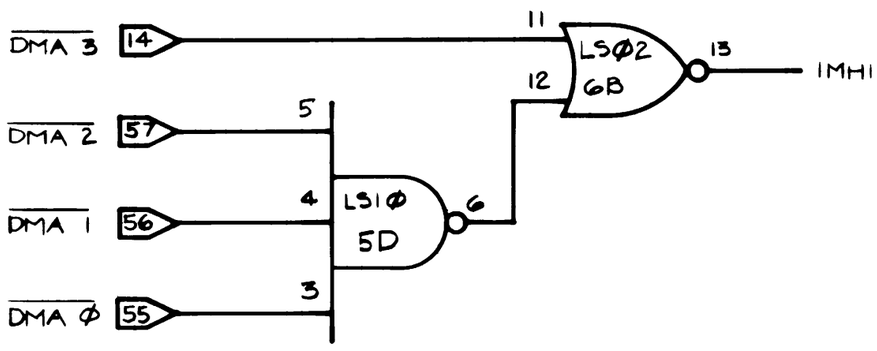

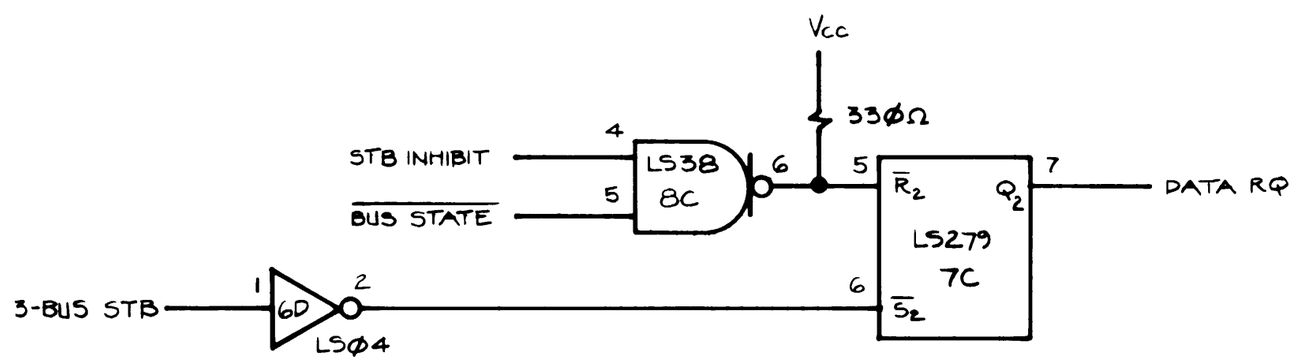

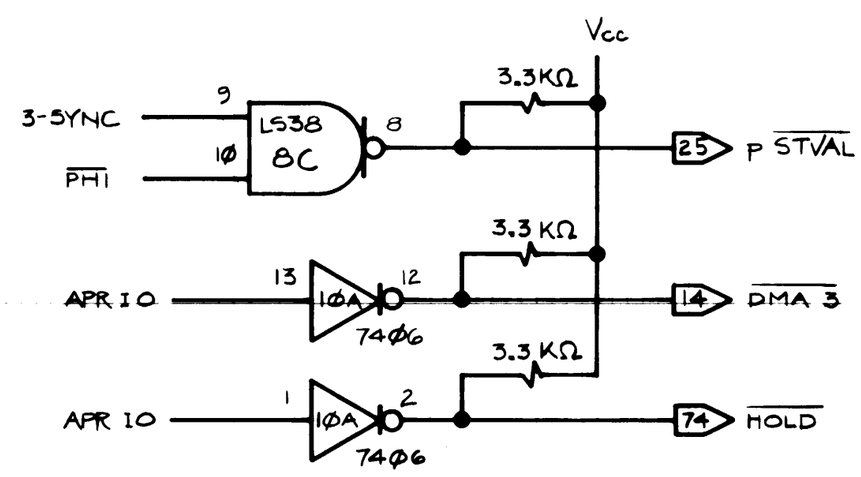

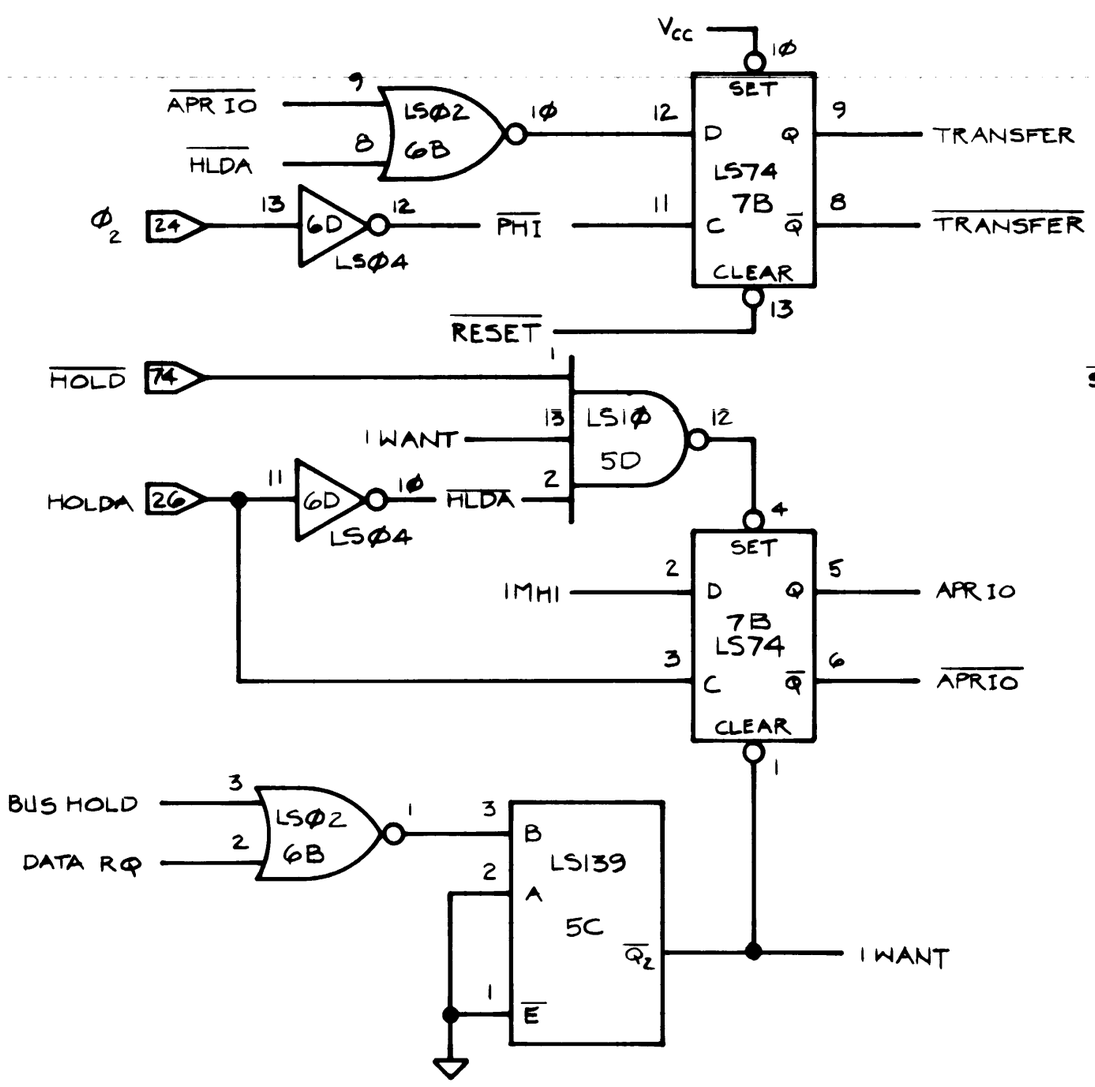

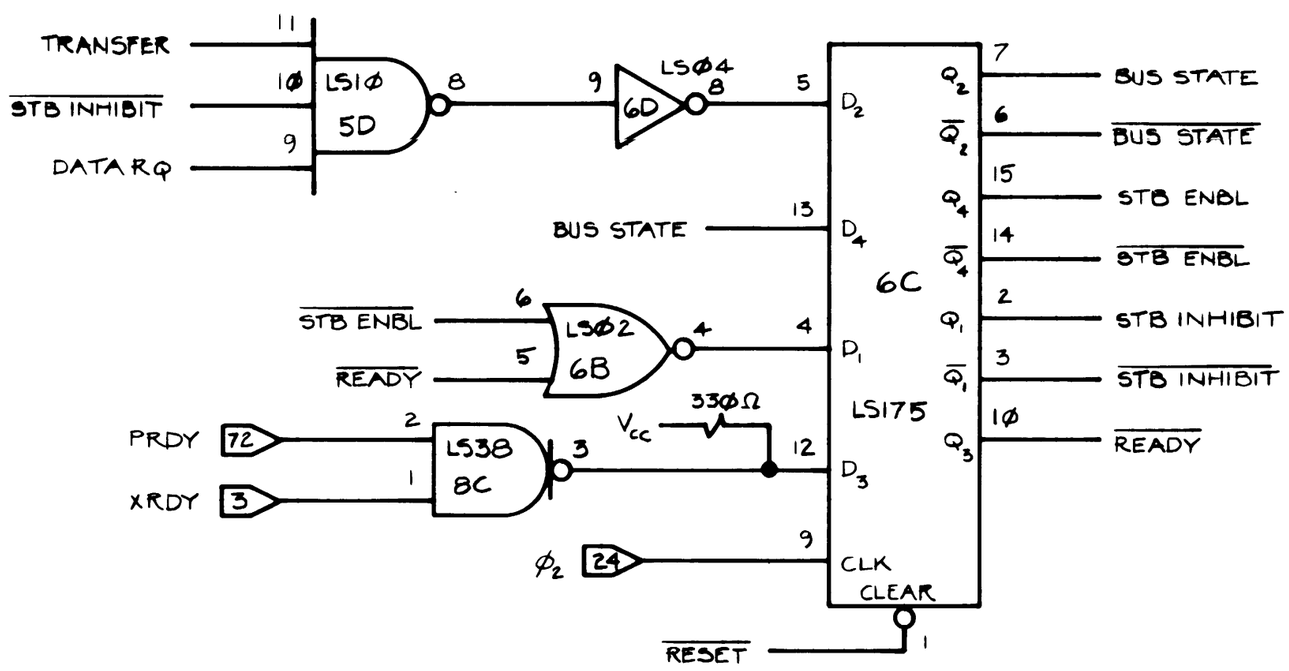

DISK JOCKEY / DMA **PAGE 2 of 5**

BUS CONTROL LOGIC, BOOTSTRAP, I/O

© 1980 G. MORROW

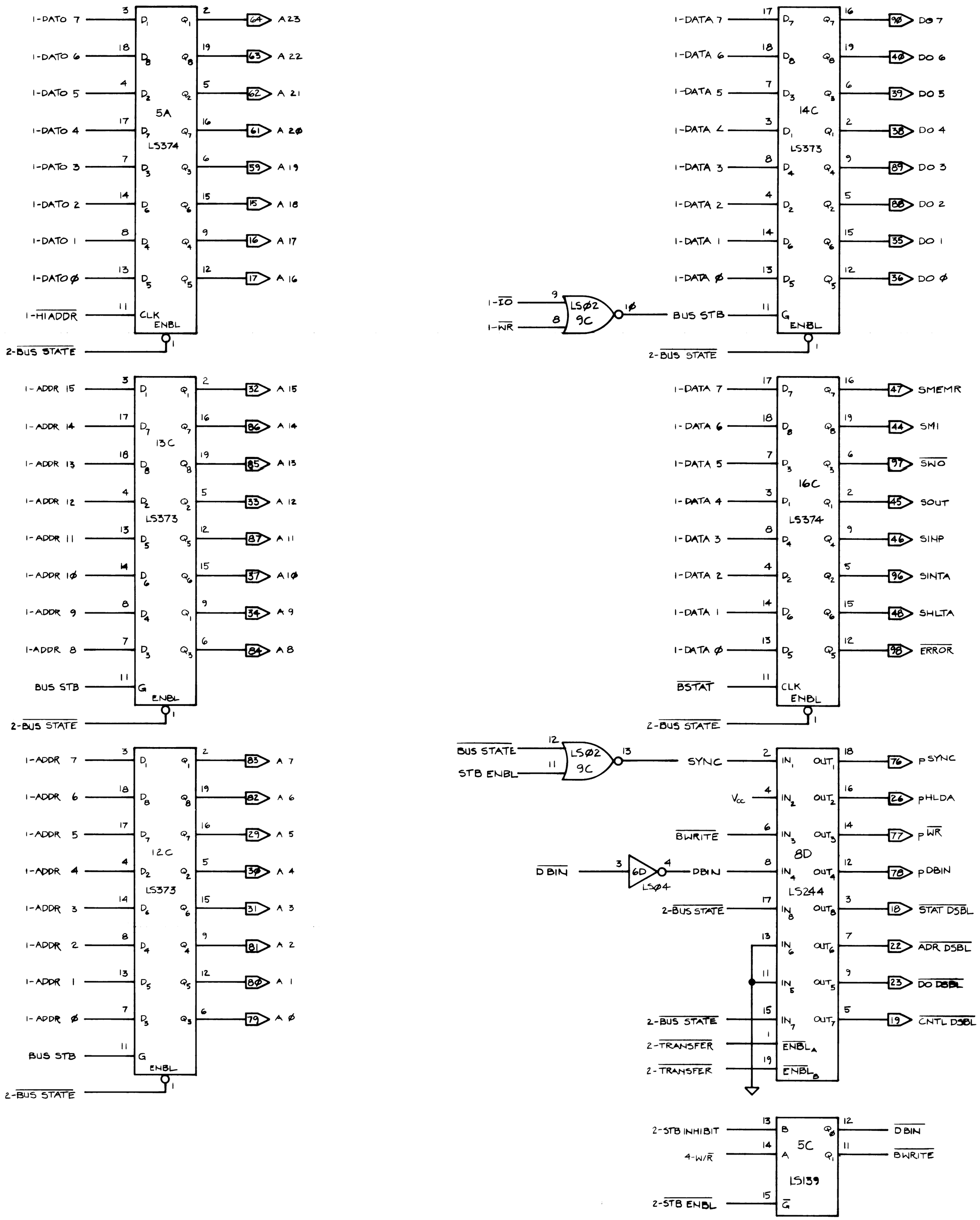

DISK JOCKEY / DMA **PAGE 3 of 5**

BUS BUFFERS

© 1980 G. MORROW

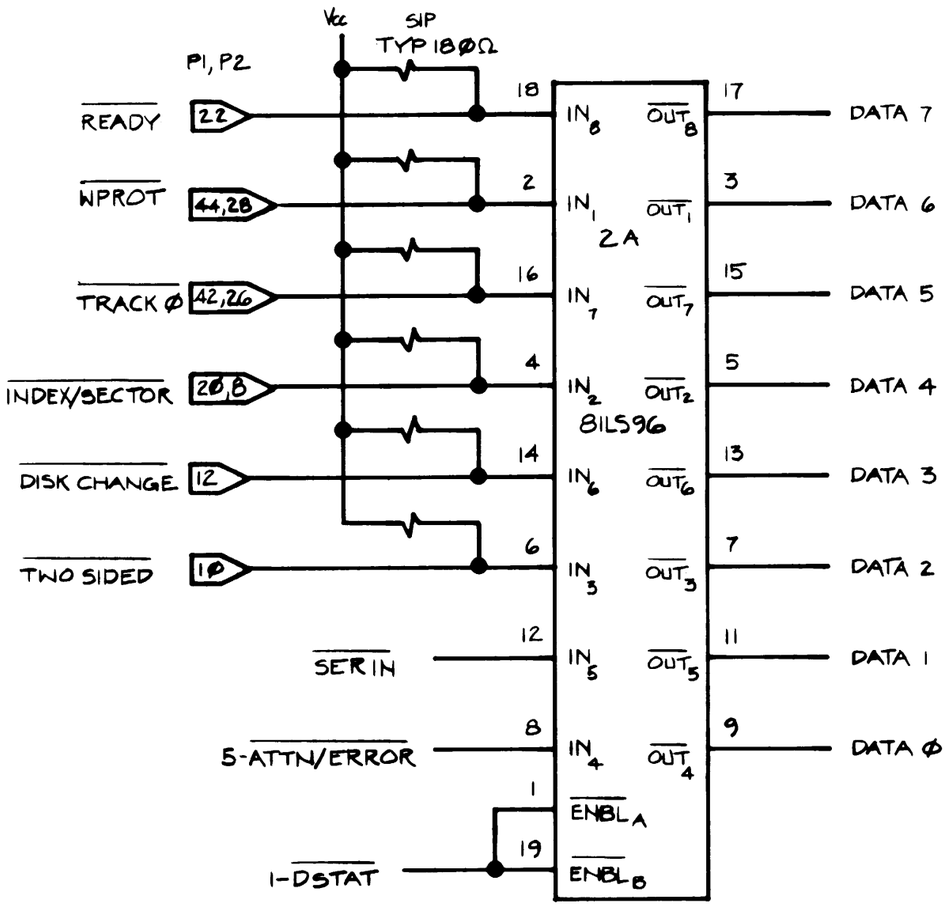

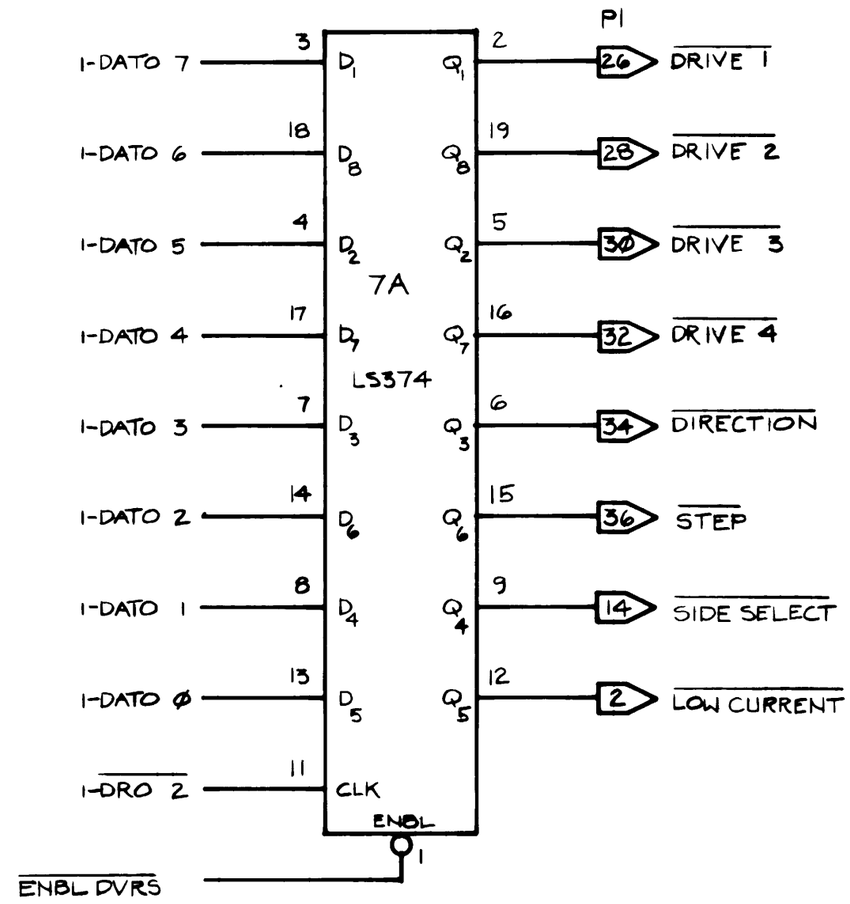

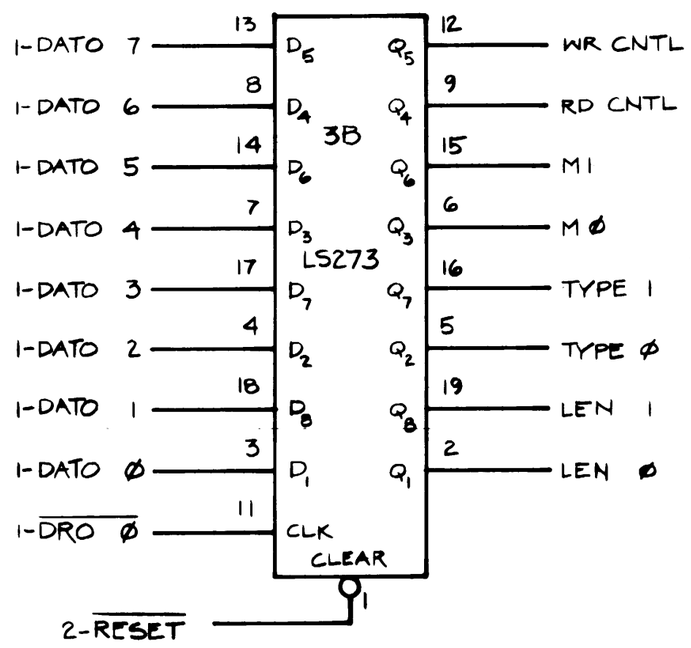

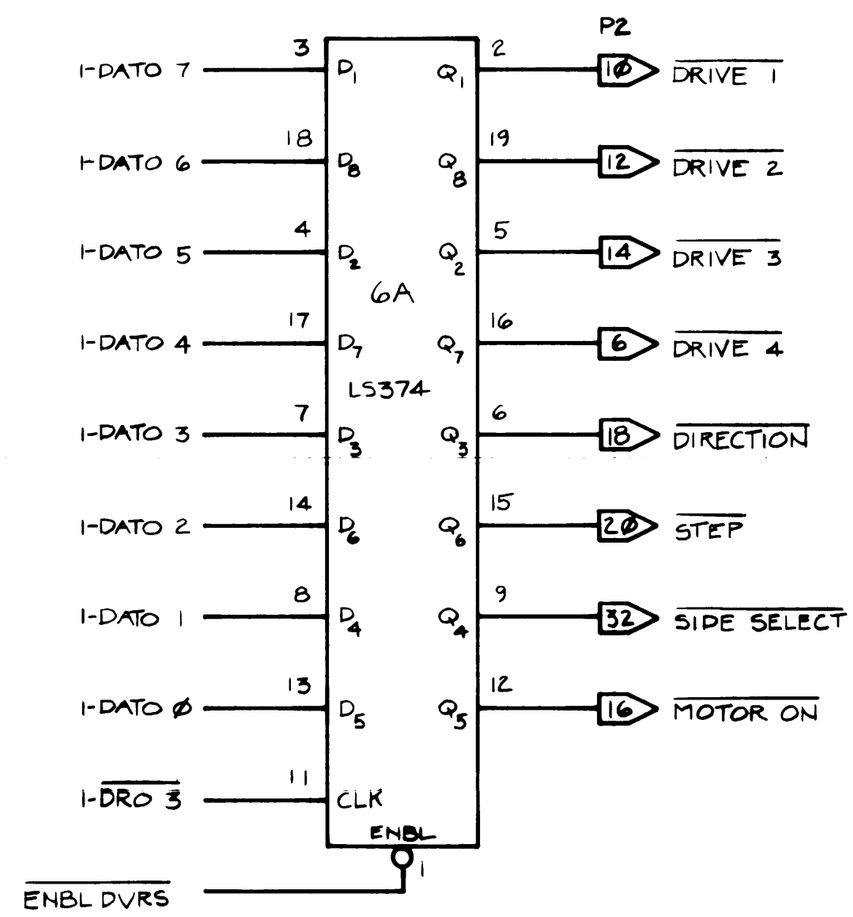

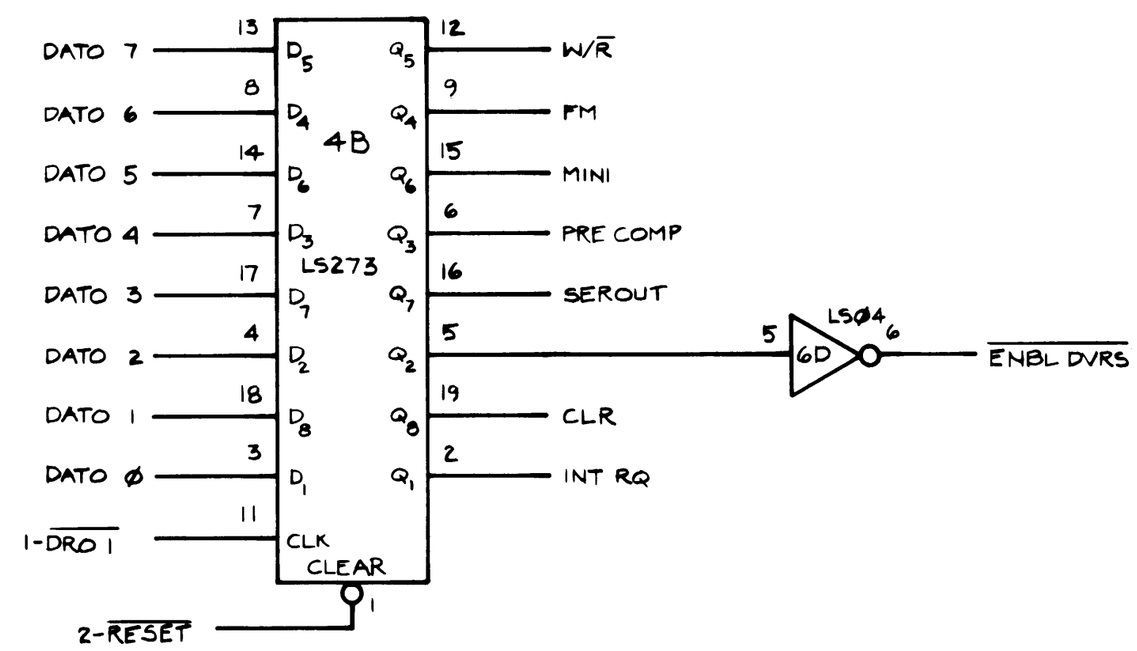

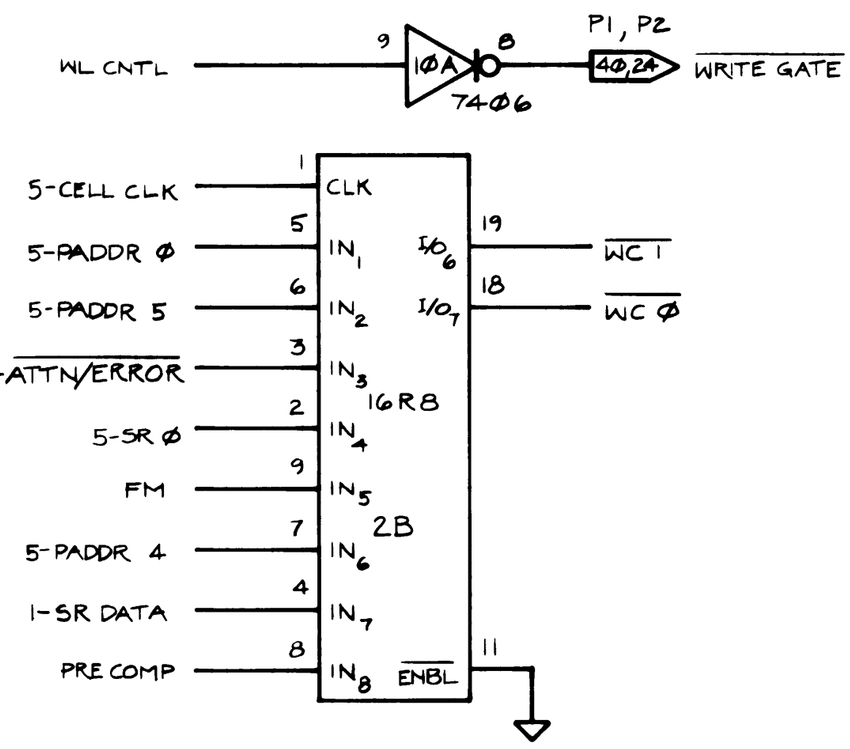

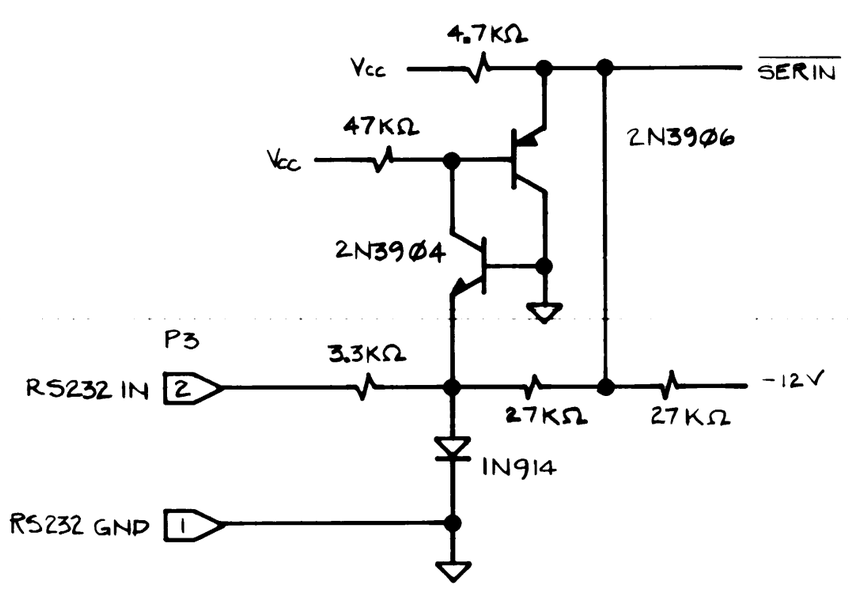

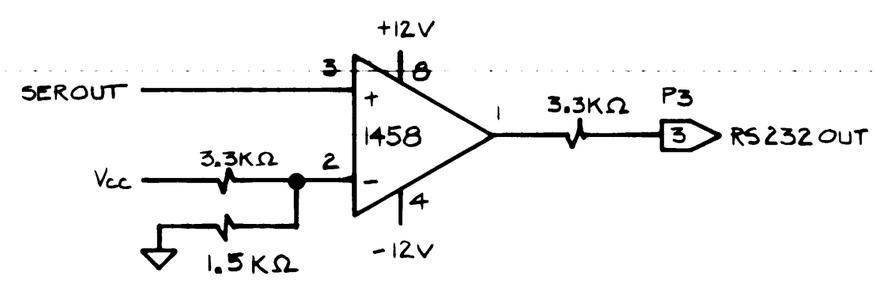

DISK JOCKEY / DMA **PAGE 4 of 5**

DRIVE & CONTROL REGISTERS

© 1980 G. MORROW

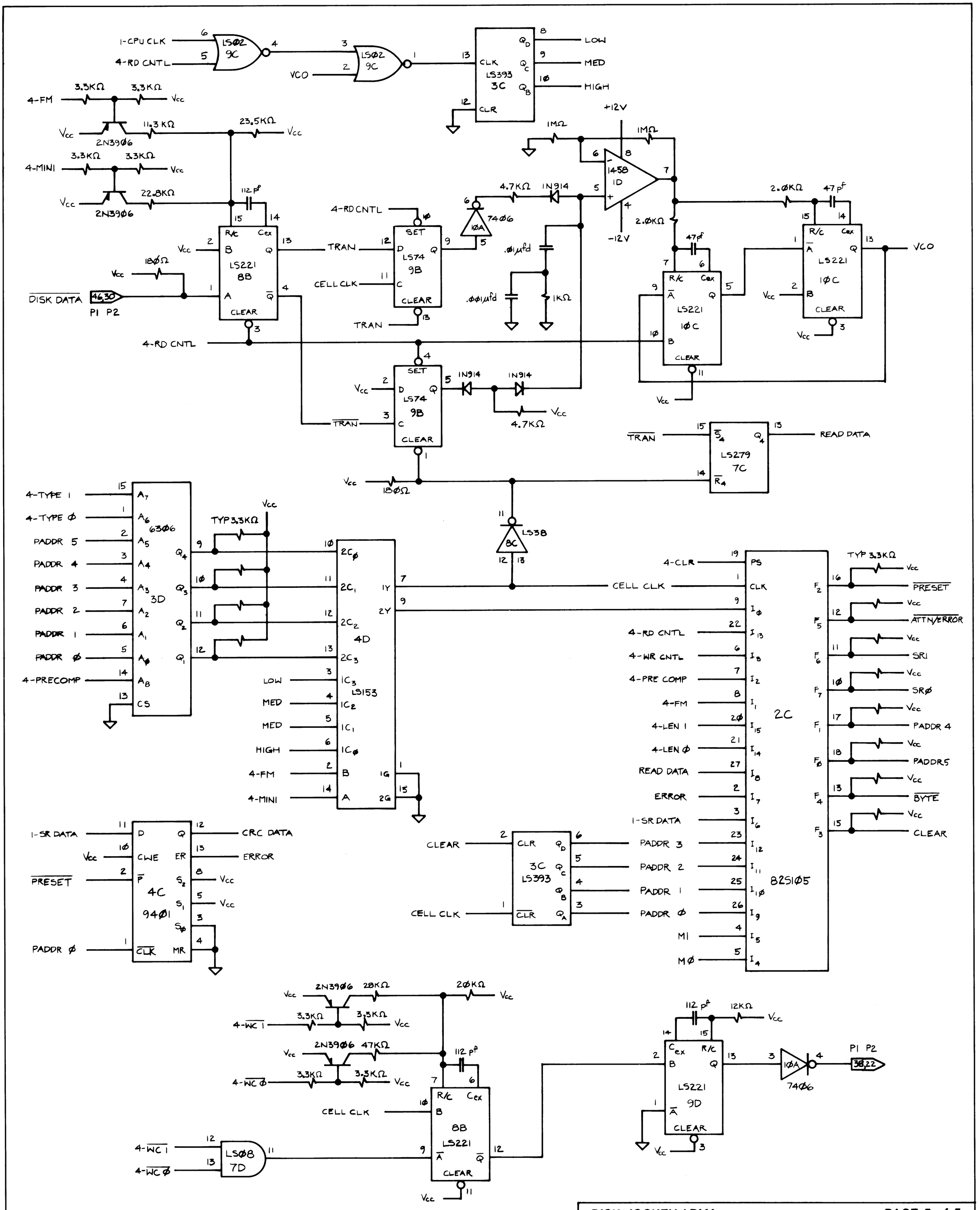

DISK JOCKEY / DMA **PAGE 5 of 5**

DISK READ/WRITE LOGIC

© 1980 G. MORROW