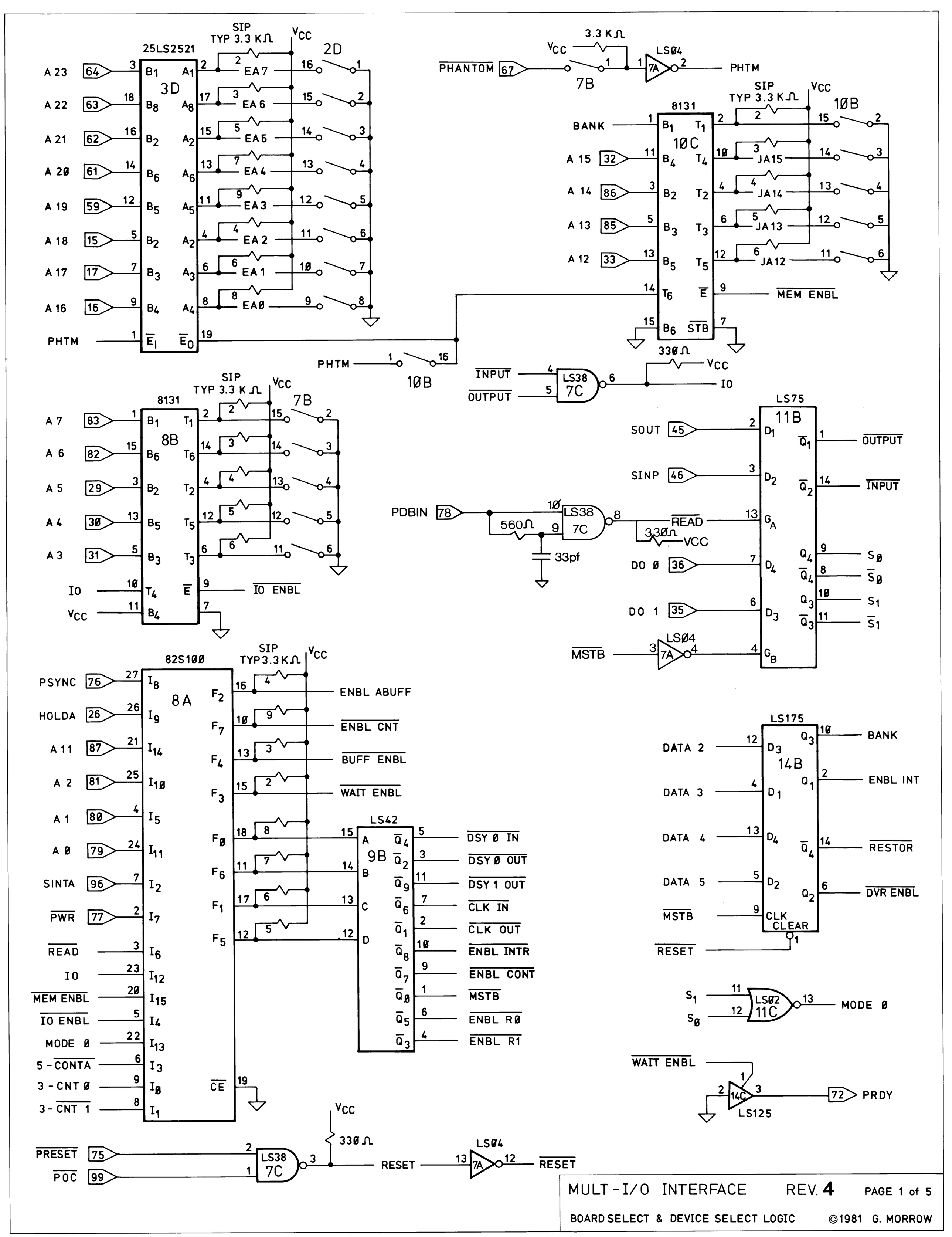

MULT-I/O INTERFACE REV. 4 PAGE 1 of 5

BOARD SELECT & DEVICE SELECT LOGIC ©1981 G. MORROW

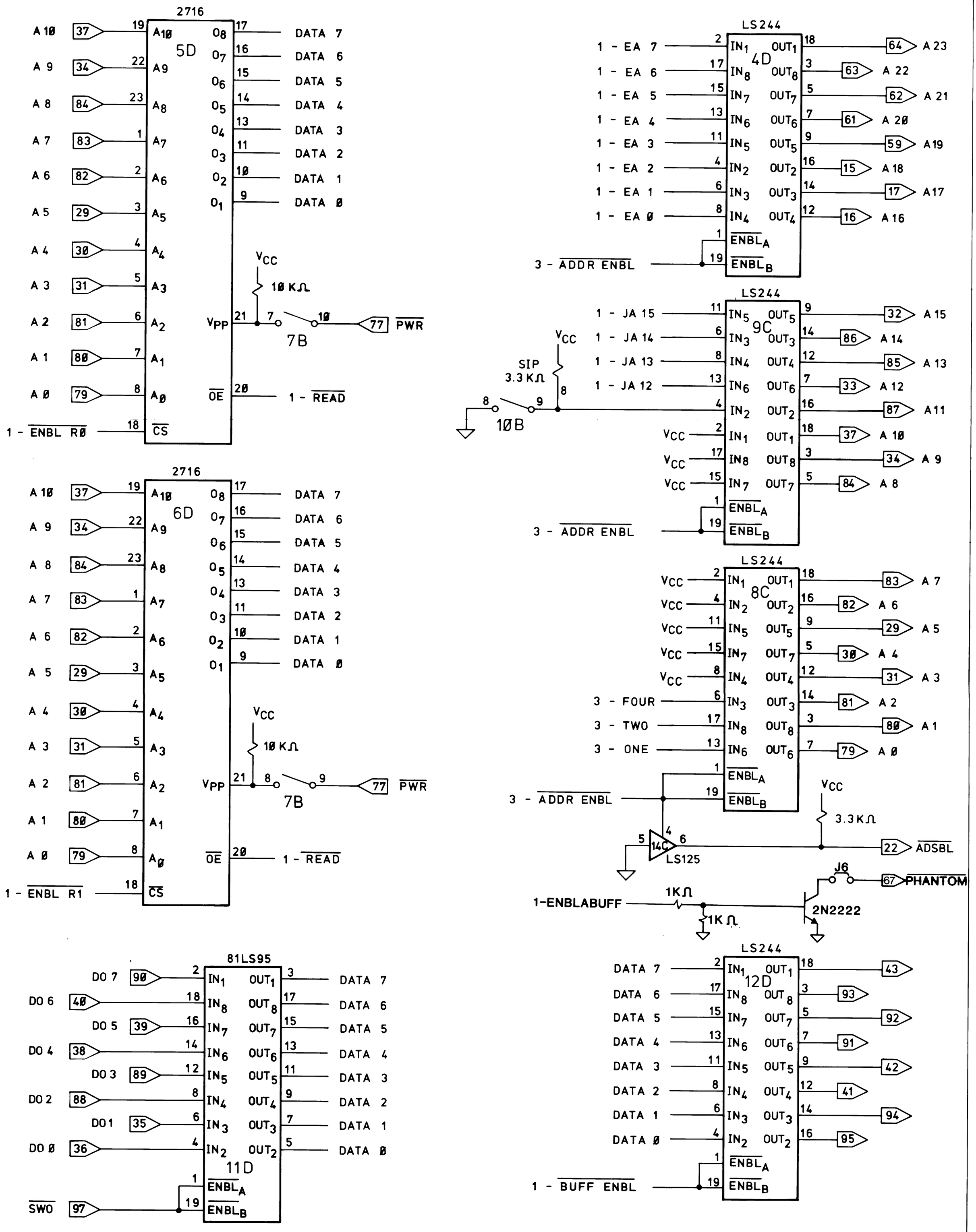

MULT-I/O INTERFACE REV. 4 PAGE 2 of 5

ADDRESS & DATA BUFFERS, MEMORY ©1981 G MORROW

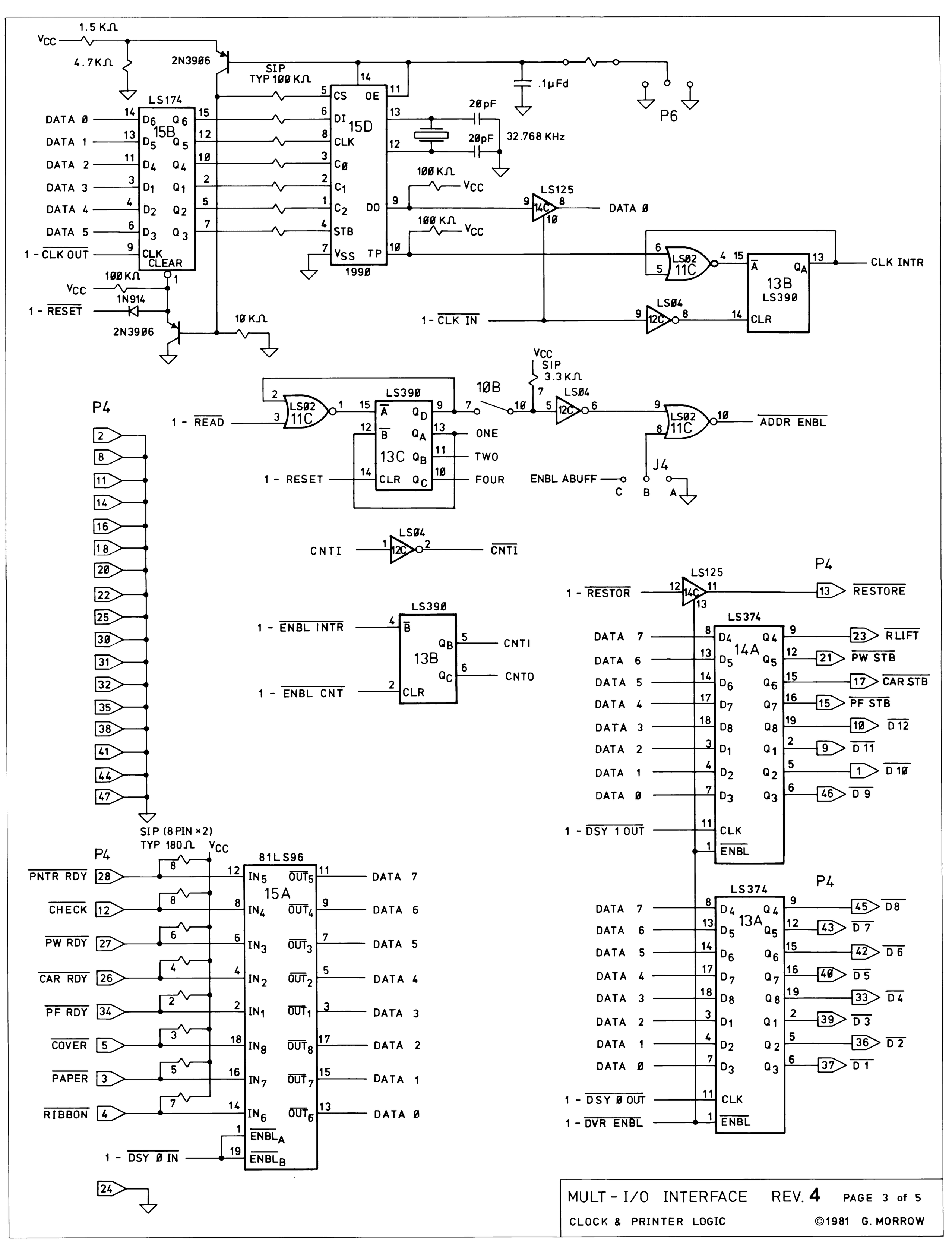

MULT - I/O INTERFACE REV. 4 PAGE 3 of 5

CLOCK & PRINTER LOGIC ©1981 G. MORROW

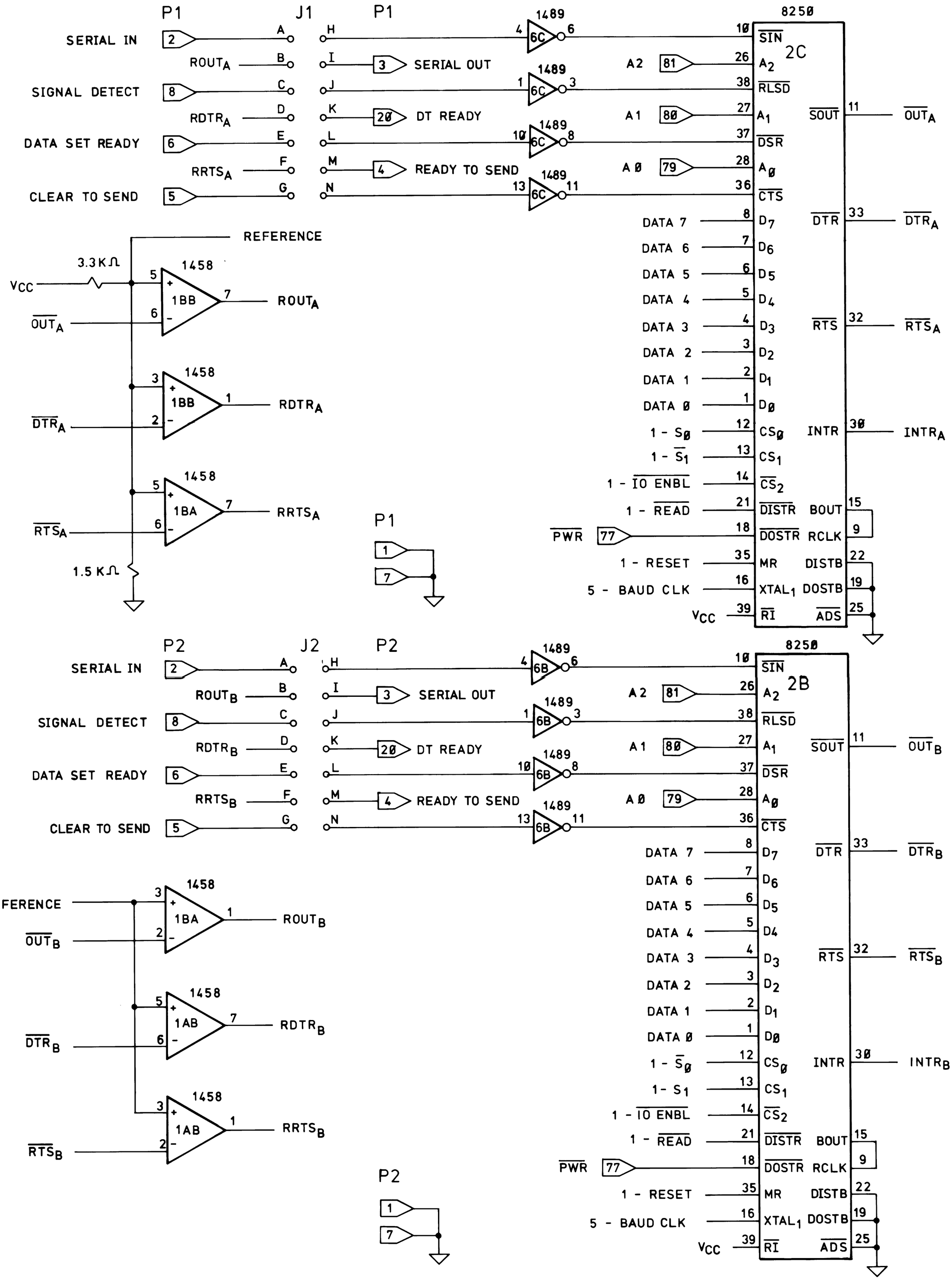

MULT-I/O INTERFACE REV. 4 PAGE 4 of 5

SERIAL PORTS A & B

©1981 G MORROW

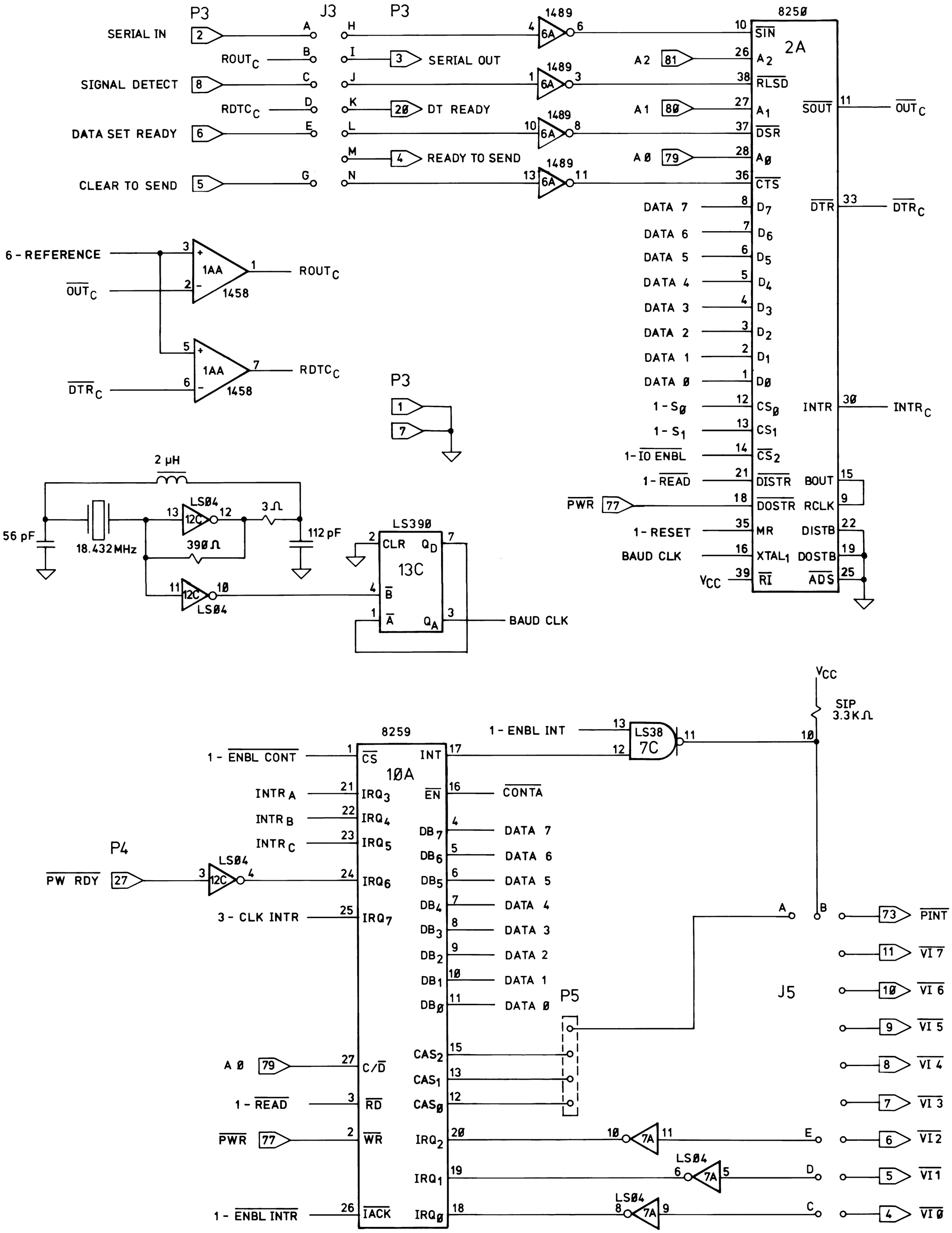

MULT-I/O INTERFACE REV.4 PAGE 5 of 5

SERIAL PORT C & CONTROLLER LOGIC ©1981 G MORROW