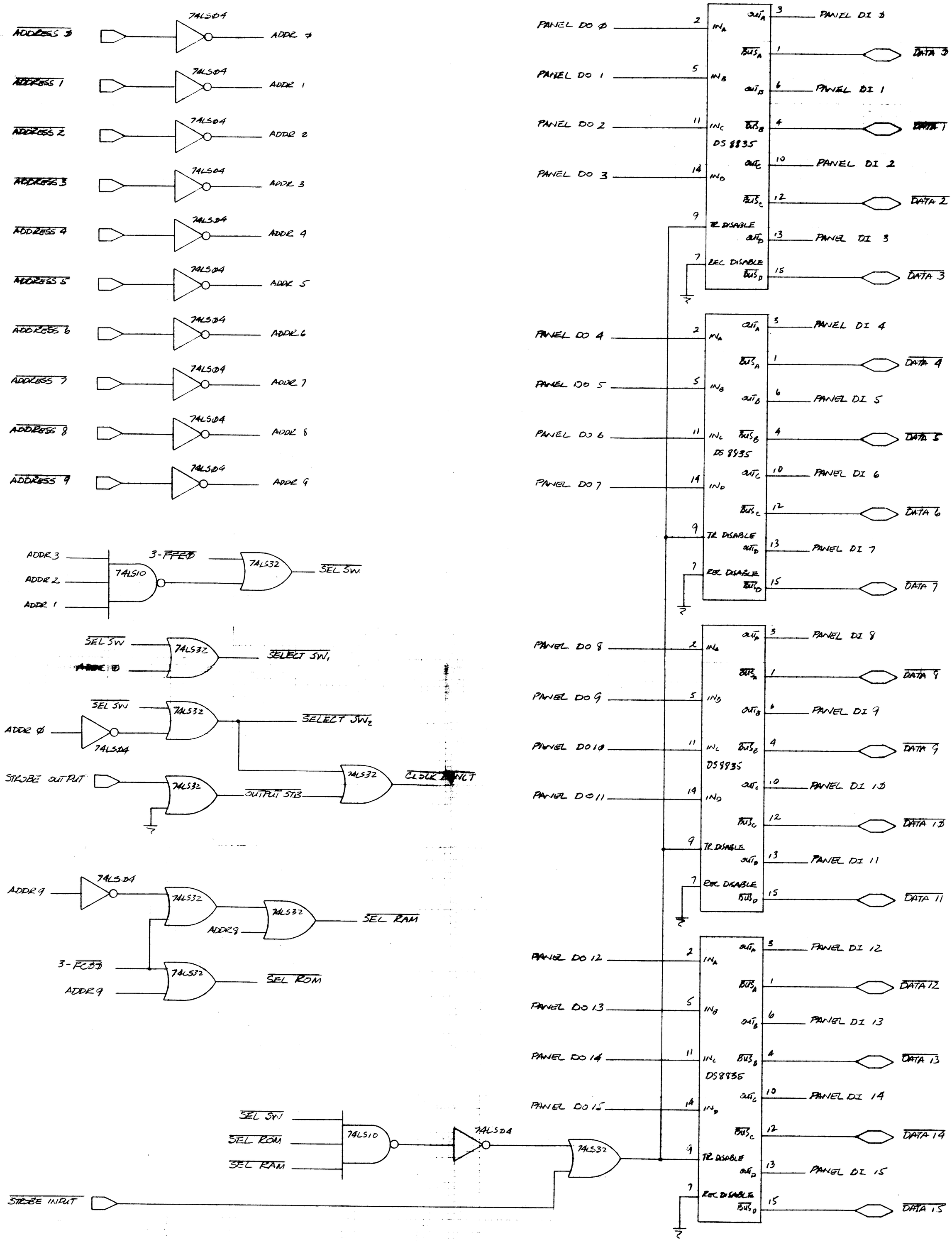

MINI-COMPUTER KIT FRONT PANEL PAGE 1 OF

DATA & ADDRESS BUFFERS & ROM/RAM SELECT ©1976 G. MORROW

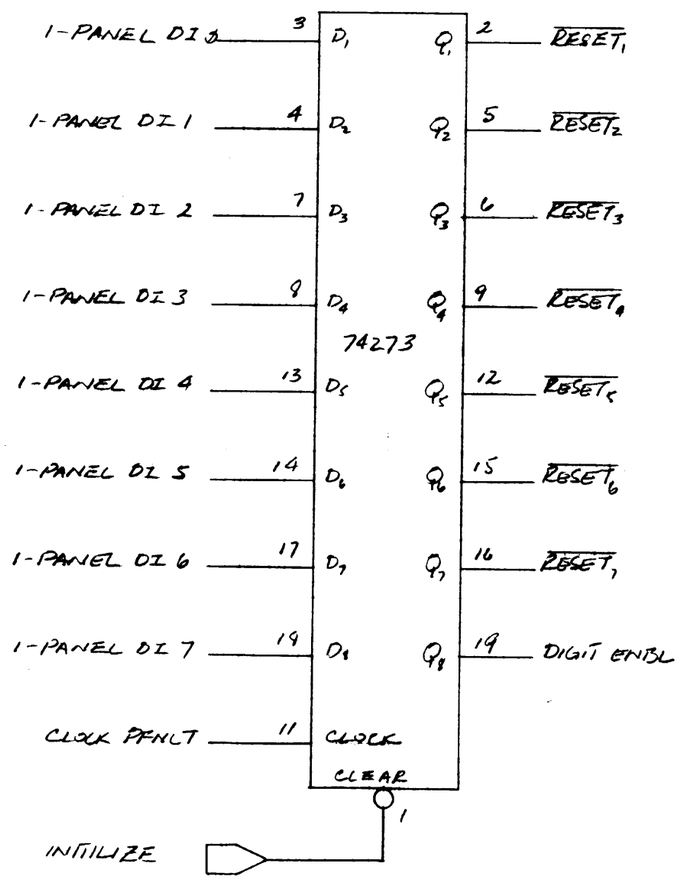

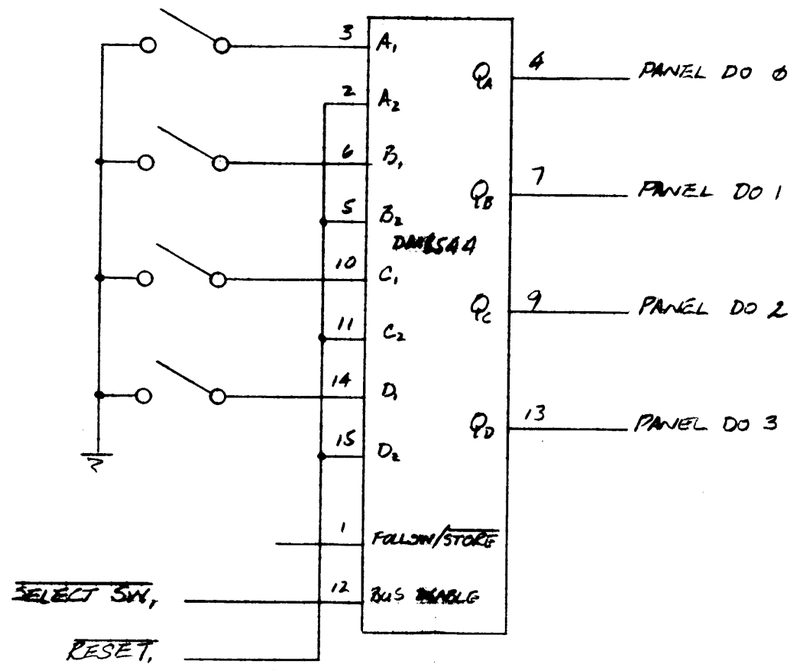

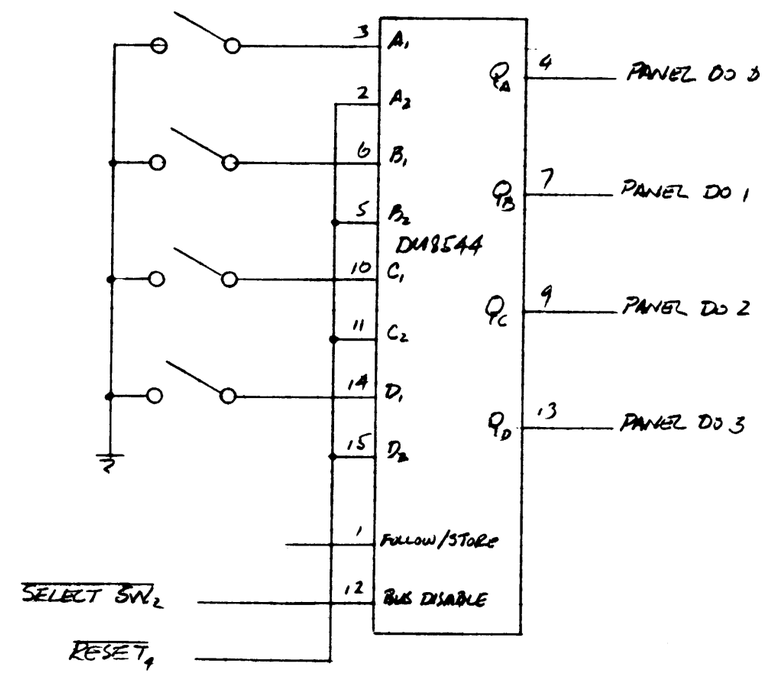

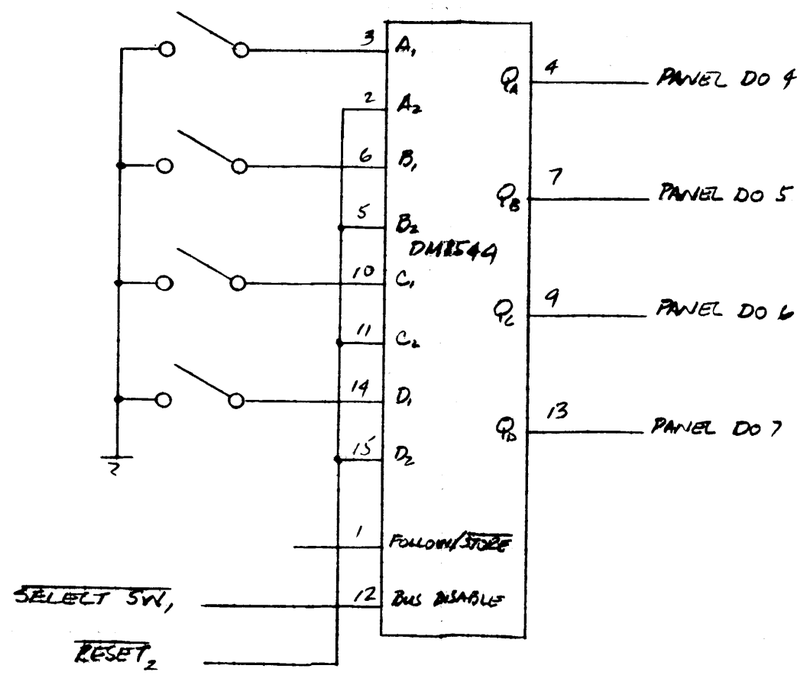

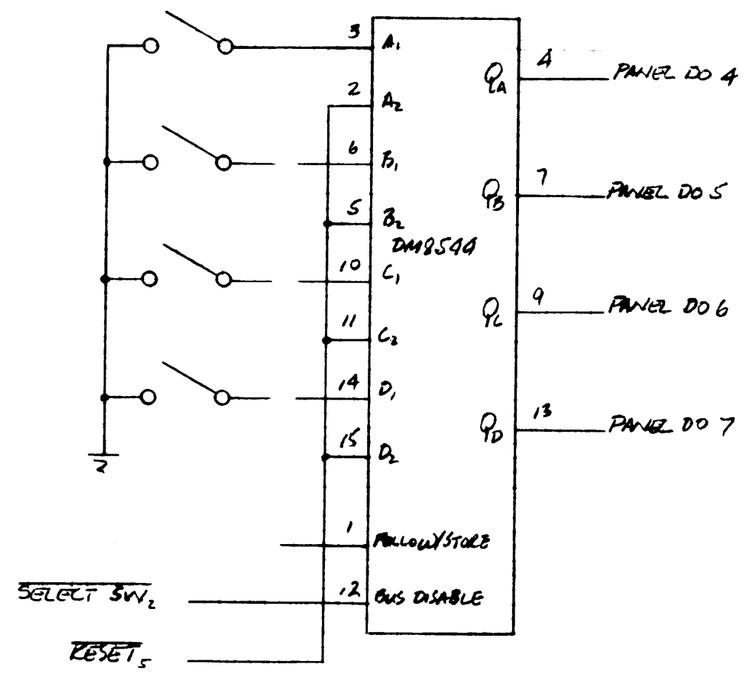

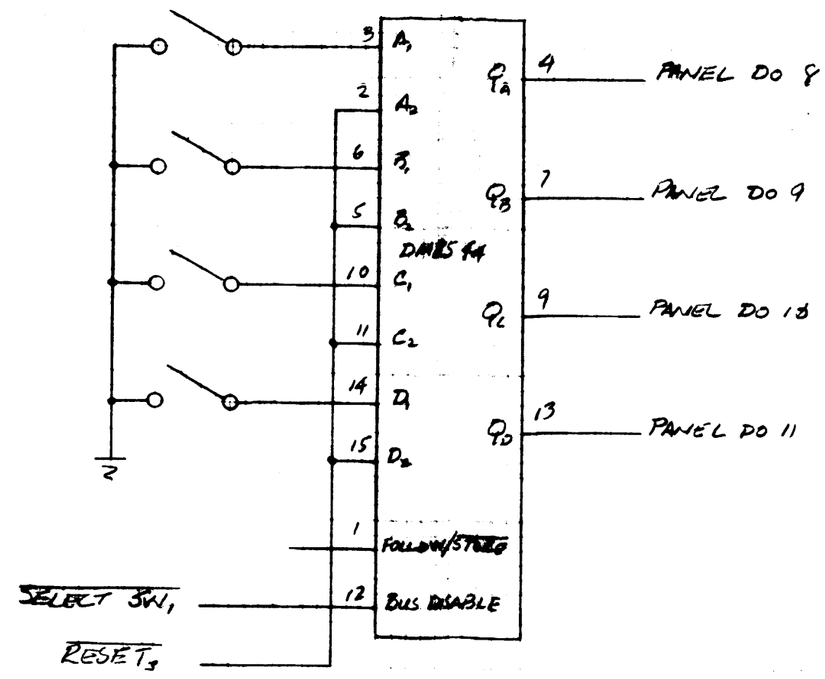

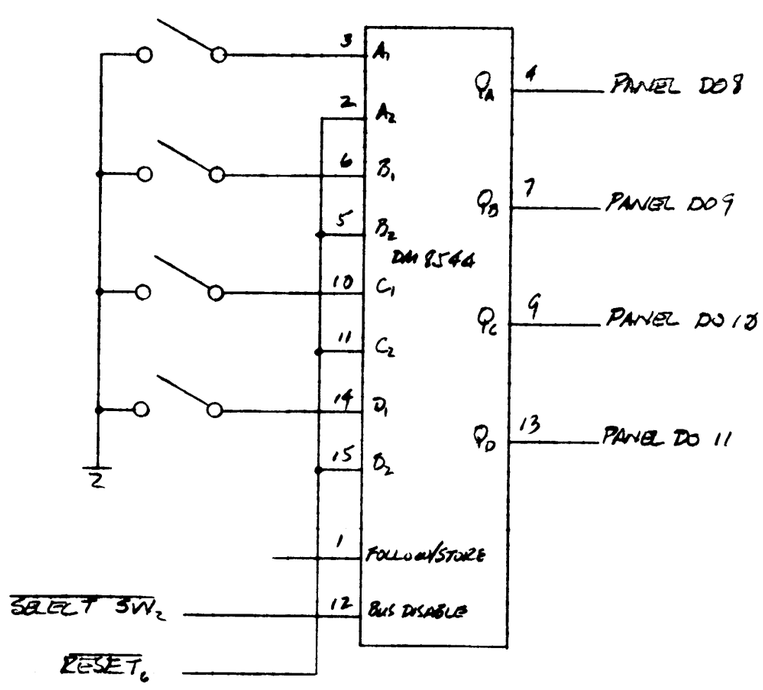

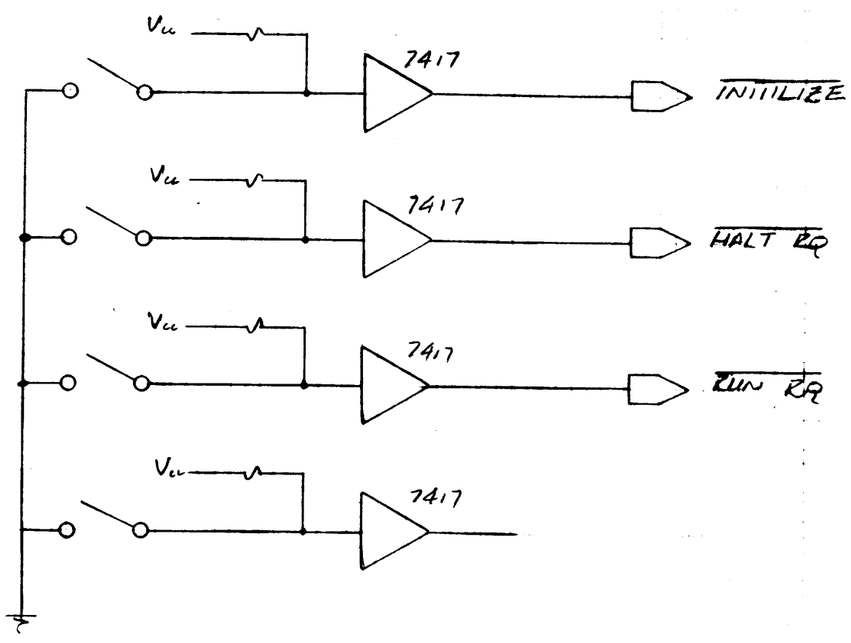

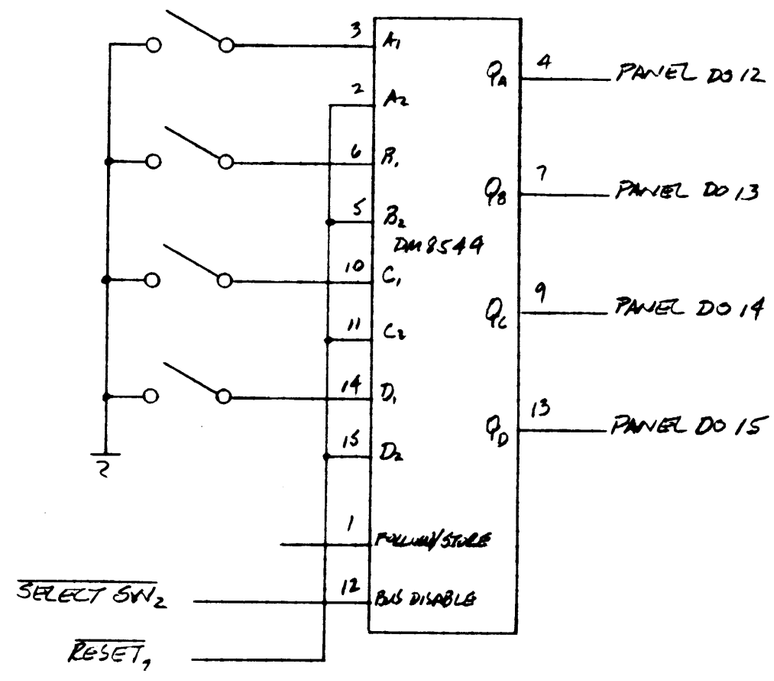

MINI-COMPUTER KIT FRONT PANEL PAGE 2 OF

FRONT PANEL SWITCH LOGIC & BUFFERS ©1976 G. MORROW

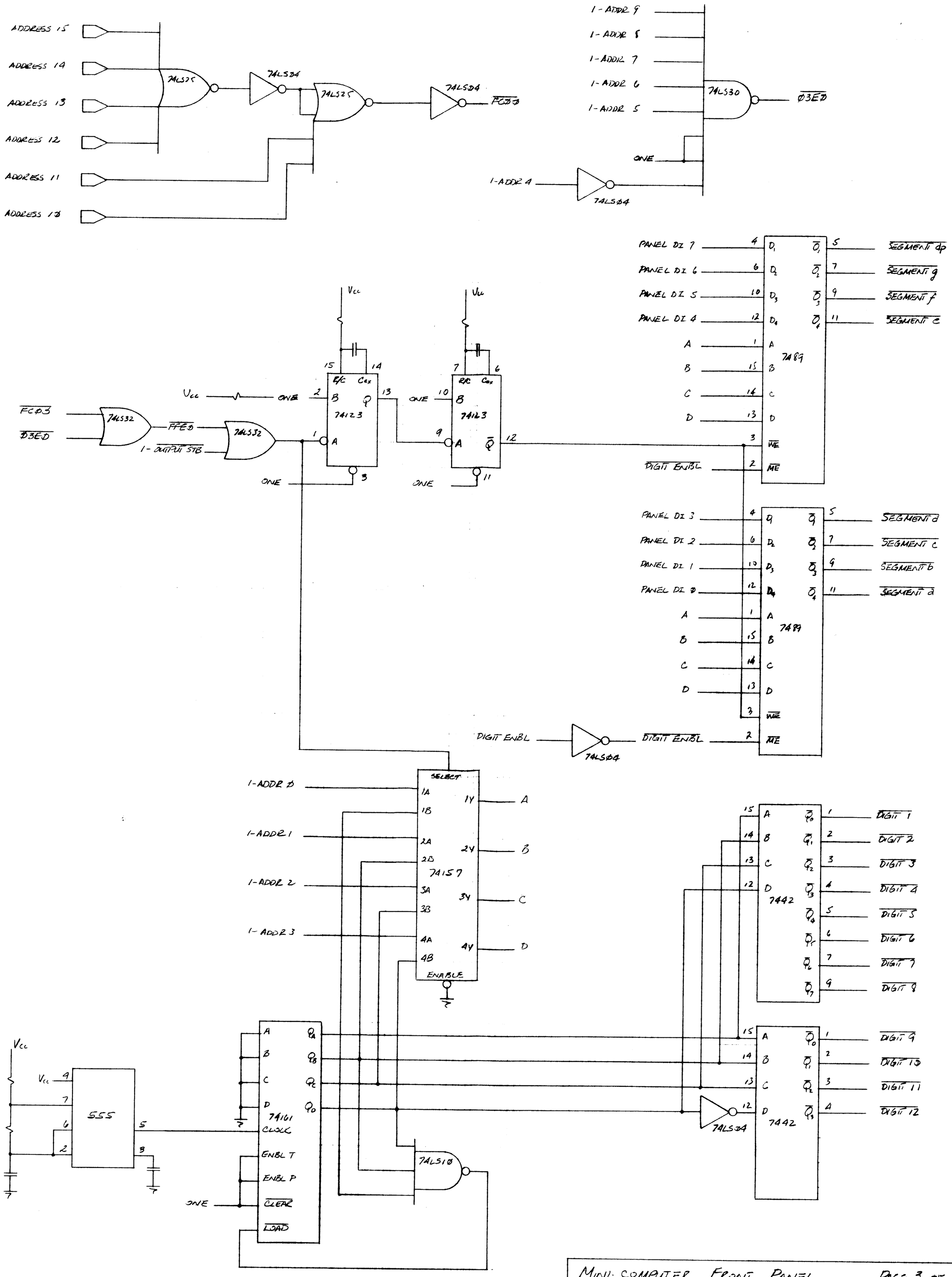

MINI-COMPUTER FRONT PANEL — PAGE 3 OF

DISPLAY STORAGE & MULTIPLEX LOGIC — ©1976 G. MORROW

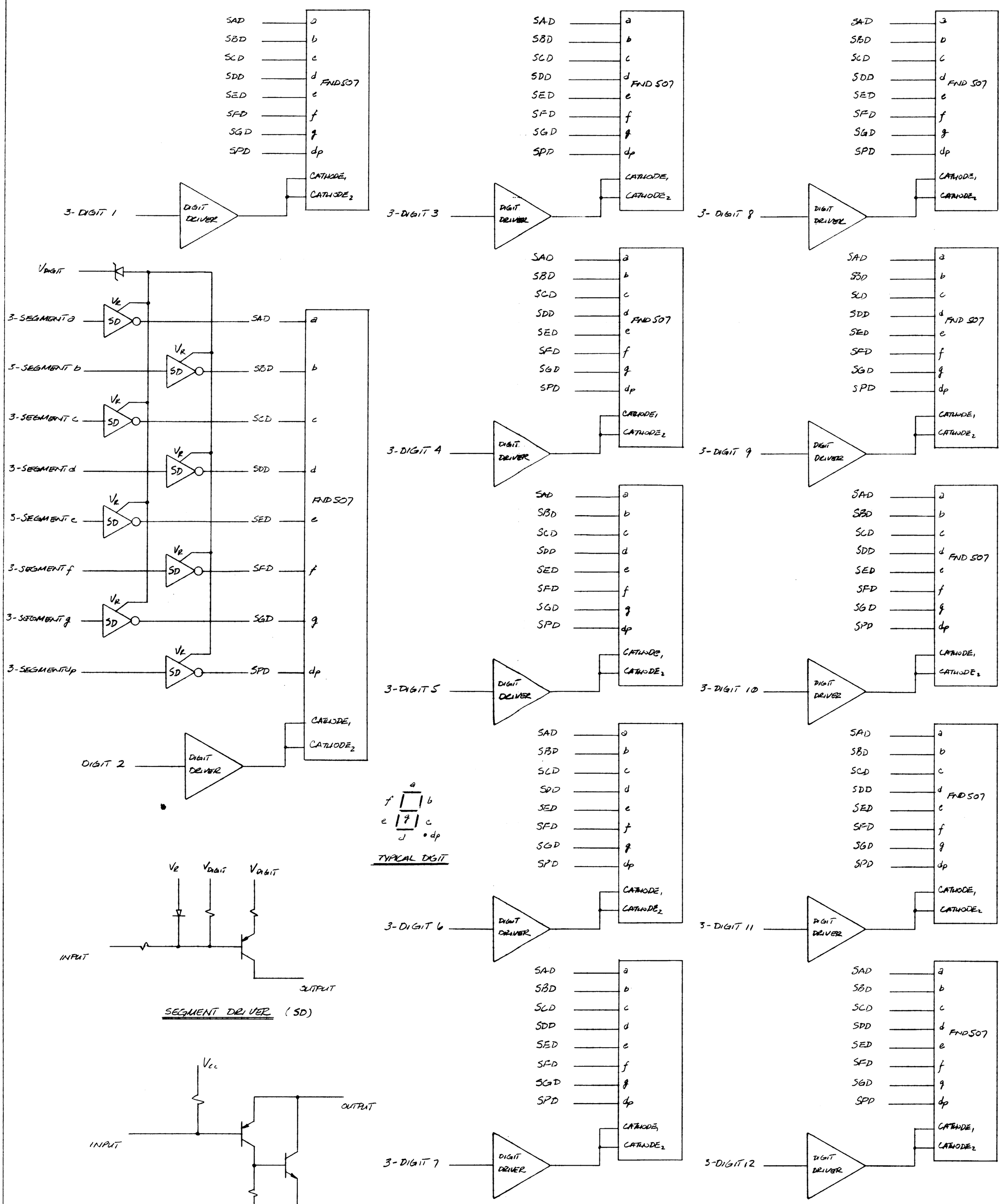

MINI-COMPUTER FRONT PANEL

DISPLAY DRIVERS & LOGIC

PAGE 4 OF

© 1976 G. MORROW

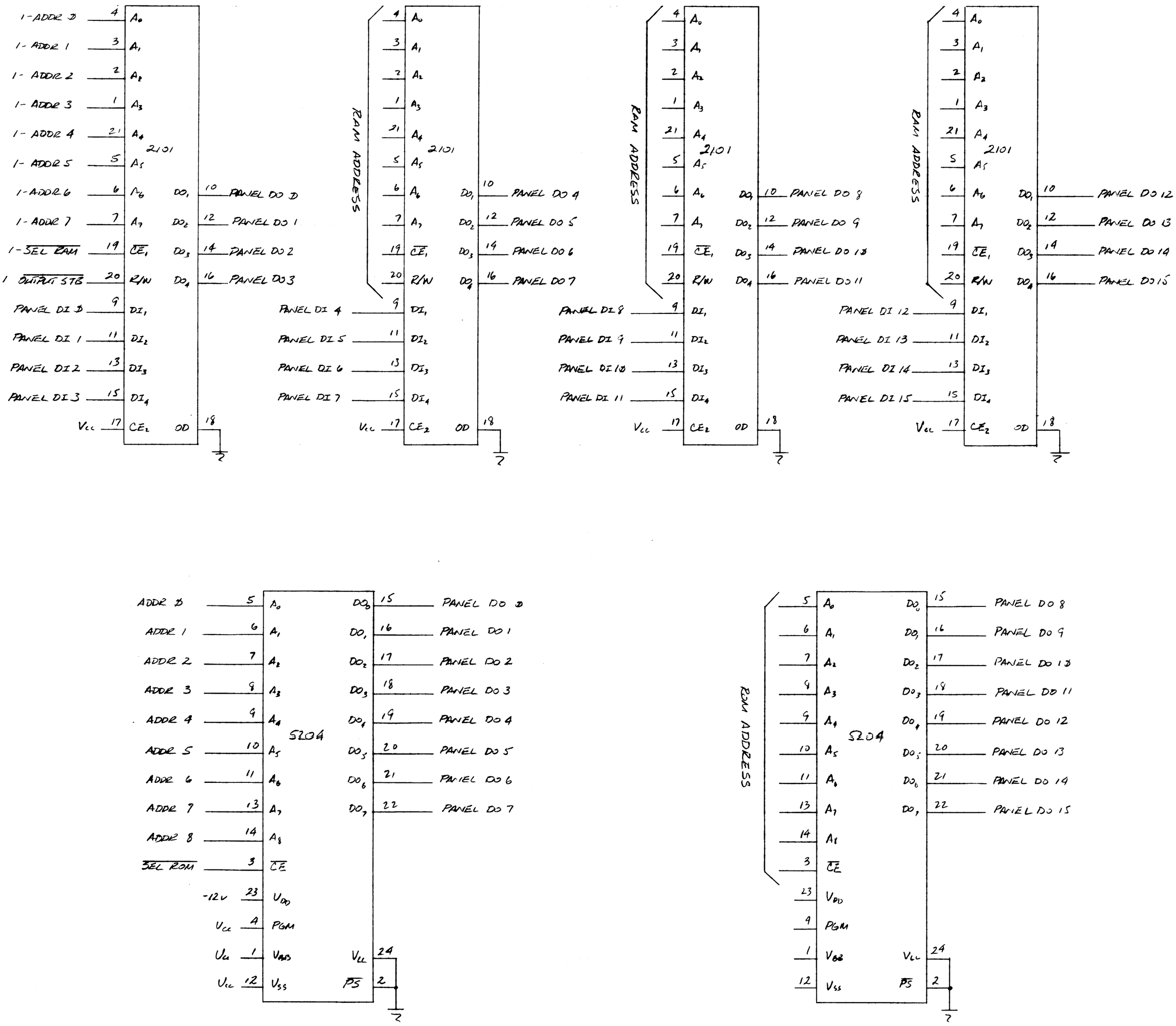

MINI-COMPUTER FRONT PANEL — PAGE 5 OF 5

LOCAL RAM & ROM MEMORY — © 1976 G. MORROW