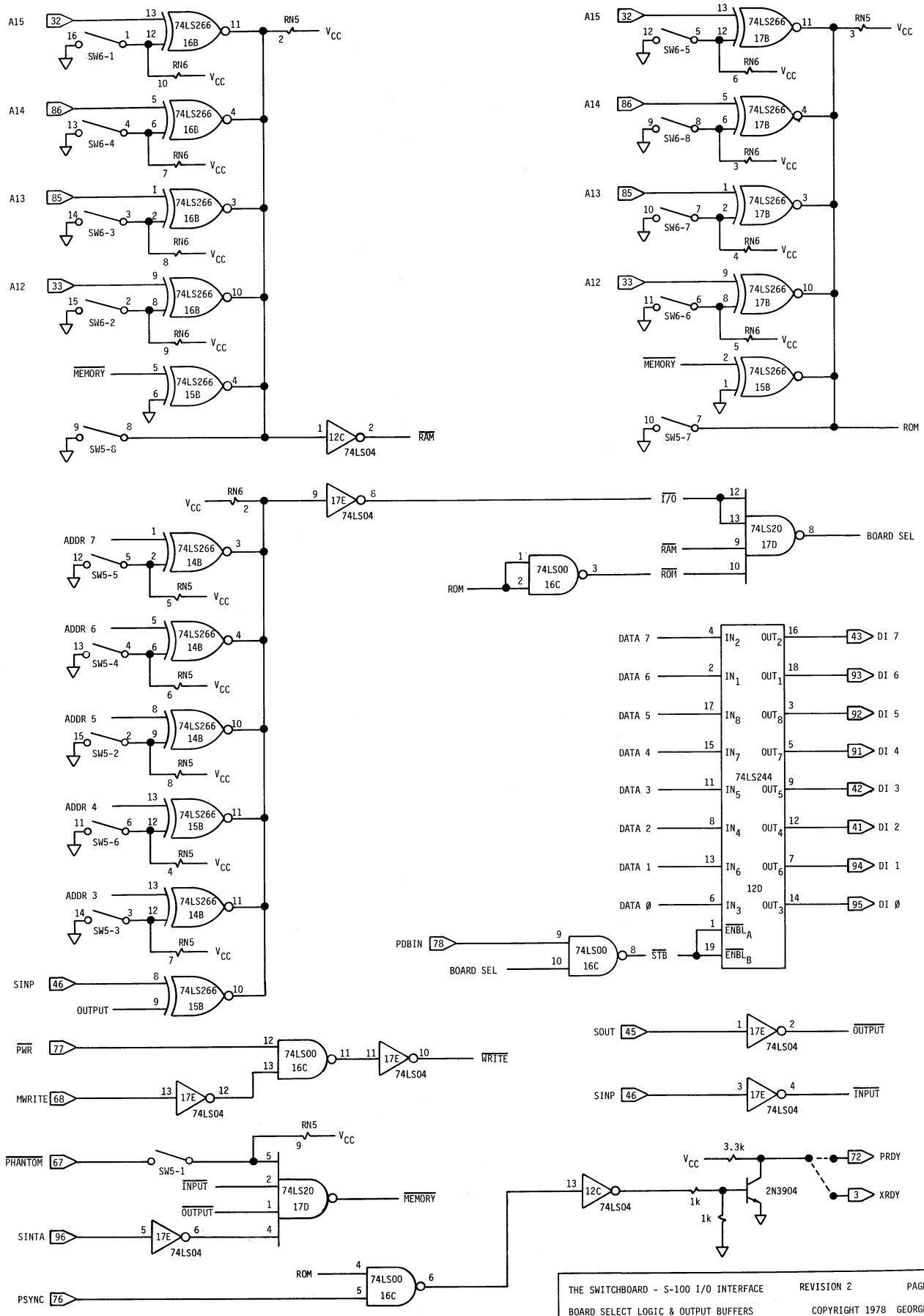

THE SWITCHBOARD - S-100 I/O INTERFACE REVISION 2 PAGE 1 OF 6

BOARD SELECT LOGIC & OUTPUT BUFFERS

COPYRIGHT 1978 GEORGE MORROW

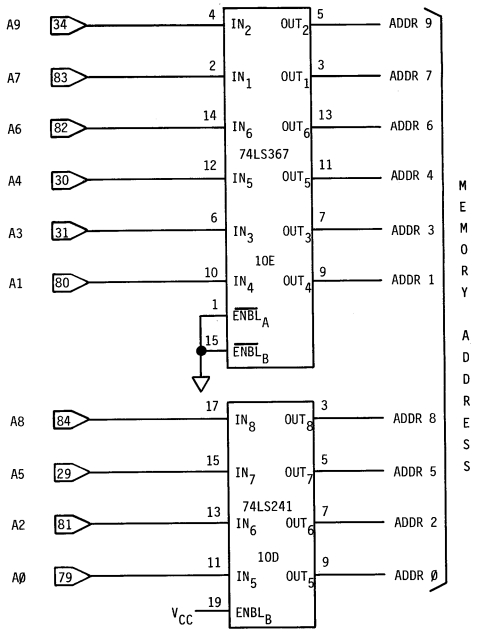

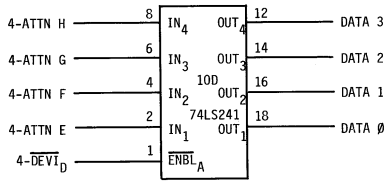

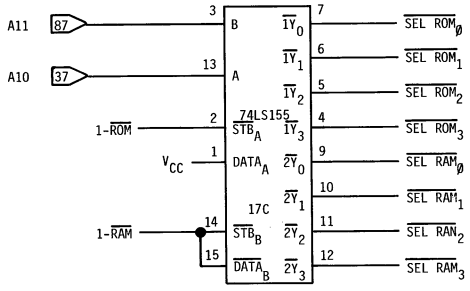

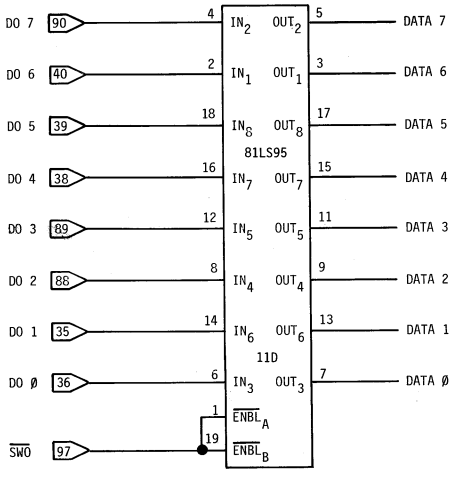

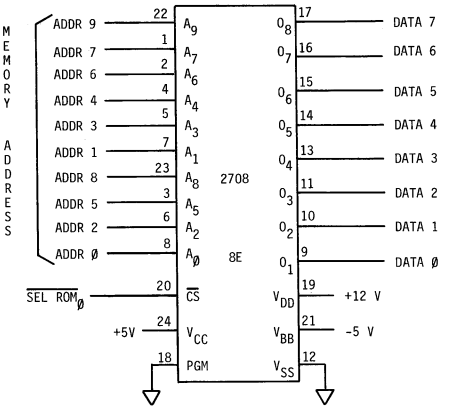

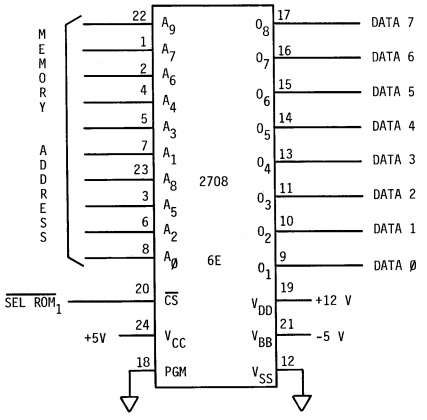

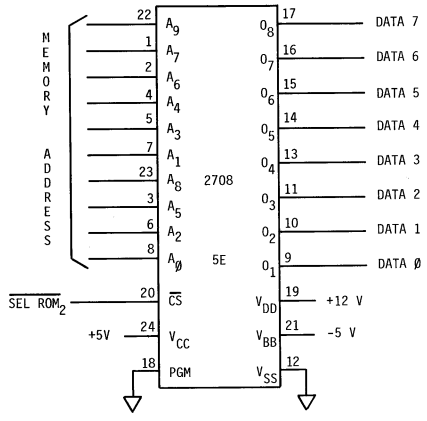

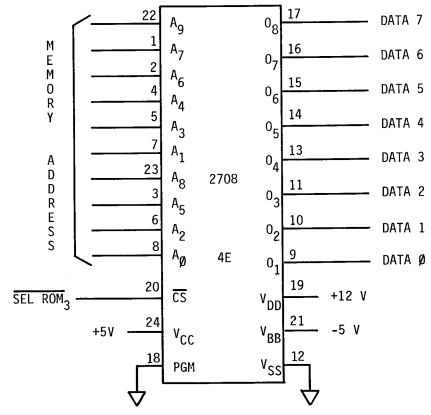

ADDRESS & INPUT DATA BUFFERS, ROM, AND MEMORY SELECT LOGIC

COPYRIGHT 1978 GEORGE MORROW

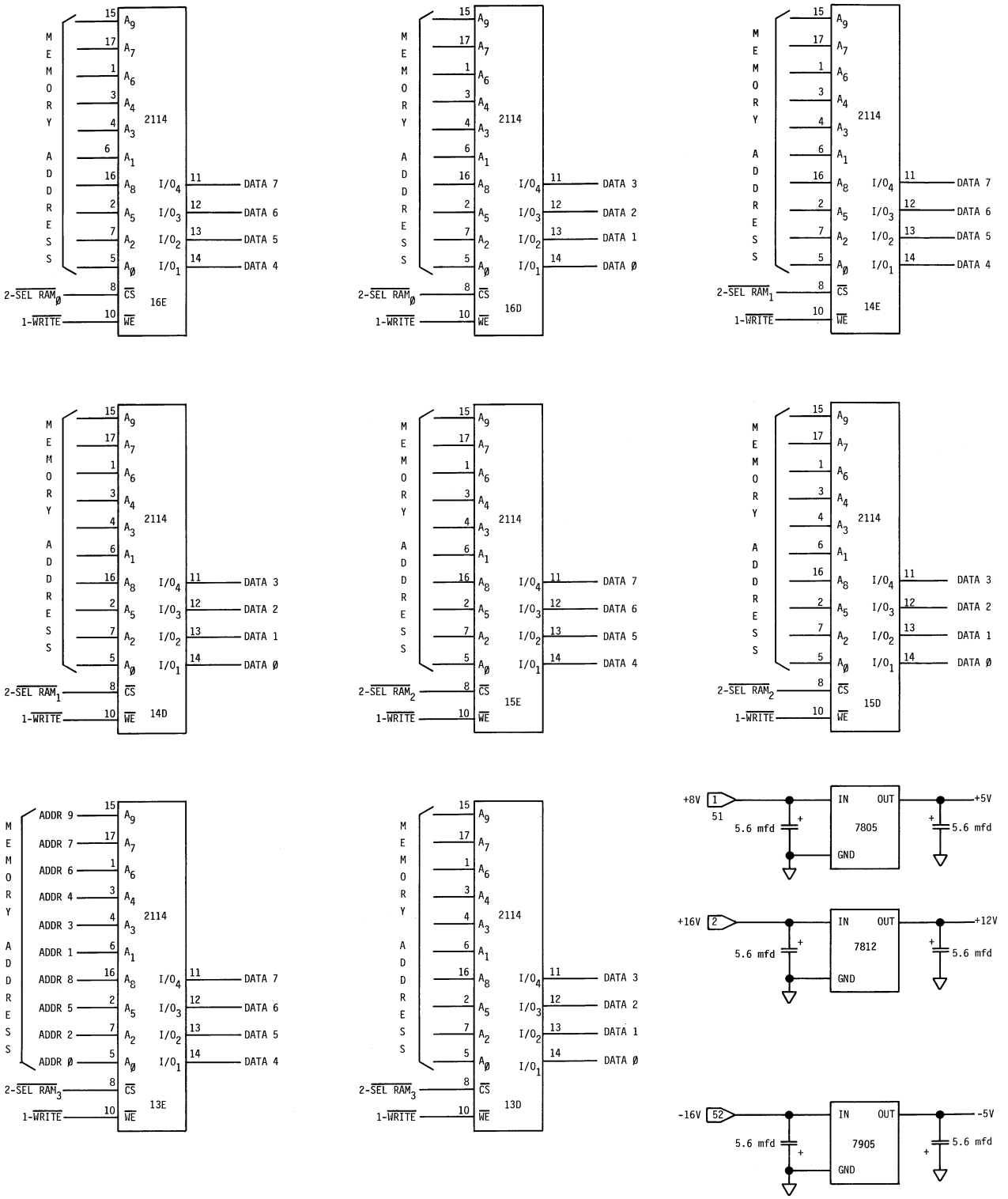

THE SWITCHBOARD - S-100 I/O INTERFACE REVISION 2 PAGE 3 OF 6

RAM MEMORY ARRAY

COPYRIGHT 1978 GEORGE MORROW

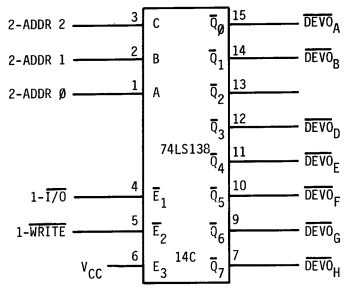

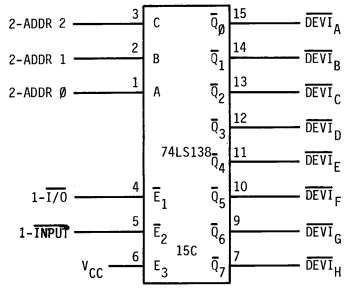

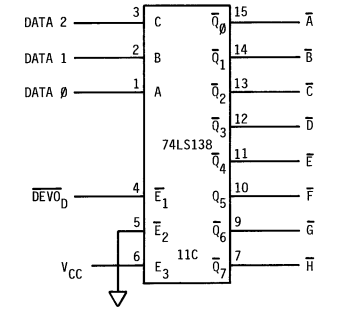

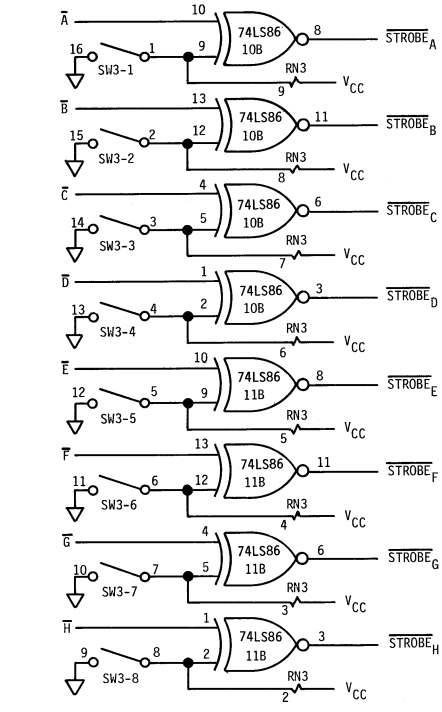

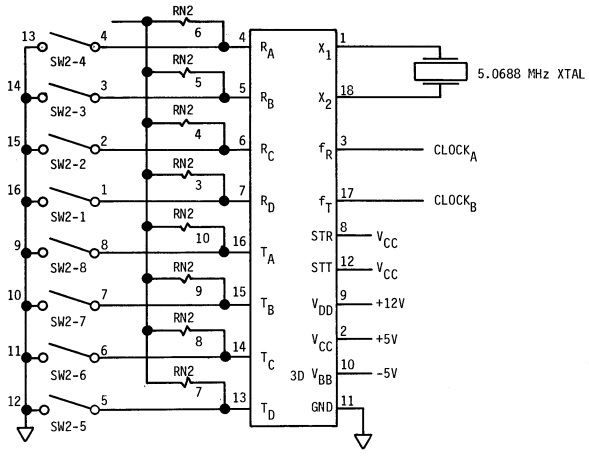

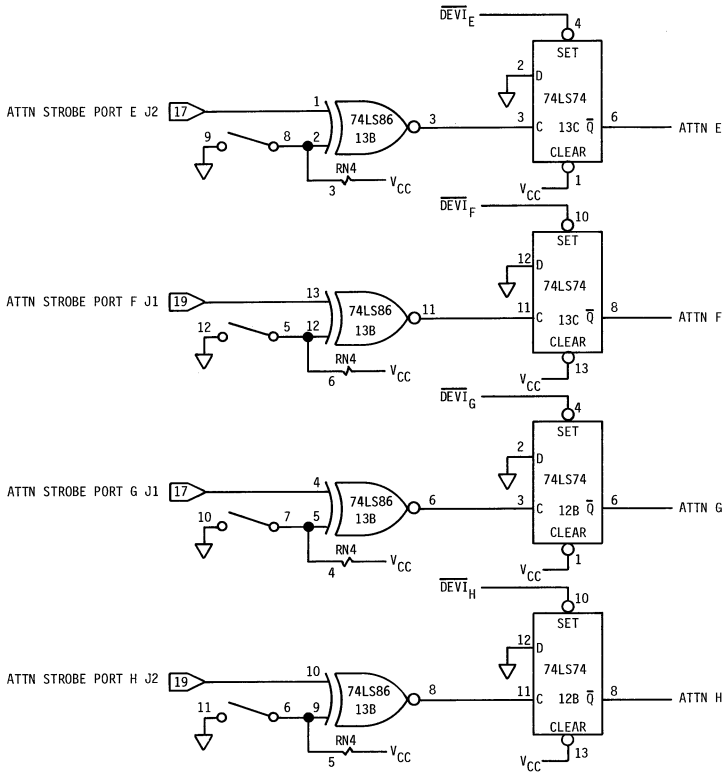

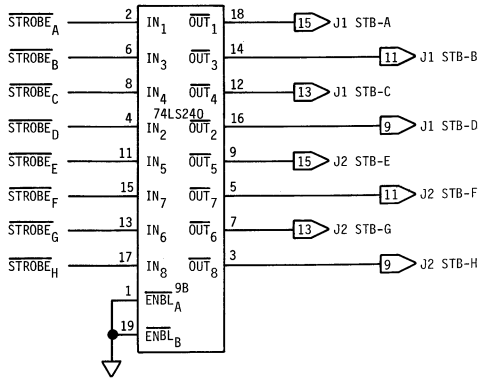

COPYRIGHT 1978
GEORGE MORROW

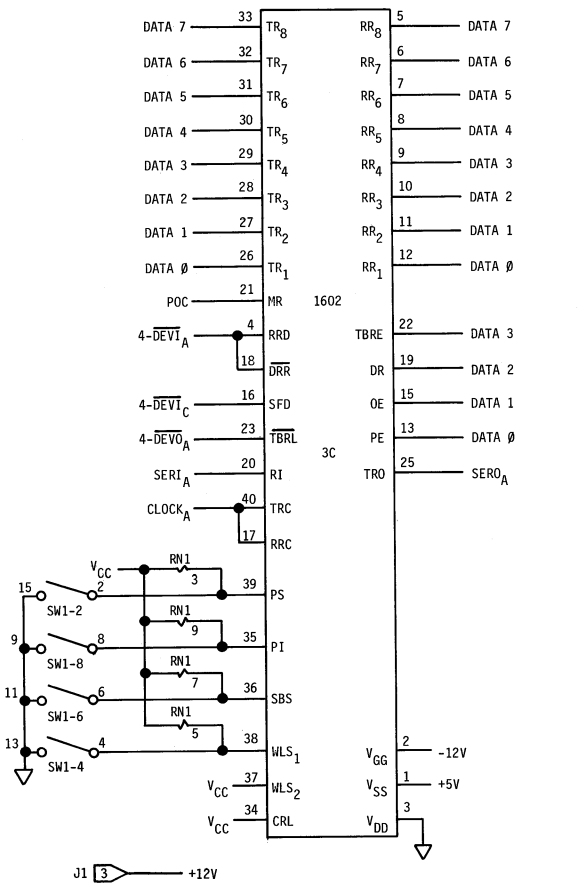

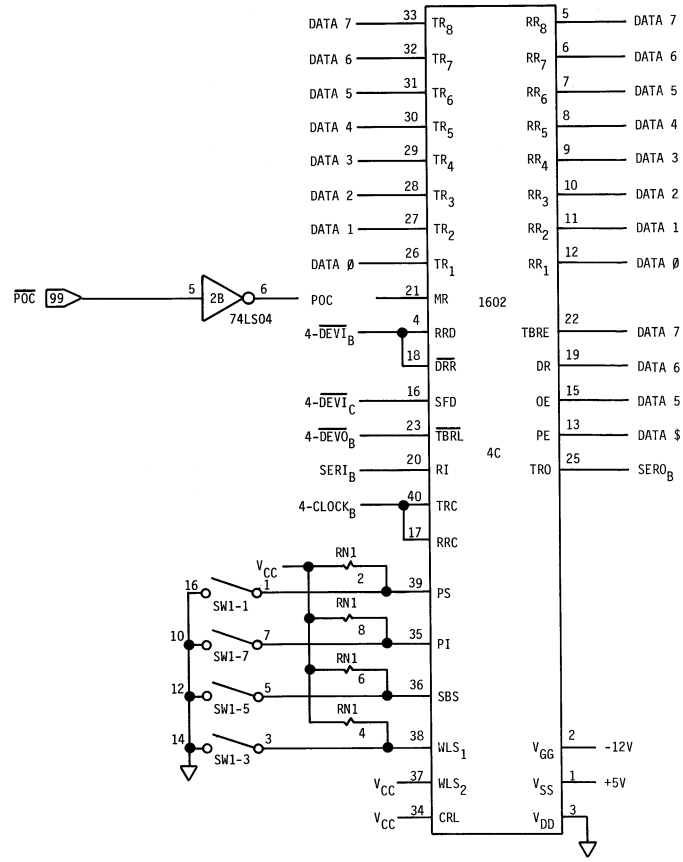

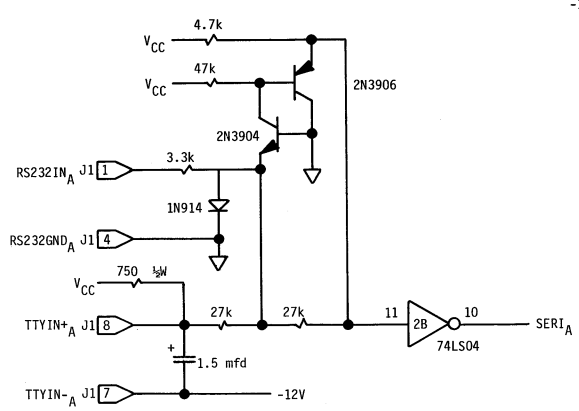

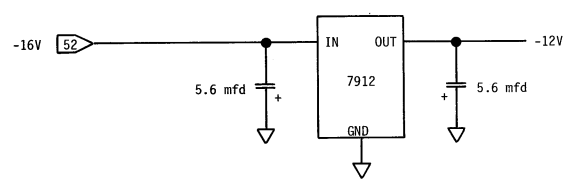

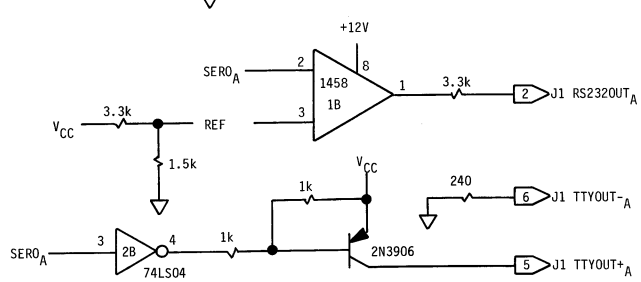

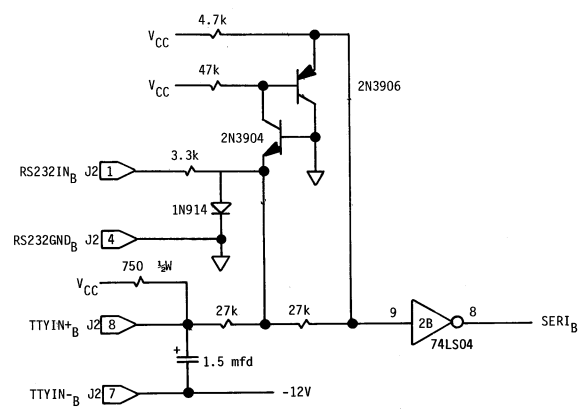

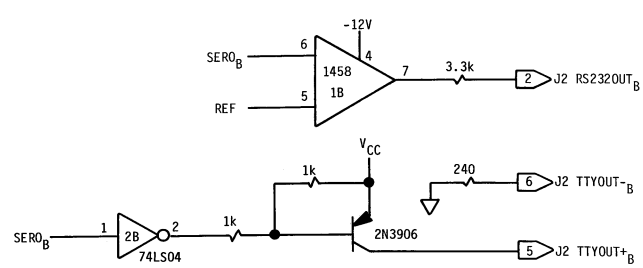

THE SWITCHBOARD - S-100 I/O INTERFACE REVISION 2 PAGE 6 OF 6

SERIAL I/O LOGIC

COPYRIGHT 1978 GEORGE MORROW

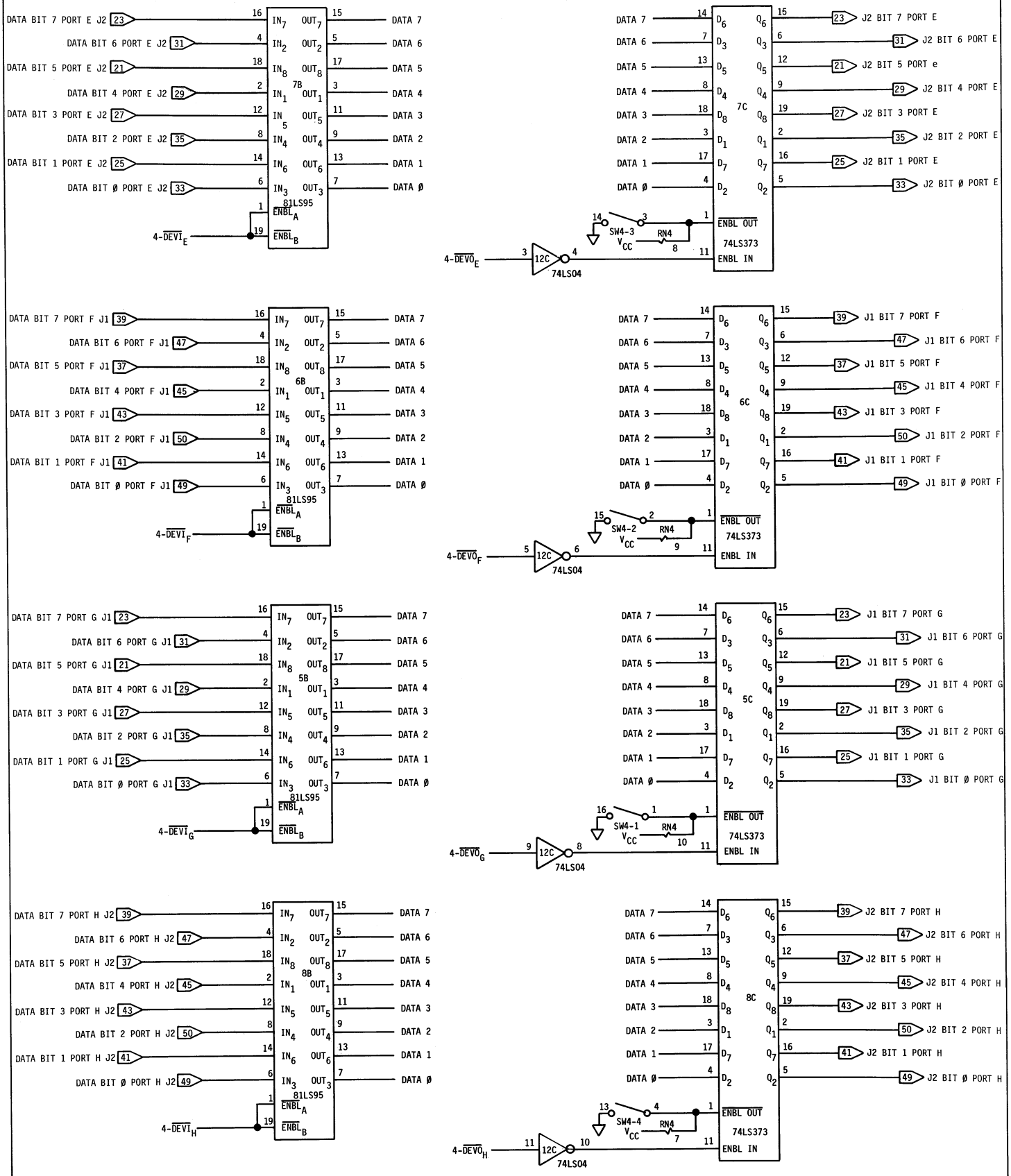

COPYRIGHT 1978 GEORGE MORROW