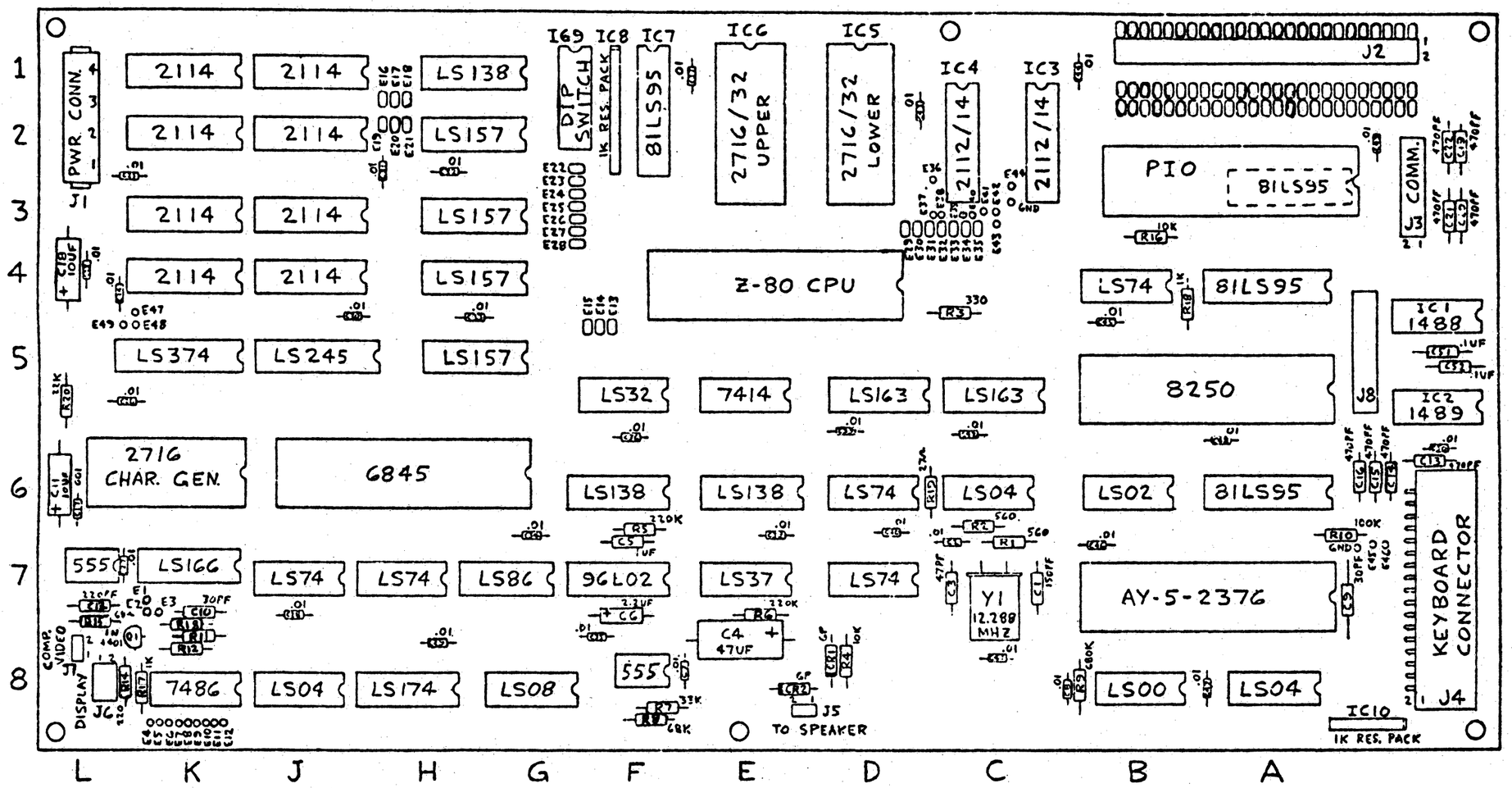

JUMPER POSITIONS

HORIZ SYNC WIDTH	
NORMAL	E1-E2
EXTENDED	E2-E3

SYNC	NORMAL	INVERTED
HORIZ	E7-E8	E6-E7
VERT	E9-E10	E5-E9
VIDEO	E11-E12	E4-E11

PROMS			
SIZE	2K	4K	
SELECT	E13-E14	E14-E15	
	2716	2532	2732
IC5	E29-E30	E29-E30	E30-E31
	E33-E32	E31-E32	E32-E33
	E34-E35	E33-E34	E34-E35
IC6	E22-E23	E22-E23	E23-E24
	E25-E26	E24-E25	E25-E26
	E27-E28	E26-E27	E27-E28

DISPLAY RAM	
2K	E17-E18, E20-E21
4K	E17-E18, E19-E20
8K	E16-E17, E19-E20

CPU RAM		
	2112	2114
IC3 & IC4	E36-GND	E37-E38
	E38-E39	E39-E40
	E41-E42	E42-E43
	E44-GND	

KEYBOARD SHIFT	
ENCODED	E45-E46
SEPARATE	E45-GND

CHARACTER LATCH (5K)	
74LS373	E48-E49
74LS273	E47-E48

POWER CONN.	
J1	VOLTAGES
1	-12
2	GND
3	+5
4	+12

ROMAC™
COMPUTER EQUIPMENT

ASSEMBLY,
TERMINAL LOGIC BOARD

REV. 12-23-80

© ROMAC 1982

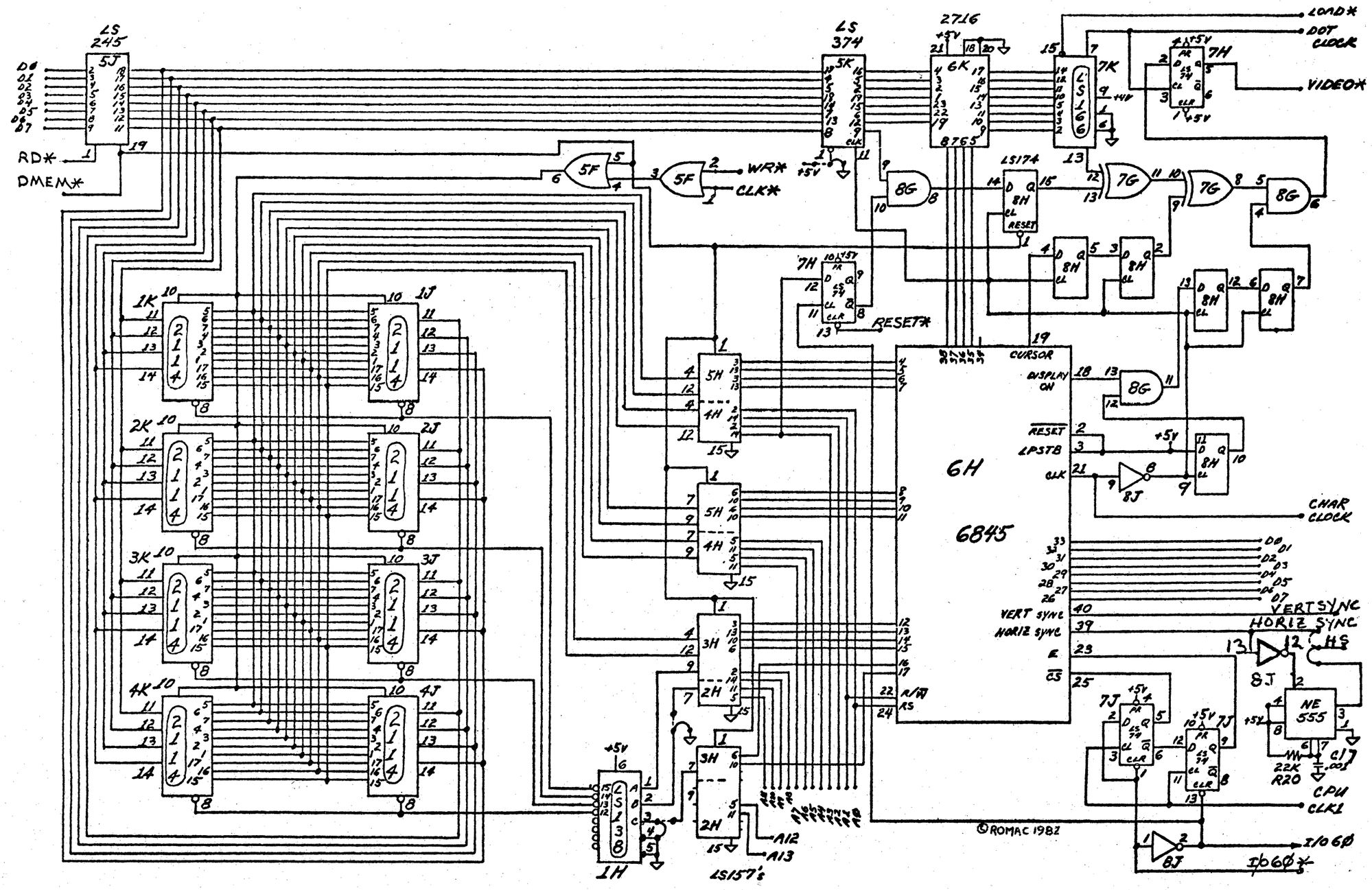
LS 245
5J
D0
D1
D2
D3
D4
D5
D6
D7
RD*
DMEM*
LS 374
5K
2716
6K
7K
LS 166
LOAD*
DOT CLOCK
VIDEO*
7H
WR*
CLK*
5F
8G
LS174
8H
7G
RESET*
1K
2K
3K
4K
1J
2J
3J
4J
5H
4H
3H
2H
1H
LS157's
A12
A13
CURSOR
DISPLAY ON
RESET
LPSTB
CLK
8J
6H
6845
CHAR CLOCK
VERT SYNC
HORIZ SYNC
E
CS
R/W
RS
VERTSYNC
HORIZ SYNC
HS
NE 555
22K
R20
C17
.005
CPU CLK1
I/O 6Ø
I/O 6Ø*
7J
©ROMAC 1982

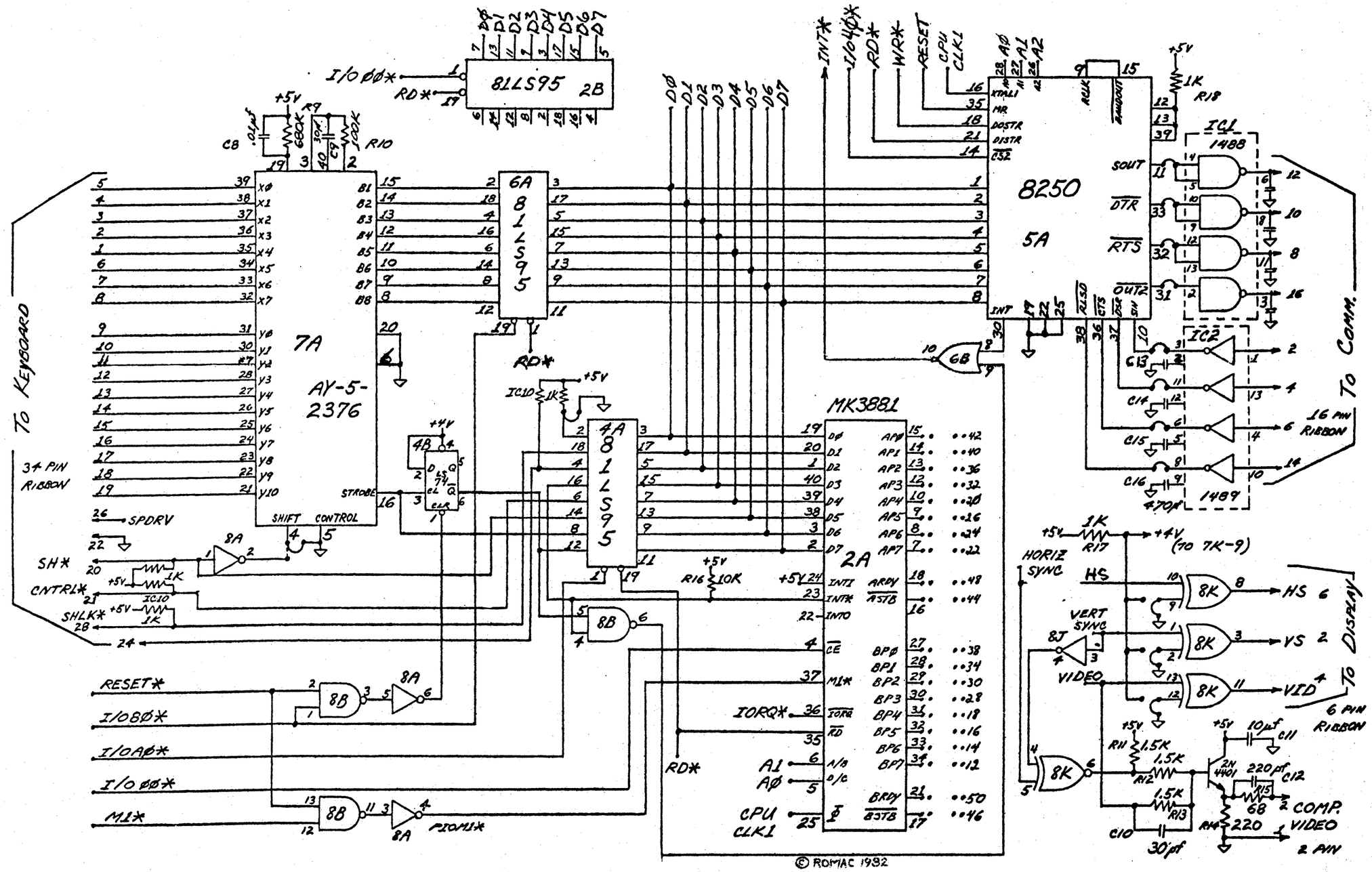
8LLS95 2B
I/O ØØ*
RD*
AY-5-2376
7A
8LLS95 6A
8LLS95 4A
MK3881
2A
8250
5A
IC1 1488
IC2 1489
TO KEYBOARD
34 PIN RIBBON
TO COMM.
16 PIN RIBBON
TO DISPLAY
6 PIN RIBBON
2 PIN
COMP. VIDEO
HORIZ SYNC
VERT SYNC
VIDEO
HS
VS
VID
SHIFT
CONTROL
STROBE
SPDRV
SH*
CNTRL*
SHLK*
RESET*
I/O8Ø*
I/OAØ*
I/O ØØ*
M1*
PIOM1*
IORQ*
CPU CLK1
© ROMAC 1982

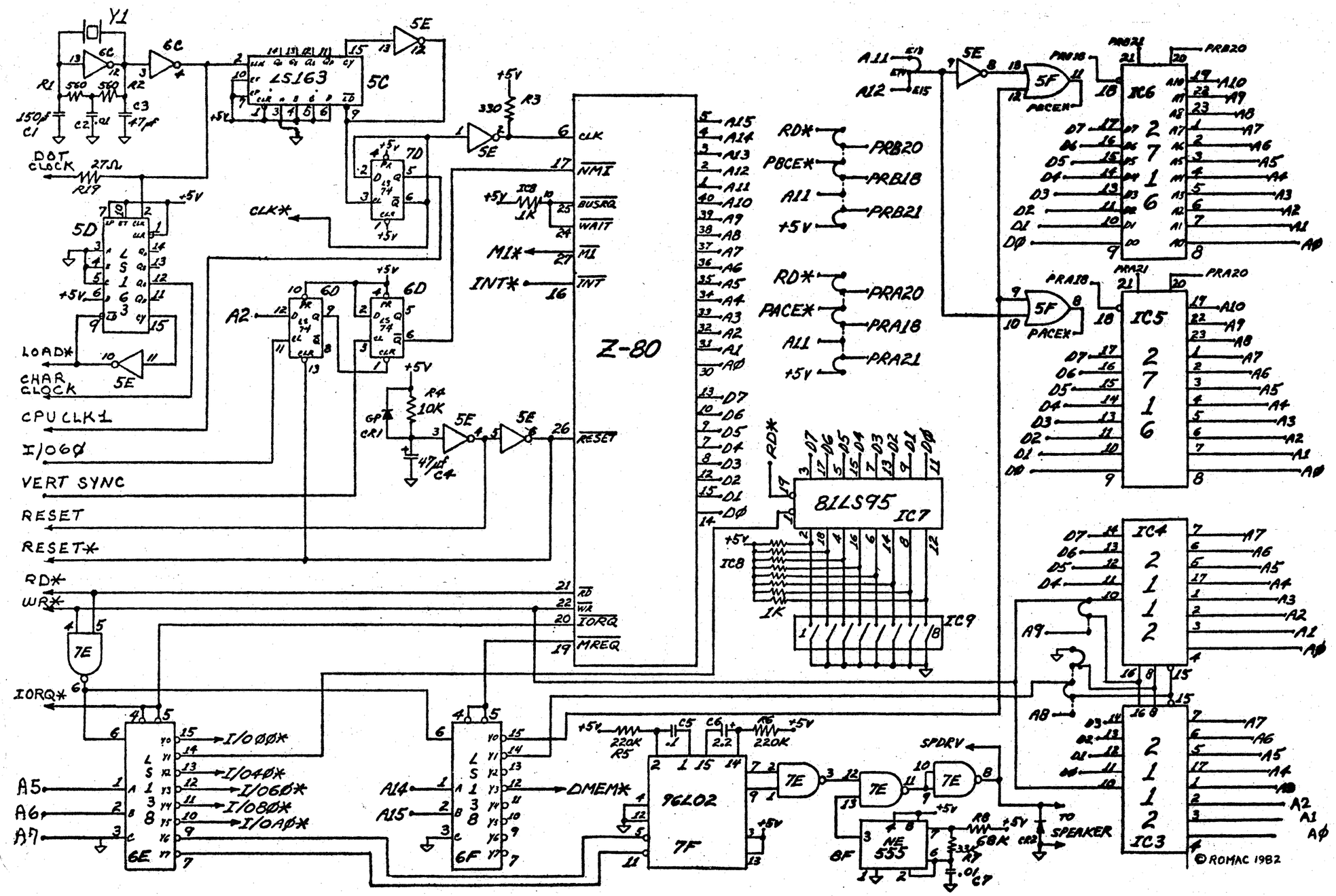
Y1
6C
R1 560 560 R2
C1 150pf
C2
C3 47pf
DOT CLOCK
R19 27Ω
+5V
5D
LS 163
5C
5E
7D
R3 330
CLK*
CLK
NMI
BUSRQ
WAIT
M1*
M1
INT*
INT
IC8 1K
6D
A2
R4 10K
CR1
C4 47µf
RESET
Z-80
LOAD*
CHAR CLOCK
CPU CLK1
I/O6Ø
VERT SYNC
RESET
RESET*
RD*
WR*
IORQ
MREQ
7E
IORQ*
6E
6F
I/OØØ*
I/O4Ø*
I/O6Ø*
I/O8Ø*
I/OAØ*
A5
A6
A7
A14
A15
DMEM*
96LO2
7F
C5 .1
C6 2.2
R5 220K
R6 220K
SPDRV
8F
NE 555
R8 68K
R7 33K
C7 .01
CR2
TO SPEAKER
A11
A12
5F
PACE*
PRB18
PRB21
PRB20
IC6
2716
PRA18
PRA21
PRA20
IC5
8LS95
IC7
IC8
1K
IC9
IC4
2112
A9
A8
IC3
© ROMAC 1982